siniat



blueprint

Lightweight Construction Manual

Version 3 March 2022

etex inspiring ways of living

Disclaimer

Products manufactured and systems designed by Etex Australia Pty Ltd and branded Siniat, are produced in accordance with the Building Code of Australia and relevant Australian Standards. Information in this document is to be used as a guide only and is subject to project approval as many aspects of construction are not comprehensively covered. It is also the responsibility of the project to determine if our products and systems are suitable for the intended application and they meet the relevant building code and project requirements. Etex Australia Pty Ltd will not be held responsible for any claims resulting from the installation of its products or other associated products not in accordance with the recommendations of the manufacturer's technical literature or relevant Australian Standards, or for situations not covered by our certification reports.

Siniat technical information is regularly updated. To ensure this document is current with the latest information, visit **siniat.com.au** or contact Siniat Customer Service Centre on **1300 724 505**

Warranty

Siniat products are guaranteed by a 10 Year Warranty.

Visit **siniat.com.au**

Version 3
March 2022

About Blueprint

Blueprint is a comprehensive technical manual for lightweight construction offering complete Siniat systems.

Blueprint allows you to confidently design project solutions, safe in the knowledge that all Siniat components are covered by our 10 year warranty and that testing and approvals have been conducted on complete Siniat systems.

With Blueprint, everything you need to know to design the best value solution for your project is all in one place; and designing with Blueprint is easy.

Incorporating new and updated complete Siniat systems, Blueprint's clear structure provides the most comprehensive and easy to use technical reference guide for commercial contractors and architects in the application of Siniat wall and ceiling systems.

Siniat Blueprint is part of the Siniat Knowhow suite of tools and technical support services. These are designed to give you full project support and enable us to be part of the solution.

Discover more Siniat Technical Manuals

Discover more technical manuals by clicking on the link or by using your phone's camera on the QR code.

New Content

This version of Blueprint includes the following updates:

- New Section 3.10 Portal Frame Construction Details
- New Section 6.7 Creason Perforated Plasterboard
- New Section 6.8 Createx Perforated Plasterboard
- Update to Section 3.2 Openings in Internal Steel Framed Walls
- Update to Section 5.1 Ceilings
    a. Universal fire rated ceilings range added
    b. 3-hour fire rated ceiling systems added
- Update to Section 5.3 Steel Stud Ceilings
    a. Universal fire rating ceilings range added
    b. New construction details added
- Update to Section 5.4 Shaft Wall Ceiling
    a. New construction details added
- Update to Section 6.4 Column and Beam Fire Protection

Contents

ABOUT US 4

1 SINIAT PRODUCT RANGE 6

2 BUILDING WITH LIGHTWEIGHT CONSTRUCTION 15

SYSTEMS AND INSTALLATION GUIDE 70

3 Internal Walls 71

3.1 Internal Steel Framed Partition Walls 71
3.2 Openings in Internal Steel Framed Walls 193
3.3 Internal Timber Framed Walls 205
3.4 Internal Wet Areas using Plasterboard 249
3.5 Plasterboard with Masonry Walls 259
3.6 Interhome High-Rise Wall 298
3.7 Shaft Wall 322
3.8 Security Walls 337
3.9 Timber Separating Wall Details 339
3.10 Portal Frame Construction Details 351

4 External Walls 361

4.1 External Steel Stud Walls 361
4.2 Openings in External Walls 390
4.3 External Timber Framed Walls 408
4.4 External Steel Girt Walls 432
4.5 Top Hats over Wall Framing 438

5 Ceilings 451

5.1 Ceilings 451
5.2 Ceiling Attenuation Class Systems 529
5.3 Steel Stud Ceilings 540
5.4 Shaft Wall Ceiling 593
5.5 Top Hat Ceilings 607

6 Specialty Systems 613

6.1 Soil and Water Pipe Acoustic Systems 613
6.2 Laminated Vertical Shaft 620
6.4 Column and Beam Fire Protection 626
6.5 Curved Walls and Ceilings 639
6.6 X-Ray Protection Systems 645
6.7 Creason Perforated Plasterboard 659
6.8 Createx Perforated Plasterboard 679

7 FINISHING PLASTERBOARD 707

About Us



The Etex Group

The Etex Group is a global family-owned business based in Belgium with a history going back to 1905. Etex set out with the dream to build light, yet resilient building materials and enabled the business to export smart solutions and inspire better ways of living all over the world.

More than a century later the Etex vision has not changed. Today the Etex Group has grown to a successful "house of brands" and has become home to several known and trusted names such as Siniat, Promat, Equitone and Cedral, to name but a few. The Group employs more than 13,000 employees globally and operates 101 production sites in 42 countries.

The Etex Group is made up of four business divisions:

Building Performance: Drywall systems, plasters and compounds, fibre cement, passive fire protection and associated products

Exteriors: Architectural, residential and agricultural fibre cement materials

Industry: High performance insulation and fire protection solutions for industrial players

New Ways: Specialised in offsite building technologies in both wood and steel framing.

Siniat

Siniat is one of the Etex Group's flagship commercial brands, and one of the leading global manufacturers of interior and exterior materials for drywall construction.

The Etex Group started its own drywall initiative in 1957, but in terms of plasterboard production the true breakthrough came in 2011, when Etex gradually acquired Lafarge plasterboard activities in Europe, Latin America, and Africa and rebranded them Siniat.

The Lafarge acquisition added more than a hundred years of plasterboard technology and know-how, superb innovation capacity and state-of-the-art manufacturing power. Recently, Etex further reinforced Siniat's global leverage by purchasing Knauf Australia.

'We not only guarantee our products for a period of ten years, but extend this warranty to the entire system'

Etex and Siniat in Australia

In 2020 Knauf Australia was purchased by the Etex Group and the name of the company was changed to Etex Australia Pty Ltd. The brand name of all products and services was changed to Siniat.

In Australia, Etex has Siniat manufacturing facilities located in Sydney, Melbourne, Bundaberg and Brisbane and supplies steel framing, plasterboard, compounds, cornice and associated products and systems to the Australian building industry through its national distribution network.

Siniat's comprehensive range of quality wall and ceiling lining products are developed with specific characteristics to enhance performance and provide fire, water, acoustic and decorative solutions to commercial and residential projects.

Our innovative systems are designed to provide 'smart' technology solutions for all projects, backed by an engineering service and access to sophisticated design and specification tools. Siniat provides end-to-end project support, working collaboratively with partners throughout the construction process to find the right solution.

The Siniat team is committed to providing excellent technical service and sales support to continually improve the quality of current products and systems, and to identify innovative products, systems and solutions.

Sustainability

Siniat offers an industry first opt-in carbon neutral program for all locally made plasterboard and metal framing products, thereby providing the opportunity to significantly reduce the carbon footprint of any commercial or residential construction project.

Over the last ten years we have been reducing our carbon emissions and we continue doing so. Carbon neutrality is possible through the offsetting of any remaining emissions so that the net carbon emissions resulting from the manufacture of our products is zero.

All Siniat manufacturing and distribution facilities are also certified to the most current versions of the ISO management system standards for Health & Safety, Quality and Environmental Management: ISO 9001:2015 certification for quality management systems, ISO 14001:2015 certification for environmental management systems and ISO 45001:2018 certification for health & safety management systems.

Warranty

For the ultimate peace of mind, we also offer a unique Siniat Warranty on all our products and systems. We not only guarantee our products for a period of ten years, but extend this warranty to the entire system when Siniat products are installed as a complete system in accordance with our recommendations.

Our Customers

Regardless of the project – Siniat is a true partner for its customers. Whether it's our know-how, our products, our system solutions, our comprehensive consulting services, or our support – everything serves only one purpose: the customer faces a challenge, we find the solutions and we build better, together.

Our People

Etex Teammates are all united through the three Etex company values: Connect and Care, Pioneer to Lead, and a Passion for Excellence.

Employees are encouraged to bring out the best in each other by always caring for each other's safety and well-being. We foster a pioneering spirit and a passion to always do better for our customers and believe that no matter the role, there are no limits to learning.

At Etex our commitment to safety is our highest priority, and nothing is more important than all teammates and customers going home safe – every day.



1 Siniat Product Range



Product Properties

- Fire Resistant
- Water Resistant
- Sound Resistant
- Sound Absorbing
- Impact Resistant
- Interior Design
- Air Purifying
- Mould Resistant
- X-Ray Resistant
- Certified by Global GreenTag to GreenRate Level A

Plasterboard

Name	Thickness (mm)	Width (mm)	Length (mm)							Weight (kg/m²)	Properties
			2400	2700	3000	3600	4200	4800	6000		
mastashield	10	1200	•	•	•	•	•	•	•	6.4	
		1350		◆	•	•	•	•	•		
	13	1200	•	•	•	•	◆	•	•	8.4	
		1350			•	•		•			
spanshield	10	1200			•	•	•	•	•	6.7	
		1350				•		◆	•		
watershield	10	1200	•	•	•	•	•			7.5	
		1350				•		•			
	13	1200		•		•				9.6	
		1350				•					
soundshield	10	1200				•			•	8.4	
		1350				•			•		
	13	1200			•					12.3	
opal	10	1200						•	•	8.4	
		1350						•	•		
curveshield	6.5	1200				•				4.5	
fireshield	13	1200		•	•	•				10.5	
		1350				◆					
	16	1200	◆	◆	•	•				13.0	
		1350				◆					
multishield	13	1200			•	•				10.7	
		1350					•				
	16	1200			•					13.0	
		1350			•						
trurock	13	1200			•	•				12.3	
		1350					•				
	16	1200			•					14.8	
trurock hd	13	1200			•	•				12.3	
shaftliner	25	600			•	◆				20.6	
intershield	25	600			◆	◆				20.6	
GIB **X-Block**®	13	1200			•					15.3	

• Stock item - all states ◆ Stock item in some locations only.
Other sizes and edge types available, minimum order quantity and lead times apply.
Weights indicated are nominal. Check website for the most up to date information.

Perforated Plasterboard

Name	Pattern	Thickness (mm)	Size (mm)	Edge Type	Weight (kg/m²)	Absorption*		Properties
						α_w	NRC	
Createx	Round R8/18	12.5	1200 x 1988	V-edge	10.0	up to 0.7	up to 0.85	
	Round R12/25		1200 x 2000	V-edge	10.0	up to 0.8	up to 0.85	
	Cube C12/25		1200 x 2000	V-edge	10.0	up to 0.9	up to 0.9	
	Dynamic D8-12		1200 x 2000	V-edge	10.0	up to 0.55	up to 0.8	
	Space S8-15-20		1200 x 1950	V-edge	10.0	up to 0.6	up to 0.65	
Creason	Round R12/25 No.8	12.5	1200 x 2400	2 x Recessed	10.0	up to 0.55	up to 0.6	
	Cube C12/25 No.8		1200 x 2400	2 x Recessed	10.0	up to 0.75	up to 0.8	

• Stock item - all states • Non-stock item - minimum order quantity and lead times apply.
Weight indicated are nominal. Check website for the most up to date information.
* Acoustic absorption dependent on cavity depth and insulation.

Fire Resistant
Water Resistant
Sound Resistant
Sound Absorbing
Impact Resistant
Interior Design
Air Purifying
Mould Resistant
X-Ray Resistant
Certified by Global GreenTag to GreenRate Level A

Jointing Compounds and Specialty Plasters

Name	Size	Type	Application			Wet Areas Under Tiles	Fire Rated Systems
			Bedding	Second	Finish		
Bedding Cements							
masta**base**	10 kg bag 20 kg bag	Powder	✓	✓	✗	✓	✓
masta**longset**	20 kg bag	Powder	✓	✓	✗	✓	✓
Finishing Compounds							
masta**glide**	20 kg bucket	Premixed	✗	✗	✓	✗	✓
All Purpose Compounds							
masta**lite**	17 kg bucket	Premixed	✓	✓	✓	✗	✓
masta**line**	20 kg bucket	Premixed	✓	✓	✓	✗	✓
box ready masta**line**	20 kg bucket	Premixed	✓	✓	✓	✗	✓
masta**tape-in**	20 kg bucket	Premixed	✓	✓	✗	✗	✓
masta**coat3**	4 kg bucket	Premixed	✓	✓	✓	✗	✓
Specialty Compounds							
masta**fix20**	10 kg bag	Powder	✓	✓	✓	plus Cornicing and Patching	
masta**block**	20kg bag	Powder	Back-blocking				
X-Ray Protection							
GIB **x-block**®	25 kg bag	Powder	✓	✓	✗	✗	✓

Adhesives

Name	Size	Type	Application
masta**bond**	20 kg bag	Powder	Masonry walls
masta**grip**	600 ml foil tube 1.25 kg bucket 5.2 kg bucket	Acrylic	Timber, treated timber and steel

Paper Tape

Name	Length (m)	Description
masta**mate** paper tape	75	Spark perforated paper tape for bedding coat of plasterboard joints

Sealants

Name	Size	Type	Application
bindex fire and acoustic sealant	600 ml foil tube	Acrylic	Fire and acoustic

Cornice

Name	Width (mm)	Length (mm)					Weight (kg/m)	Profile
		3000	3600	4200	4800	5400		
classiclook	55		•		•	•	0.65	
	75		•		•	•	1.05	
	90	•	•		•	•	1.30	
wavelook	75			•			1.98	
steplook2	50			•			1.57	
steplook3	75			•			2.17	
steplook4	100			•			2.78	
pacificlook	90			•			2.10	
skylook	90			•			1.96	

Plaster Cornice Cements

Name	Size	Type	Setting Time	Application		
			Minutes	Cornicing	Patching	Masonry Adhesive
Cornice Cements						
masta**cove45**	20 kg bag	Powder	45	✓	✓	✓
masta**cove75**	20 kg bag	Powder	75	✓	✓	✓

Studs

Profile		Depth	BMT	Length							
				2400	2700	3000	3600	4200	4800	6000	7200
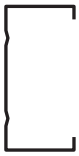	Studs	51	0.5	•	•	•	•				
		64	0.5	•	•	•	•	•	•	◆	
			0.75	◆	•	•	•	•	•	•	
			1.15	◆	•	•	•	◆	•	•	
		76	0.55	•	•	•	•	•	•	◆	
			0.75	◆	•	•	•	•	•	•	
			1.15	◆	•	•	•				
		92	0.55	•	•	•	•	•	•	•	◆
			0.75	•	•	•	•	•	•	•	◆
			1.15	•	•	•	•	•	•	•	◆
		150	0.75		◆	•	•	◆	•	•	◆
			1.15		◆	•	•	◆	•	•	◆
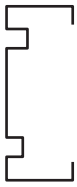	Acoustic Stud	92	0.55	◆	•	•	•	•	◆	◆	
	Jamb Stud	92	1.5*		2800	•	•				

Tracks

Profile		Depth	BMT	Length	
				3000	3600
	Tracks	51	0.5	•	
		64	0.5	•	•
			0.7	•	
			1.15	•	
		76	0.5	•	•
			0.7	•	
			1.15	•	
		92	0.5	•	•
			0.7	•	
			1.15	•	
		150	0.75	•	
			1.15	•	
	Deflection Head Tracks	51	0.55	•	
		64	0.55	•	
			0.7	•	
			1.15	•	
		76	0.55	•	
			0.7	•	
			1.15	•	
		92	0.55	•	
			0.7	•	
			1.15	•	
		150	0.75	•	
			1.15	•	

Slotted Deflection Head Tracks

Profile		Depth	BMT	Length
				3000
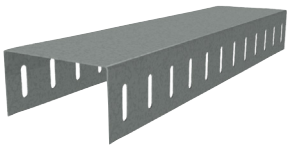	Slotted Deflection Head Tracks	64	0.75	•
			1.15	•
		76	0.75	•
			1.15	•
		92	0.75	•
			1.15	•
		150	1.15	•

Flexible Tracks

Profile		Depth	BMT	Length
				2400
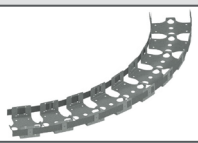	Flexitrack	51	0.55	◆
		64	0.55	•
		76	0.55	◆
		92	0.75	•

Nogging Tracks

Profile	Depth	BMT	Length	Punch Spacing			
			3670	300	400	450	600
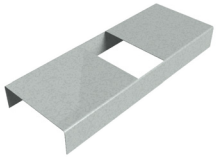	64	0.7	•	◆	◆	•	•
	76	0.7	•	◆	◆	•	•
	92	0.7	•	•	•	•	•
	150	0.7	•	◆	◆	•	•

All dimensions are in mm. • Stock item ◆ Minimum order quantity and lead times apply *High-tensile steel

Top Cross Rails

Profile	Depth	BMT	Length		
			3600	4800	6000
	25	0.75	•	•	•
	38			•	

Curved Top Cross Rail

Profile	Depth	BMT	Length		
			3600	4800	6000
	25	0.75	◆	◆	◆

Furring Channels

Profile		Depth	BMT	Length					
				2400	2700	3000	3600	4800	6000
	Furring Channel	28	0.42*	•	•	•	•	•	•
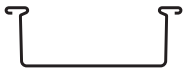	Wide Furring Channel	28	0.42*				•	•	•
	Furring Channel	18	0.42*	•	•	•	•	•	•
	Recessed Furring Channel	13	0.5						◆
	Curved Furring Channel	18	0.42*	◆	◆	◆	◆	◆	◆

Furring Channel Tracks

Profile	Depth	BMT	Length
			3000
	28	0.5	•
	18		•

Battens

Profile		Depth	Width	BMT	Length			
					300	4800	6000	6100
	Domestic Batten	16	35	0.38*		•	•	
	Back Blocking Batten	16	35	0.38*	•			
	Cyclonic Batten	22	30	0.42*				•
	Batten	35	35	0.42*		◆	◆	

Top Hats

Profile	Width	Depth	BMT	Length		
				3600	6000	7200
	50	15	0.75	•		
		25		•		
		35		•	•	•
		50		•		
	50	15	1.15	•	•	
		25		•	•	
		35		•	•	•
		50			◆	◆
	75	35	1.15	◆	◆	◆
	120	35	1.15		•	•

Steel Angles

Profile		Width	BMT	Length			
				1800	2400	3000	3600
	Backing Angles	35 x 35	0.7			•	•
		50 x 50	0.7			•	•
			1.15			•	
		75 x 75	1.15			•	
		100 x 100	1.15			◆	
	Utility Angles	28 x 28	0.3		•		
		40 x 40	0.3	•			

Top Hat Cleats

Profile	Width	Depth	BMT
	50	27 ◆	2.00
		37 •	
		52 ◆	
	75	37 ◆	
		52 ◆	

All dimensions are in mm. • Stock item ◆ Minimum order quantity and lead times apply

Stopping Beads and Angles

Profile	Description	Depth	BMT	Length				
				2400	2550	2700	3000	3600
	External 90 Angle	30	0.38	•	•	•	•	•
	External 135 Angle			•		•	•	◆
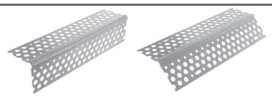	Internal 90 Angle	30	0.38	•		•	•	•
	Internal 135 Angle			•		•	•	◆
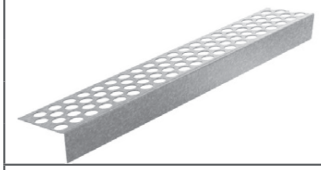	Stopping Angle	10	0.38				•	
		13					•	
		16					•	
		20					•	
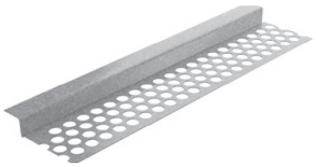	Shadowline Stopping Angle	6	0.3				◆	
		10	0.38				•	
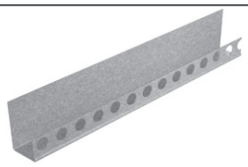	Plaster Stopping Bead	6	0.5				◆	
		10					•	
		13					•	
		16					◆	
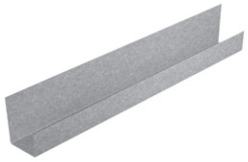	Plaster Casing Bead	6	0.5				◆	
		10					•	
		13					•	
		16					◆	
	ArchWay Bead	10	0.38				•	

Render Beads

Profile	Description	Depth	BMT	Length			
				2400	2700	2800	3000
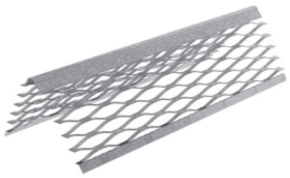	Render Bead 1.5	32	0.38	•	•		•
	Render Bead 2.5	55	0.55	•		•	
	Render Bead 4.5			•		•	

Access Panels

Profile	Description	Sizes
	Metal Door Slimline - Set Bead or Flanged	200 x 200 •
		300 x 300 •
		450 x 450 •
		530 x 530 •
		600 x 600 •

All dimensions are in mm. • Stock item • Minimum order quantity and lead times apply

2 Building with Lightweight Construction



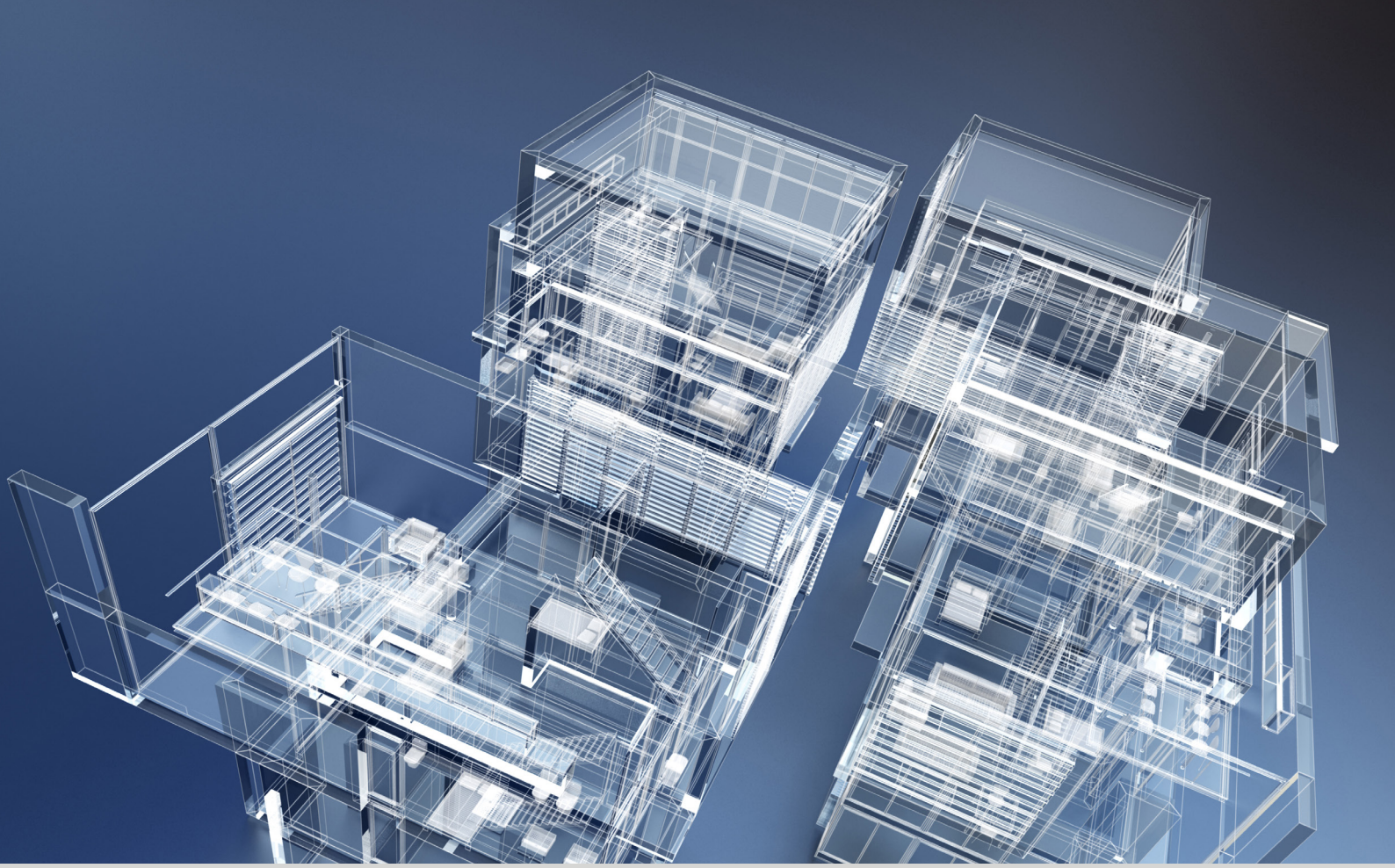

BUILDING WITH LIGHTWEIGHT CONSTRUCTION 17

BENEFITS OF LIGHTWEIGHT CONSTRUCTION 17

2.1 MATERIALS 17

PLASTERBOARD 17

STEEL FRAMING 20

TIMBER 23

CEMENT BOARD 23

FIBRE CEMENT 24

INSULATION 25

WALL WRAPS AND ROOF SARKING 26

GENERAL TAPES FOR BUILDING BLANKETS AND VAPOUR PERMEABLE SARKINGS 26

THERMAL BREAK STRIP 26

ACOUSTIC PIPE WRAPPING 26

LOADED VINYL BARRIER 26

FIRE STOPPING 26

FASTENERS AND ANCHORS 27

SCREW ANCHORS 29

2.2 CARE AND USE 32

STORAGE, DELIVERY AND HANDLING 32

WEATHER PROTECTION 33

CONDENSATION AND VENTILATION 33

EXPOSURE TO HIGH HUMIDITY 34

EXPOSURE TO WATER 34

EXPOSURE TO EXCESSIVE HEAT 34

2.3 BUILDING REQUIREMENTS AND SOLUTIONS 35

STRUCTURAL FRAME DESIGN FOR LIGHTWEIGHT SYSTEMS 36

WIND LOADS 36

SEISMIC ACTIONS 45

STRUCTURAL ANALYSIS 47

FIRE RESISTANCE 48

ACOUSTICS 54

SOUND INSULATION 55

SOUND ABSORPTION 59

SOUND REFLECTION AND DIFFUSION 60

REVERBERATION TIME (RT) 60

THERMAL PERFORMANCE 62

WET AREAS 66

IMPACT RESISTANCE 67

X-RAY RESISTANCE 69

Building with Lightweight Construction

Etex Australia offers a wide range of solutions for lightweight construction including metal framing, insulation, plasterboard linings, cement board linings, ceiling tiles, adhesives, jointing compounds, fire sealant and cornice.

Siniat wall and ceiling linings are available with a wide range of properties for different applications from impact resistant plasterboard to aesthetic ceiling linings that absorb sound.

Along with providing these solutions, Siniat offers a suite of Knowhow services to help bring your project to life from instant online calculators and system selectors to personal technical advice and all backed by a 10 year Siniat warranty.

Benefits of Lightweight Construction

When combined together, lightweight materials provide effective composite performance; the result is a vast range of combinations so the desired performance can be tailor made for construction. Lightweight construction is so called because it can achieve heavy weight performance while decreasing the weight and cost of the entire building.

A typical lightweight wall construction consists of either steel or timber framing, insulation and plasterboard or other lining board.

Siniat steel studs are an efficient way of providing framing for plasterboard and other lining materials.

Combine with Fletcher Insulation's acoustic and thermal insulation to enhance the performance of walls and ceilings.

2.1 Materials

Plasterboard

Plasterboard is made from a core of a naturally occurring mineral called gypsum, also known as calcium sulphate dihydrate or $CaSO_4.2H_2O$. The core is sandwiched between two layers of heavy duty recycled paper. The face paper is suitable for painting or wallpaper. Plasterboard has square profile cut ends and long recessed edges to enable easy jointing.

Etex Australia manufactures plasterboard to strict internal standards which meet or exceed the requirements of *AS/NZS 2588:2018, Gypsum Plasterboard.*

The Australian Standard for plasterboard installation is *AS/NZS 2589:2017, Gypsum linings – Application and finishing.*

Plasterboard is suitable for use as an interior wall and ceiling lining, and also for external ceilings when protected from the weather. For more information about the suitability of plasterboard, please refer to Section 2.2 Care and Use.

Environment Benefits

Plasterboard is an ideal product for sustainable construction. As a lightweight building material, plasterboard reduces transport costs and emissions as well as the total weight of buildings. Plasterboard is 100% recyclable, with low embodied energy, and made largely from a naturally occurring mineral – gypsum. The liner paper used to make plasterboard is biodegradable and made from recycled paper such as waste newspaper and cardboard.

The plasterboard manufacturing process operates under strict environmental guidelines:

- Efficient use of energy and water including heat recovery and storm water collection
- Effective collection and monitoring of dust.
- Ongoing waste and raw material usage reduction.
- Minimisation of plant impact on surroundings.

Since 2009, Etex Australia has introduced a number of initiatives to reduce carbon emissions which has also resulted in the first certified carbon neutral opt in program for plasterboard.

Combining plasterboard with lightweight framing such as timber or steel provides a vast array of system performances, which can be efficiently gauged to the precise needs of any project.

Lightweight steel framing is both strong and durable, and like plasterboard has the potential to be fully recycled at end of life.

For more information refer to:
siniat.com.au/sustainability

Fire Resistance

All plasterboard is naturally fire resistant. The core slows down the spread of fire by releasing chemically bound water when heated. This is a similar process to evaporation and aids cooling.

Fire Hazard Properties

The National Construction Code (NCC) regulates the fire hazard properties of coverings and lining materials in buildings according to NCC Volume One, Specification C1.10. Floor linings and coverings must have a high enough critical radiant flux to comply with NCC Volume One, Specification C1.10, while wall and ceiling linings must have a low enough group number. The group number indicates how quickly wall and ceiling linings spread fire, with Group 1 products ranked the slowest and Group 4 the fastest.

Table 1 Product Group Number

Product	Group Number	Average Specific Extinction Area (m^2/kg)
Curveshield	1	less than 250
Creason	1	less than 250
Createx	1	less than 250
Fireshield	1	less than 250
Intershield	1	less than 250
Mastashield	1	less than 250
Multishield	1	less than 250
Opal	1	less than 250
Permarock	1	less than 250
Shaftliner	1	less than 250
Soundshield	1	less than 250
Spangrid - Paper faced	1	less than 250
Spangrid – Protech ceiling panel	2	less than 250
Spanshield	1	less than 250
Trurock	1	less than 250
Trurock HD	1	less than 250
Watershield	1	less than 250

Fire Hazard Property Report

Down the Siniat Fire Hazard Property Report from our 'Certificates' web page by clicking on the link or by using your phone's camera on the QR code.

Combustibility

Plasterboard is considered to limit the spread of fire; therefore in accordance with NCC Volume One, Section C1.9 (e) (i), plasterboard may be used wherever non-combustible materials are required.

Thermal 'R' Value

The R-Value of plasterboard is a measure of its thermal insulation ability. Higher numbers indicate a better insulator. The values for plasterboard are:

- 10mm plasterboard = 0.059 m^2.K/W
- 13mm plasterboard = 0.076 m^2.K/W
- 16mm plasterboard = 0.094 m^2.K/W

Specific Heat Capacity

Specific heat capacity is the amount of heat energy required to raise the temperature of 1 kg of material by 1°C.

- Plasterboard is 1090 J/kg/K.

Dimensional Stability

Plasterboard is dimensionally stable when compared to other building materials. Two measures of dimensional stability are listed below:

- Thermal coefficient of linear expansion (α) = 16.7 x 10^{-6} m / °C, measured unrestrained over the temperature range of 3°C – 32°C
- Hygrometric coefficient of expansion = 6.5 x 10^{-6} / %RH, measured unrestrained over the Relative Humidity (RH) range of 10% – 90%.

Safety

Plasterboard is not classified as hazardous according to the criteria of Safe Work Australia. It is non-toxic and non-flammable.

Maintenance

Plasterboard is a product that is typically installed as a substrate for further decoration like painting, wall paper or tiles. As such, the requirements for maintenance of plasterboard are usually less compared to the decorative finish.

Where paint is used as the decorative finish, the paint manufacturer's recommendations should be followed for maintenance and cleaning. Similarly, if wall paper or tiles are used then recommendations from the manufacturer should be followed. This relates to the cleaning procedures and the suitable materials/ products that should be used.

Maintenance of plasterboard is likely to be necessary only as required. Otherwise, annual checks are recommended on wall and ceiling systems to assess whether maintenance is required for:

- Physical damage (dents, scratches)
- Structural damage (cracks, compression fractures)
- Fire or excessive heat damage
- Water damage (including moisture affected plasterboard and mould growth, etc)
- Re-painting (as and when desired)
- Cleaning (as and when desired)

If repairs are required, then they must be conducted in a way that maintains the installation requirements of *AS/NZS 2589:2017 Gypsum Linings – Application and Finishing, AS 2785-2020 Suspended Ceilings - Design and installation*, and for fire rated systems in accordance with Siniat technical literature.

OnBoard - Maintaining Plasterboard

Read Siniat OnBoard Technical Newsletter on Maintaining Plasterboard by clicking on the link or by using your phone's camera on the QR code.

Durability

The durability of Siniat plasterboard and its ability to perform as a wall or ceiling lining depends on several factors, some include:

- Ventilation of the building (and HVAC system) with the ability to control moisture and condensation
- Amount of humidity and air flow
- Decorative covering (paint, wall paper, tiles)
- Use of building wall wraps, roof sarking and vapour barriers
- Frequency and duration of wet and damp conditions (ie. water leaks)
- Mould growth
- Temperature range experienced
- Movement from substrate framing
- Allowance for framing movement (with control joints)
- Maintenance intervals.

Steel Framing

Siniat light-weight steel framing is an economical, durable and efficient way of providing the necessary support for a range of internal wall and ceiling linings as well as external cladding and brick veneer. Etex Australia manufactures a comprehensive range of steel framing components for a range of systems including:

- Non-load bearing steel stud wall framing
- Concealed and exposed ceiling framing with associated clips
- Steel stud ceilings
- Top hat and façade systems
- Jamb stud and associated brackets for openings in walls
- Acoustic studs
- Access panels, and
- Plaster finishing accessories.

Bluescope Steel is our supplier of large steel coils which are slit, then cold rolled to form the Siniat steel profiles in our manufacturing plant in Beenleigh, Queensland. The steel coils comply with:

- *AS/NZS 1365:1996 Tolerances for flat-rolled steel products*, and
- *AS 1397: 2011 Continuous hot-dip metallic coated steel sheet and strip - Coatings of zinc and zinc alloyed with aluminium and magnesium.*

Certification for systems in Blueprint have been based upon Siniat branded steel products. If other manufacturer's products have been used for the framing, it is the responsibility of that manufacturer to prove equivalent performance of the system and provide the associated certification.

Combustibility

Steel is considered to limit the spread of fire; therefore in accordance with NCC Volume One, Section C1.9 (e) (v), steel may be used wherever non-combustible materials are required.

Early Fire Hazard Indices

Ignitability Index (0-20)	Spread of Flame Index (0-10)	Heat Evolved Index (0-10)	Smoke Developed Index (1-10)
0	0	0	2

1. Zincalume steel
2. Test certificate FNE11602

Safety

Not classified as hazardous according to the criteria of Safe Work Australia. It is non-toxic and non-flammable.

Corrosion Protection

Siniat steel framing has a corrosion protection coating applied to the surface for enhanced durability. Etex Australia supplies Siniat branded products with the following corrosion protection:

- Zincalume® AM150 and AM125 (aluminium / zinc / magnesium) as per AS 1397 for wall studs, top and bottom tracks, wall noggings, furring channels, top cross rails, top hats and most accessories other than listed below.
- Galvaspan® Z350 (zinc) as per AS 1397 for Jamb Stud.
- Galvanised Z275 (zinc) as per AS1397 for ceiling hanging rods, and the following wall framing brackets: UB80, DB and JSCB.
- Zinc electroplated with clear passivate (Class 1 designation A trivalent chromate) for the following clips C24, C54, C60, C60DF, C60LDF, C61S, C66.

Table 2 Steel Grade and Corrosion Protection Coating

Profile	Grade	Ultimate Stress (MPa)	Yield Stress (MPa)	Coating
Studs, Head and Base Tracks, Nogging Tracks, Top Hats, Top Cross Rails	G300	340	300	AM150 / AM125
Furring Channel, Domestic Batten	G550	550	550	AM150
Jamb Stud	G450	480	450	Z350
Hanging rods and brackets: UB60, UB80, DB, JSCB	G250	320	250	Z275

Durability

The durability of Siniat steel products and their ability to perform the intended function for a particular application depends on the severity of exposure. There are many factors related to the severity of exposure, some include:

- Geographical location (ie: near breaking surf or near heavy industry)
- Location on a building
- Construction system the product is used in
- Use of building wall wraps, roof sarking and vapour barriers
- Type of external cladding / roof lining used
- Ventilation of the building (and HVAC system) with the ability to control moisture and condensation
- Amount of humidity and air flow
- Exposure to salt and chlorine laden air
- Frequency and duration of wet and damp conditions (ie. water leaks)
- Horizontal surfaces where water, dust or other contaminants like salt may pool
- The ability of the member to be cleaned by rainwater or hosing
- Maintenance intervals.

Siniat steel framing must be effectively separated from the external environment once installed. In addition, they must be installed to enable drying and prevent long periods of wetness. Extended exposure to high moisture may lead to some level of surface corrosion or staining, as such a regular inspection and maintenance schedule is recommended.

For applications not covered in this manual, additional corrosion protection coatings may need to be applied for certain applications or to prolong the intended service life. Siniat steel products do have industry leading factory applied corrosion protection, and they may be suited to other applications not listed in this section. Please consult a corrosion expert for advice.

Table 3 Suitability of Siniat Zincalume® Steel Products

Application		Geographical Location	
		Further than 300m from breaking surf and above 50m from calm salt water.	Between 100 – 300m from breaking surf, and between 10 – 50m from calm salt water.
Walls	Internal wall framing	✓	✓*
	Internal wall framing for a building with outer wall wrap	✓	✓*
	External wall framing (including top hats) behind external cladding	✓	✗
	External wall framing (including top-hats) behind wall wrap and external cladding	✓	✓
	Vertical top hats outside of outer wall wrap but under external cladding with a drained and vented cavity	✓	✓#
Ceilings	Ceiling framing under a concrete slab	✓	✓*
	Ceiling framing under a roof	✓	✗

* Based on full internal encapsulation with no uninhibited air flow from outside of the building envelope.
# Performance is expected to vary based on the type of external cladding used.

1. Table applicable to all Siniat Zincalume® coated steel products for a minimum expected life of 15 years under normal conditions (excluding indoor swimming pools and spas). Actual service life may increase or decrease depending the factors outlined in the section titled '*Durability*'.
2. All galvanised products must be used further than 300m from breaking surf and further than 50m from calm salt water.
3. Water must not be permitted to pool on surfaces and must be designed and installed to drain freely.
4. The outer wall wrap and roof sarking must be suited to the climate zone.
5. Foil backed insulation must be used under a metal roof to prevent condensation forming on the roof sheeting.
6. Regular recorded inspections must be conducted with any rectification measures actioned.
7. Fasteners/Anchors must have a suitable corrosion protection coating to match the application (ie: Class 1 or 2 for internal use, or Class 3 or greater for within 300m of breaking surf) or an applied coating for protection. Note that stainless steel screws are not recommended with Siniat steel framing.
8. Refer to 'Intensive Animal Farming and Industrial Buildings' and 'Indoor Swimming Pools and Spas' sections for further restrictions.

Corrosivity Zones

AS 4312-2019 Atmospheric corrosivity zones in Australia, classifies geographical zones within Australia based upon the theoretical first year atmospheric corrosion rate of mild steel open to exposure.

Actual corrosion rates depend on the severity of exposure, and these zones are a practical indication of the potential severity of the location to corrosion. This standard does not indicate which corrosion protection coatings must be used for certain locations.

As Siniat steel profiles must be effectively separated from the external environment once installed, the corrosivity zones are much less relevant. Refer to Table 3 for the use of Siniat products for the geographical location and intended application.

Intensive Animal Farming and Industrial Buildings

Certain micro environments have been found to be particularly corrosive such as intensive animal farming buildings. These buildings create an environment with high concentrations of sulphur and ammonia and as such are not suitable with Siniat steel products without the application of additional corrosion protection measures.

Industrial buildings and the like, and surrounding locations that are subject to heavy dust emissions, excessive heat, excessive moisture, corrosive chemicals or acids, fertilizer manufacturing and storage, near the combustion of fossil fuels are also micro environments which will require further advice before the use of Siniat steel products.

Please consult a corrosion expert for advice for these applications.

Indoor Swimming Pools and Spas

The overall design and maintenance plan of a facility affects the long term durability of the building products used in the construction. Other factors like humidity levels, ventilation, temperature, chemical cleaning treatment (chlorine) and proximity of the pool to walls and ceilings also affect durability. Although these factors are outside the control of Etex Australia (Siniat), they are critical to protecting steel framing from the corrosive atmosphere of an indoor swimming pool and spa.

Individual site conditions may require specific measures therefore consultants such as HVAC specialists, corrosion experts and building physicists are recommended.

Minimum requirements to use Siniat AM125, AM150 or Z275 coated steel products for concealed indoor swimming pool wall and ceiling framing:

- A slight negative pressure must be maintained in the pool room relative to the wall and ceiling spaces. This reduces the driving force of moisture into the wall or ceiling cavity where the framing is located.
- Ventilation systems must continuously circulate air and be vented to the outside only. The ceiling plenum must not be used for return air.
- Use a minimum of Class 3 corrosion resistant screws appropriate for the lining and also compatible with the steel framing. Please note that stainless steel screws are not recommended with Siniat steel framing.
- Vapour barriers between the wall and ceiling framing and the indoor pool room must be continuous and sealed at all joints and penetrations. Any following trades must re-seal any penetrations in the vapour barriers. The purpose of the vapour barrier is to prevent water vapour from the swimming pool or spa passing through the wall or ceiling lining into the cavity, where it may turn into condensation (liquid form).
- Allow wall and ceiling cavities to dry by using ventilation to the outside and vapour permeable membranes under any external claddings.
- Thermal insulation with vapour barrier must be installed under sheet roofing. This is to prevent condensation dripping onto the steel framing. Sarking must be installed under tiled roofs to reduce pressure fluctuations within the roof space which may draw air in from the pool area.
- Periodically inspect the steel framing for the appearance of rust and replace if detected or consult a corrosion specialist.

Zinc electroplated ceiling clips are not recommended for use in indoor swimming pools.

Dissimilar Metals

When dissimilar metals (active and noble metals) come into contact along with the presence of an electrolyte such as water they corrode via galvanic action. This is also known as galvanic corrosion or bi-metallic corrosion.

Copper, stainless steel, brass and lead are just some of the metals that can cause galvanic corrosion when in contact with Zincalume®, Galvaspan® or galvanised steel. Therefore, copper pipes, lead flashing and the like must not come in direct contact with Siniat steel products. Also any water flowing from lead flashing or copper pipes onto Siniat steel products shall be prevented.

Table 4 Compatibility of Siniat Steel

Coating / Metal	AM150 / AM125	Z275 Z350
Zinc (Z), Aluminium/Zinc (AZ), Aluminium/Zinc/ Magnesium (AM, ZAM)	Compatible	Compatible
Aluminium	Compatible	Compatible
Copper, Stainless Steel or Zinc Nickel coated steel	Not suitable	Not suitable

Termite Treated Timbers

Green timber and Copper Chrome Arsenic (CCA) treated timbers must not come into direct contact with Siniat steel products. Either they must be isolated or an alternative kiln dried timber treatment compatible with galvanised or Zincalume® corrosion protection must be used.

Thermal

Steel conducts heat so a thermal break is needed when steel studs are used to construct external walls. Refer to the NCC for more details.

Specific Heat Capacity

Steel is 490 J/kg/K.

Dimensional Stability

Thermal coefficient of linear expansion (α) = 12 x 10^{-6} m / °C, measured unrestrained at a temperature of 25 °C

Maintenance

Maintenance can help extend the service life of steel framing and it is likely to be necessary only as required. Annual checks are recommended on wall, ceiling and facade systems to assess whether maintenance is required for:

- Physical damage
- Fire or excessive heat damage
- Corrosion
- Cleaning (as and when desired)

If repairs are required, then they must be conducted in a way that maintains the structural integrity of the original frame. Also, if new materials are introduced with any repairs then they must be compatible with the existing framing.

Timber

Unless otherwise stated, timber components used in the systems in this manual were designed using grade MGP10 timber.

Timber is a natural product and its dimensions vary with changes in surrounding moisture. Timber should be allowed to reach equilibrium with its surroundings before lining it with plasterboard. The equilibrium moisture content of timber is usually 10 -14%.

Cement Board

Where extreme water resistance is required, Permarock is a solid, engineered wall and ceiling lining made from inorganic aggregated cement with glass fibre mesh embedded in both the face and back. Available for both indoor and outdoor application, it is the ideal tile substrate and provides a solid and dry foundation for external rendered and painted facades.

Fibre Cement

Systems in Blueprint that include fibre cement were tested and evaluated using James Hardie™ fibre cement products.

James Hardie™ manufacturers fibre cement to the requirements of *AS/NZS 2908.2 Cellulose-Cement Products Flat Sheets.*

Table 5 Fibre Cement Internal Linings used in Fire Rated Systems

Product	Thickness (mm)	Weight (kg/m²)
Villaboard™	6	8.3
	9	12.4
	12	16.6

Table 6 Recommended Fibre Cement Cladding for External Wall Systems

Product	Thickness (mm)	Weight (kg/m²)
ExoTec™	9	16.3
	12	21.9
ExoTec Vero™	9	16.3
Hardie™ Fine Texture Cladding	8.5	12.5
Hardie™ Flex Sheet	4.5	6.5
	6	8.7
EasyLap™ Panel	8.5	12.5
Axon™ Cladding	9	12.5
Matrix™ Cladding	8	12.6
Stria™ Cladding	14	18.9
	16	21.6
Hardie™ Plank weatherboard	7.5	10 - 11.8
Linea™ weatherboard	16	21.1
Primeline™ weatherboard	9	13.2

For further information on James Hardie™ products please use the link below.

Insulation

Bulk insulation is one of the most cost effective and efficient methods of providing acoustic and thermal comfort and is generally included in light-weight construction systems.

Fletcher Insulation® provides a range of acoustic and energy efficient thermal solutions for the residential, commercial and industrial sectors. Fletcher Insulation® manufactures insulation to the requirements of *AS/NZS 4859.1, Materials used in the Thermal Insulation of Buildings*, and have been tested and certified to relevant Australian Standards ensuring compliance with the National Construction Code (NCC) of Australia.

With a history dating back over half a century, Fletcher Insulation® is a leading insulation manufacturer and distributor of insulation and building membranes in Australia. Supplying renowned brands such as Pink® Batts and Sisalation®, Fletcher Insulation® delivers leading insulation solutions designed for residential homes, commercial buildings as well as HVAC applications. With a national sales and distribution footprint to support our Australian manufacturing facilities, Fletcher Insulation® prides itself on providing first-class products backed by leading edge technical support. For more information contact Fletcher Insulation® directly on 1300 654 444 or visit www.insulation.com.au

Certification for systems in Blueprint have been based upon the insulation products from Fletcher Insulation® and are summarised in Table 7.

Table 7 Insulation used in Blueprint

Insulation
Pink® Partition 25mm 24kg/m³ R0.7
Pink® Partition 50mm 11kg/m³ R1.2
Pink® Partition 50mm 14kg/m³ R1.3
Pink® Partition 75mm 11kg/m³ R1.8
Pink® Partition 75mm 14kg/m³ R1.9
Pink® Partition 90mm 14kg/m³ R2.2
Pink® Partition 110mm 11kg/m³ R2.5
Pink® Batts Wall R1.5
Pink® Batts Wall R2.0
Pink® Batts Wall R2.0HD
Pink® Batts Ceiling R2.5
Polyester R1.5
Polyester Batts Ceiling R2.5

Glasswool insulation in system tables with a nominated R-Value have no restrictions on density or thickness. It is recommended to not compress insulation to less than 85% of its original designated thickness when insulation is used for acoustic performance only. Where insulation is utilised for thermal performance, no compression is permitted.

Insulation products nominated in system tables are the minimum required to meet the acoustic rating. Insulation with higher R-value may be required to meet the desired system R-value.

Fletcher insulation also offers a technical design service that can help predict the thermal and acoustic performance of systems.

Fletcher insulation has developed FletcherSpec™ Pro that is a thermal prediction calculator that can be used to determine the overall thermal performance of roof and walling systems and verifies performance against the NCC. Please click here for access to FletcherSpec™ Pro.

Fletcher Insulation® provides a comprehensive range of bulk insulation products including:

- Pink® Partition
- Pink® Batts: Wall
- Pink® Batts: Ceiling
- Pink® Batts: Floor
- Pink® Soundbreak™
- Pink® Building Blanket
- Pink® Partition HD Panels
- Permastop® Building Blanket
- Permatuff® Building Blanket
- Permastop® Tropic Building Blanket
- Pink® EmberGuard™ Building Blanket
- Polyester Batts: Wall
- Polyester Batts: Ceiling
- Polyester Batts: Underfloor
- Polyester Batts: Acoustic
- Polyester Acoustic Partition Blanket
- Fire Stop (Party Wall Batts)
- Pink® Thermal Slab
- Pink® NoiseSTOP™ with Durasorb® Facing
- Pink® SonoBatt Blanket

Wall Wraps and Roof Sarking

Where products are required for vapour control or airflow, the following products are recommended:

- Sisalation® Vapawrap™ Residential Wall Wrap
- Sisalation® Tuff Wrap™ Wall Wrap Standard (497)
- Sisalation® Tuff Wrap™ Wall Wrap Breather (497)
- Sisalation® Multipurpose EHD (456)
- HardieWrap™ Weather Barrier
- Sisalation® Vapawrap™ Vapour Permeable Metal Roof
- Sisalation® Metal Roof Medium Duty (433)
- Sisalation® Metal Roof Heavy Duty (453)

Fletcher Insulation can assist with condensation modelling and provide advice on the right products to use by climate zone to meet the needs of the NCC. Please contact Fletcher Insulation for assistance on 1300 654 444.

General Tapes for Building Blankets and Vapour Permeable Sarkings

Vapastop® 883 Tape is recommended for use with building blankets and foil faced sarking and wall membranes.

3M Seaming Tape is recommended for use with Sisalation Vapour Permeable membranes.

Thermal Break Strip

Thermal break tapes are required by the NCC to isolate steel wall and roof framing. The following thermal break products are recommended to isolate steel wall and roof framing:

- HardieBreak™ Thermal Strip
- Thermatape™ Thermal Break Strip

Refer to FletcherSpec™ Pro modelling software that can predict performance of thermal systems inclusive of thermal break. Please click here for access to Fletcher Spec™ Pro

Acoustic Pipe Wrapping

Soundlag 4525C (5 kg/m^2) acoustic pipe wrapping is recommended for the sound protection of ducts, rainwater or waste pipes.

Loaded Vinyl Barrier

Quadzero™ Loaded Vinyl Barrier is recommended where additional acoustic performance is required.

Fire Stopping

The following products are recommend for the fire protection of openings and service penetrations in Siniat plasterboard wall and ceiling systems.

- Siniat Bindex Fire and Acoustic Sealant
- Promat PROMASEAL® Retrofit Collars
- Promat PROMASEAL® Wall Collars FCW
- Promat PROMASTOP® UniCollar®
- Promat PROMASEAL® Conduit Collar
- Promat PROMASEAL® Flexiwrap
- Promat PROMASEAL® Bulkhead Batts
- Promat PROMASEAL® Supawrap Sleeve
- Promat PROMASEAL® Supawrap 40
- Promat PROMASEAL® Pillows
- Promat PROMASEAL® Fyrestrip
- Promat PROMASEAL® IBS Foam Strip™
- Promat PROMASEAL® A acrylic sealant
- Promat PROMASEAL® AG acrylic intumescent sealant
- Fire Stop (Party Wall Batts)

Fasteners and Anchors

Fasteners and anchors used to fix Siniat steel framing products and accessories must be compatible and also have equivalent corrosion protection for the service life of the entire system.

As Siniat steel profiles are roll formed using Zincalume®, Galvaspan® or galvanised corrosion protection coatings, they are particularly compatible with zinc coated fasteners. The zinc layer acts as a sacrificial anode which protects the steel from corrosion.

When using any fastener with Siniat steel profiles, it is essential that there is limited exposure to moisture during service. If the screws or studs come into contact with moisture, ensure that all moisture can dry out quickly beneath fastener heads or around washers (if used).

Please note that stainless steel screws are not recommended with Siniat steel framing, or alternatively seek expert advice on corrosion and compatibility prior to use.

Green timber and certain treated timbers such as Copper Chromium Arsenate (CCA) treated timbers are corrosive to steel fasteners, especially in combination with moisture.

Consult the manufacturer for specific advice on the appropriate fasteners for the application and environmental conditions.

Table 8 Typical Steel Framing Fasteners Table

Typical Applications	Image	Features	Typical Sizes Available Screw gauge - Threads per inch x Length
Steel framing screw 0.75 - 2.50mm BMT. Recommended for Siniat 0.5 - 0.75mm BMT steel framing.	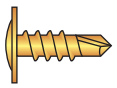	• Fine thread • Button head • Drill point	8 - 18 x 12mm 8 - 18 x 16mm 8 - 18 x 20mm 8 - 18 x 25mm 8 - 18 x 32mm
Steel framing screw 0.75 - 3.50mm BMT. Recommended for Siniat 1.15 - 1.5mm BMT steel framing.		• Fine thread • Wafer head • Drill point	10 - 16 x 16mm 10 - 16 x 22mm 10 - 16 x 30mm 10 - 16 x 40mm
Steel framing screw 0.75 - 3.50mm BMT. Recommended for Siniat 1.15 - 1.5mm BMT steel framing.	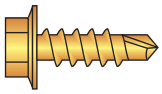	• Fine thread • Hex head • Drill point	10 - 16 x 16mm 10 - 16 x 25mm
Steel framing screw 1.00 - 4.50mm. Recommended for Siniat 1.15 - 1.5mm BMT steel framing.	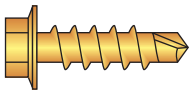	• Fine thread • Hex head • Drill point	12 - 14 x 20mm 12 - 14 x 30mm 12 - 14 x 35mm 12 - 14 x 45mm 12 - 14 x 55mm 12 - 14 x 65mm 12 - 14 x 75mm
Steel framing to timber	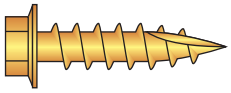	• Coarse thread • Hex head • Type 17 point	10 - 12 x 25mm 12 - 11 x 25mm 12 - 11 x 40mm 12 - 11 x 50mm 12 - 11 x 65mm
Steel framing to timber	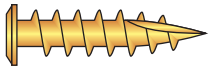	• Coarse thread • Wafer head • Type 17 point	10 - 12 x 25mm 10 - 12 x 35mm 10 - 12 x 45mm

1. Information in the table is supplied by ICCONS Pty Ltd, unless otherwise noted. Other fastener / anchor manufacturers product specifications may vary.
2. Refer to the manufacturer's technical literature for the correct in-situ applications, corrosion class and capacity information of a specific fastener or anchor.
3. Drawings are representative only.

Table 9 Typical Plasterboard and Fibre Cement Fasteners Table

Typical Applications	Image	Features	Typical Sizes Available Screw gauge - Threads per inch x Length
Plasterboard to timber	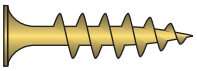	• Coarse thread • Bugle head • Needle point	6 - 9 x 25mm 6 - 9 x 32mm 6 - 9 x 41mm 8 - 9 x 45mm 8 - 9 x 50mm 8 - 9 x 75mm
Plasterboard to timber or steel up to 0.75mm BMT	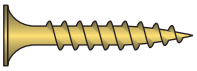	• Fine thread • Bugle head • Needle point	6 - 18 x 20mm 6 - 18 x 25mm or 7 - 15 x 25mm 6 - 18 x 32mm or 7 - 15 x 32mm 6 - 18 x 35mm 6 - 18 x 41mm 6 - 18 x 45mm or 7 - 15 x 45mm 7 - 15 x 50mm 7 - 15 x 57mm 8 - 15 x 65mm 8 - 15 x 75mm 10 - 12 x 100mm
Plasterboard to steel 0.75mm to 2.30mm BMT	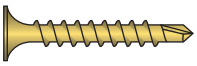	• Fine thread • Bugle head • Drill point	6 - 20 x 25mm 6 - 20 x 32mm 6 - 20 x 41mm 6 - 20 x 45mm 8 - 18 x 75mm (up to 2.50mm BMT)
Plasterboard laminating screw	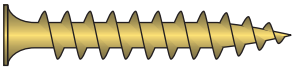	• Coarse thread • Bugle head • Needle point	10 - 8 x 38mm 10 - 8 x 50mm
Fibre cement to steel up to 0.75mm BMT		• Self embed head • Needle point	8 -15 x 20mm 8 -15 x 30mm
Fibre cement to steel 0.75mm to 2.30mm BMT		• Fine thread • Self eambed head • Drill point	8 -15 x 20mm 8 -15 x 30mm
Plasterboard to masonry or concrete	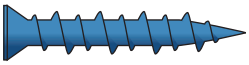	• Tapcon thread • Countersunk head • Needle point	10 x 32mm 10 x 45mm 14 x 55mm 14 x 70mm
Hollow Wall Anchor (Spring Toggle)	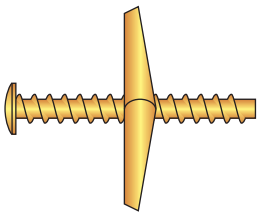	• Fine thread • Pan head	1/8" x 50mm 1/8" x 75mm 3/16" x 50mm 3/16" x 75mm 3/16" x 100mm

1. Information in the table is supplied by ICCONS Pty Ltd, unless otherwise noted. Other fastener / anchor manufacturers product specifications may vary.
2. Refer to the manufacturer's technical literature for the correct in-situ applications, corrosion class and capacity information of a specific fastener or anchor.
3. Drawings are representative only.

Table 10 Fastener Corrosion Resistance Class

Minimum Fastener Corrosion Resistance Class	Atmosphere of Intended Use	Examples
1	General use in internal applications	• Offices
2	General use in other than external applications but where significant levels of condensation occur	• Warehouses or sport halls • Outdoor areas >50km from the coast* • When covered with coating system
3	External use in mild, moderate industrial or marine environments	• Dairies or food processing plants • Coastal areas with low salinity
4	External use in severe marine environment	• Indoor swimming pools • Outdoor areas <50m from bay shorelines or >300m to 1000m from surf*
5	Beachfront	• Outdoor areas <300m from surf

1. *Distances are approximate. Refer to AS4312 for more detail.
2. This is a general guide to minimum requirements only. Obtain specialist advice if in doubt.

Screw Anchors

Table 11 Screw Anchor Table

Typical Applications	Image	Features	Sizes Available Diameter x length
Siniat Screw Anchor for steel track or clips, into concrete or masonry	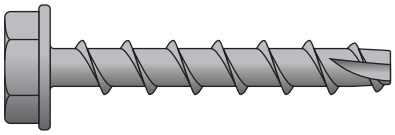	• Seismic C1 certified • Suitable for overhead applications • Hex head • Close to edge proximity compared to other anchors	6 x 45mm (SA6x45) 6 x 60mm (SA6x60)
Siniat Screw Anchor for Universal Bracket (UB80) and Dropper Bracket (DB), into concrete or masonry	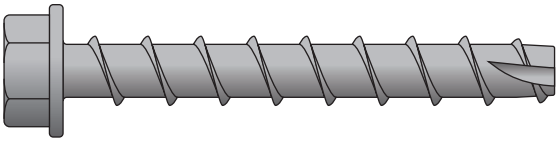	• Seismic C1 certified • Suitable for overhead applications • Hex head • Close to edge proximity compared to other anchors	8 x 65mm (SA8x65)

Table 12 Properties

Anchor	SA6x45 and SA6x60	SA8x65
Head type	Hex-head SW13	Hex-head SW13
Corrosion protection	8 µm zinc coating	8 µm zinc coating
Nominal tensile strength f_{uk} (N/mm²)	930	810
Yield strength f_{yk} (N/mm²)	745	695
Stressed cross-section A_s (mm²)	26.9	48.4

Table 13 Concrete Thickness and Anchor Placement

Anchor	SA6x45	SA6x60	SA8x65
Minimum concrete thickness (mm)	80	100	100
Minimum spacing S_{min} (mm)	35	35	50
Minimum edge distance C_{min} (mm)	35	35	40

Table 14 Static and Quasi-static Performance in Concrete

Design Resistance in Cracked Concrete (kN)		Static / Quasi-static Loads					
		Pull-out			Shear		
		SA6x45	SA6x60	SA8x65	SA6x45	SA6x60	SA8x65
Nominal embedment depth h_{nom} (mm)		40	55	60	40	55	60
Concrete Grade (MPa)	20	1.39	3.33	6.00	3.77	8.33	12.67
	25	1.54	3.70	6.66	4.22	8.33	12.67
	32	1.76	4.22	7.59	4.77	8.33	12.67
	40	1.96	4.70	8.46	5.33	8.33	12.67
	50	2.19	5.27	9.48	5.96	8.33	12.67

1. No edge distance and spacing influence, or reinforcement affects.
2. Interaction of both Pull-out and Shear to be considered as per AS5216-2018 Equation 8.2.1 (1) and 8.2.1 (2).

Table 15 Seismic C1 Performance in Concrete

Design Resistance in Cracked Concrete (kN)		Seismic C1 Loads					
		Pull-out			Shear		
		SA6x45	SA6x60	SA8x65	SA6x45	SA6x60	SA8x65
Nominal embedment depth h_{nom} (mm)		40	55	60	40	55	60
Concrete Grade (MPa)	20	1.39	2.22	6.00	1.60	1.67	3.97
	≥ 25	1.39	2.22	6.00	1.67	1.67	3.97

1. No edge distance and spacing influence, or reinforcement affects.
2. Interaction of both Pull-out and Shear to be considered as per AS5216-2018 Equation 8.2.1 (1) and 8.2.1 (2).
3. $\alpha_{gap} = 0.5$

Screw Anchor Installation
SA6x45 and SA6x60

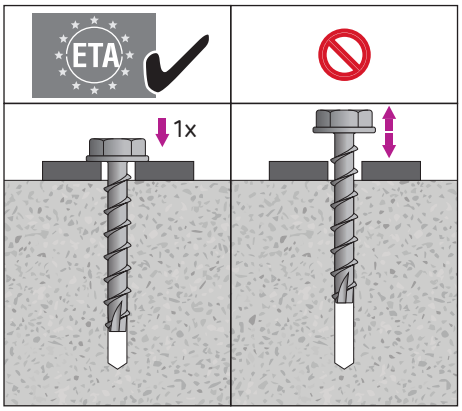

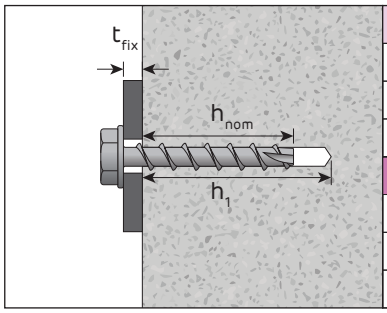

SA6x45	
h_1	50mm
h_{nom}	40mm
t_{fix}	5mm maximum
SA6x60	
h_1	65mm
h_{nom}	55mm
t_{fix}	5mm maximum

General Applications
Section

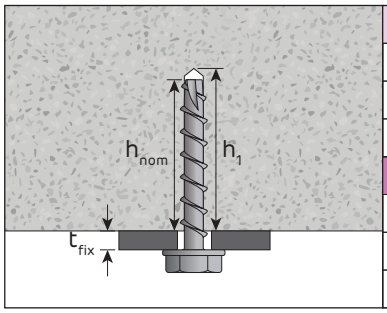

SA6x45	
h_1	48mm
h_{nom}	40mm
t_{fix}	5mm maximum
SA6x60	
h_1	63mm
h_{nom}	55mm
t_{fix}	5mm maximum

Overhead Applications
Section

1

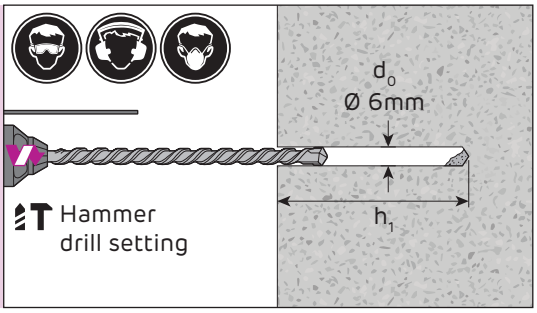

2

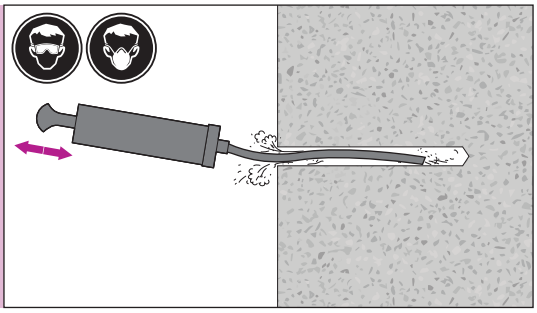

3

h_{nom}	Hilti Impact Driver / Wrench			Installation torque
	SID 2-A ½"	SIW 6AT-A22 ½"	SIW 22T-A ½"	
40mm	✔	✔ 2	⊘	20 Nm
55mm	✔	✔ 3	⊘	25 Nm

4

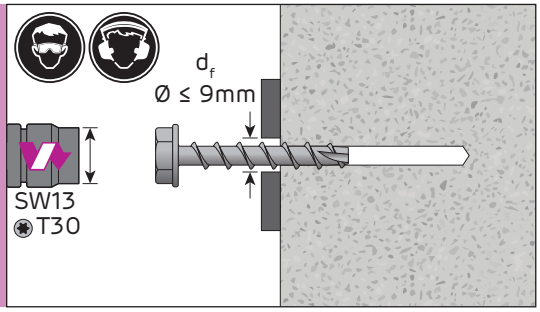

5

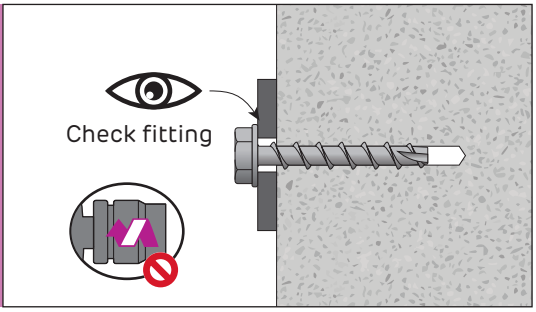

Siniat Screw Anchor Installation
SA8x65

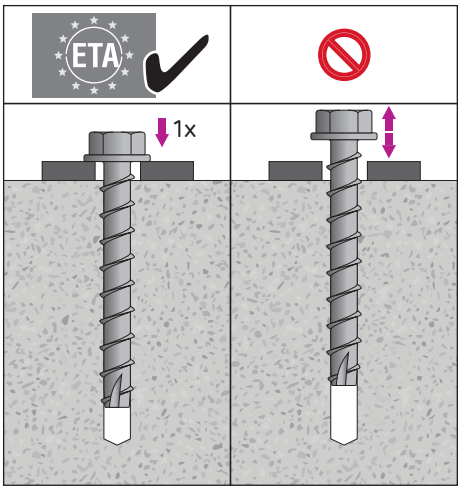

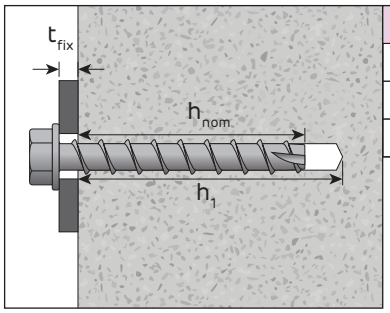

SA8x65	
h_1	70mm
h_{nom}	60mm
t_{fix}	5mm maximum

General Applications
Section

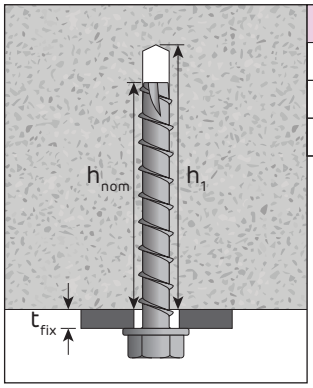

SA8x65	
h_1	70mm
h_{nom}	60mm
t_{fix}	5mm maximum

Overhead Applications
Section

1

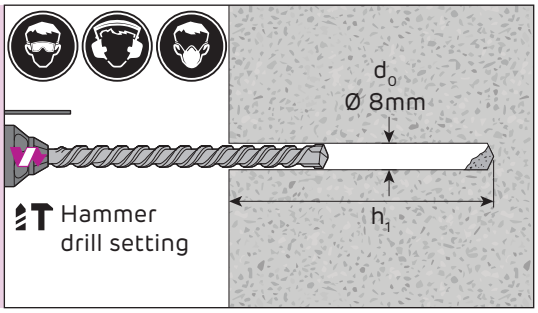

2

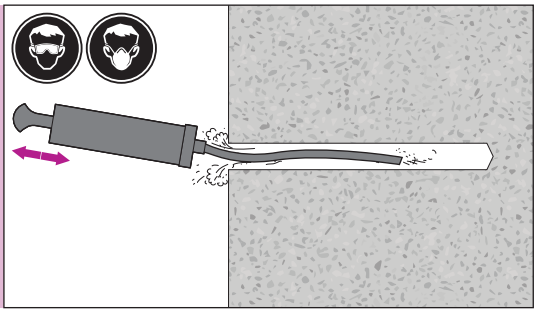

3

h_{nom}	Hilti Impact Driver / Wrench				
	SIW 22-A ½"	SIW 6AT-A22 ½"	SIW 22T-A ½"	SIW 22T-A ¾"	SIW 9-A22 ¾"
60mm	✔	✔	✔	✔	⊘

4

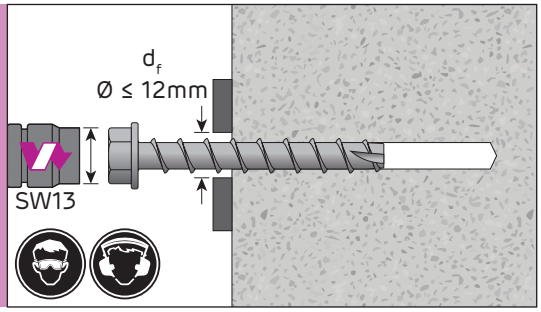

5

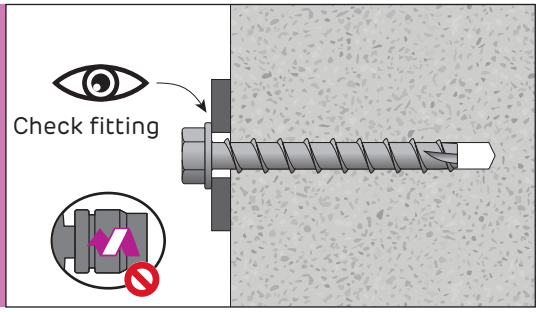

2.2 Care and Use

Storage, Delivery and Handling

Wall and ceiling linings must be kept dry and should be stacked clear of the floor using supports not more than 600mm apart as shown in Figure 1. If outdoor storage is unavoidable, linings and accessories should be fully protected from the weather. Plasterboard that has been exposed to direct sunlight, or has been fixed and left unpainted for long periods, may become discoloured. If this happens, it must be sealed with a solvent borne stain sealer undercoat as recommended by the paint manufacturer.

Plasterboard ceilings should not be left unpainted as they may absorb moisture from the atmosphere and sag. Plasterboard finishing compound must not be left unpainted as it becomes susceptible to moisture absorption and can develop shrinkage defects or become powdery and flake off if painting is attempted.

To reduce the possibility of damage to plasterboard, arrange delivery to site immediately before installation. During delivery, care should be taken not to damage the surface or edges the plasterboard sheets.

Exposure to excessive humidity during storage can result in plasterboard becoming damp and soft, and may appear defective. In this case allow the plasterboard to dry out and handle with care during installation.

To help protect plasterboard from absorbing humidity:

- Avoid open sources of water such as wet floors
- Wrap the plasterboard with plastic overnight when storing outside
- Provide ventilation
- Install soon after delivery
- Install during dry weather for best results.

Store Siniat steel products where they are not in constant contact with water or in wet environments for extended periods. Avoid exposure to airborne contaminants such as sea spray.

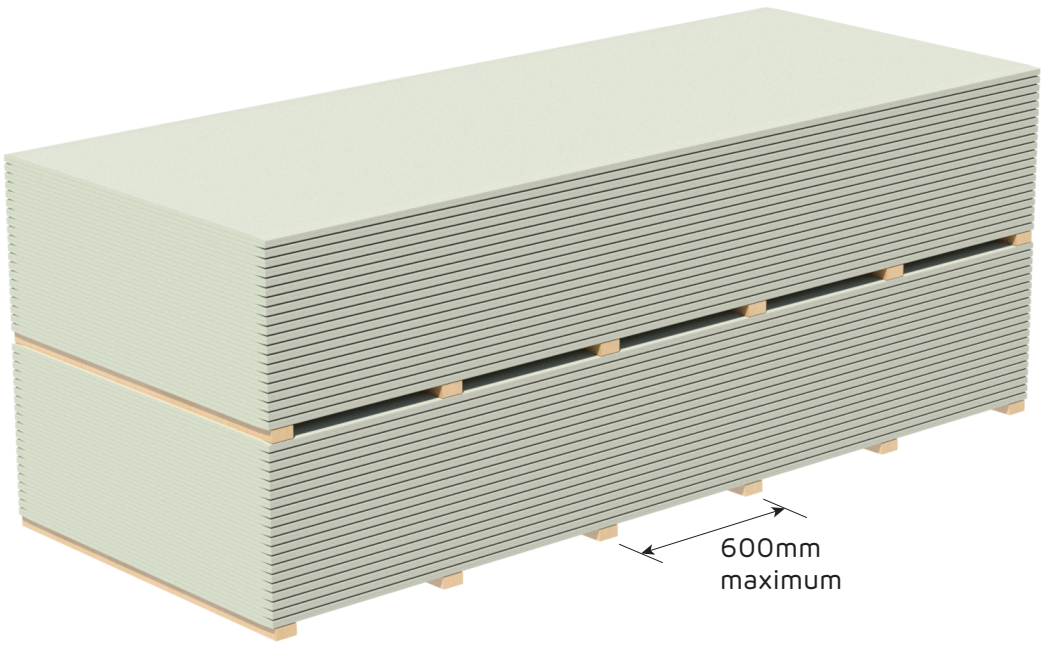

FIGURE 1 Correct Plasterboard Storage

Weather Protection

Siniat plasterboard must only be installed in a building that is weathertight. Particular care must be taken in areas of high humidity and coastal areas subject to salt spray. Complete all exterior doors, walls, windows and the roof before installing plasterboard. Prevent rain from entering buildings, avoid water on floors or other sources of open water and allow wet concrete or masonry to dry. These precautions will reduce excessive humidity that may be absorbed by timber or unpainted plasterboard and minimise defects caused by timber shrinkage or moist plasterboard.

Siniat plasterboard installed on the exterior side of external wall framing must be protected from the weather until moisture barriers and external cladding are installed. Protect plasterboard from water pooling at ground level.

Condensation and Ventilation

Condensation of water on a surface occurs when the temperature of a building element falls below the dew point temperature. Moisture from the air then condenses on the surface.

Condensation onto either the face or back of plasterboard and associated substrate framing must be avoided. Insufficient protection from condensation can result in plasterboard joint distortion, sagging, mould growth, fastener popping and corrosion on steel framing.

Many inter-related factors must be taken into account to control condensation. Good practice is to make use of wall and ceiling insulation, vapour barriers, and especially ventilation.

Siniat plasterboard and steel framing must only be installed in a well ventilated area. Ventilation is crucial to the longevity of all building materials as it controls the indoor air quality. Therefore appropriate ventilation must be considered for the spaces in walls, under floors and in particular under roofs and soffits.

Continuous ventilation in a wall or ceiling cavity near salt water may reduce the service life of any steel substrate framing. As such, vented wall and ceiling systems with only one opening are recommended. Fully ventilated building systems with multiple openings near salt water must be considered with caution.

To minimise the effects of condensation:

- Use **water**shield, **multi**shield, **tru**rock or **tru**rock hd to increase protection against moisture.
- Use moisture barriers, sarking, and insulation. However, it is important that the right type is selected for the construction type and that it is installed correctly. [Refer to the manufacturer's specifications]
- Use foil backed insulation under metal roofs which are susceptible to forming condensation.
- Install eave vents, gable vents and roof ventilators in the roof cavity.
- Remove humidity from bathrooms via an exhaust fan to the outside.
- Use a quality paint system to provide protection against paint peeling and condensation soaking into plasterboard and compounds.
- Ensure the building design controls condensation on the steel components so they are not constantly wet.

In hot and humid climates where the building is air-conditioned below the dew point of the outside air, the wall and ceiling framing members and internal linings should be fully protected by moisture barriers to separate them from the humid external air. The moisture barriers should be thermally insulated to maintain them at a temperature above the dew point.

Exposure to High Humidity

Plasterboard exposed to high humidity (above 90%) for an extended period, may affect the plasterboards integrity and therefore its ability to perform its intended function.

For rooms with intermittent periods of high humidity such as bathrooms or basements where plasterboard is installed, a source of ventilation is required to enable removal of excess moisture, such as an open window or exhaust fan.

Ceilings in rooms such as indoor swimming pools and communal showers are subject to long periods of high humidity (above 90%). The use of plasterboard on these ceilings is not guaranteed by Etex Australia. PermaRock Cement Board Indoor is recommended for these areas.

watershield, **multi**shield, **tru**rock or **tru**rock hd completely covered with a waterproof membrane complying with *AS/NZS 4858:2004 Wet Area Membranes* may be used for walls in rooms subject to long periods of high relative humidity. Vertical junctions and wall to floor junctions must also be waterproof, refer to Section 3.4 Internal Wet Areas using Plasterboard.

In areas where high humidity is likely (ie: under concrete slabs with concrete block walls) consider closer framing intervals for ceiling linings to limit sag

Exposure to Water

Plasterboard that has become wet during its service life must be assessed for damage and then either repaired or replaced. Plasterboard exposed to water can be assessed by anyone familiar with plasterboard such as plasterer.

The Onboard referred to below may be used as a guide for determining if the plasterboard needs repair or replacement.

OnBoard 'Assessing Wet Plasterboard'

Read Siniat OnBoard Technical Newsletter on Assessing Wet Plasterboard by clicking on the link or by using your phone's camera on the QR code.

Exposure to Excessive Heat

Plasterboard is an ideal building material for normal ambient temperatures. It is not suitable for long periods at elevated temperatures such as installed near fireplace flues or chimneys. Fire resistant plasterboard is no exception. It is designed to slow down a fire, not to resist constant elevated temperatures.

The effect of high temperatures on plasterboard is to chemically dehydrate the core. This process generally begins at around 80°C but can occur at lower temperatures under certain conditions.

AS/NZS 2589:2017, Gypsum linings – Application and finishing, states that plasterboard must not be exposed to temperatures above 52°C for prolonged periods.

Heat generating appliances have installation instructions for the correct distances between plasterboard linings and heat sources. The *National Construction Code (NCC)* also has requirements for installation of heating appliances.

Glass or Stainless Steel Splashback

AS/NZS 5601.1-2013 General Gas Installations allows plasterboard to be used behind splashbacks near domestic gas burners as follows:

- Behind ceramic tiles any plasterboard may be used if the ceramic tiles are minimum 5mm thick
- If clearance to glass or stainless steel splashback is 200mm* or more, then any plasterboard may be used
- If clearance to glass splashback is less than 200mm* then 10mm plasterboard may be used if the glass is marked as 'toughened safety glass'
- Clearance to stainless steel splashback is less than 200mm* then 6mm fibre cement over 10mm plasterboard may be used if the steel is at least 0.4mm thick.

*Clearance is measured from the edge of the nearest burner to the splashback.

2.3 Building Requirements and Solutions

Siniat offers wall and ceilings systems using plasterboard to satisfy a variety of building requirements, including:

- Standard wall partition and ceiling types
- Fire protection
- Sound insulation
- Sound absorption
- Impact resistance
- Thermal insulation
- Wet areas and mould resistance
- X-ray shielding
- Improved indoor air quality solutions
- Aesthetic solutions

All systems in Blueprint have been designed to satisfy the requirements of the *National Construction Code (NCC)*.

System performance relies not only on selecting the correct nominated material components such as plasterboard, compounds, studs and insulation, but also on following the correct installation details such as stud spacing and fixing centres. Even small details like sealing gaps can have an effect on system performance.

Variations in construction or materials may reduce a system's fire and sound insulation rating, structural capacity or other aspects of performance. Where performance is compromised it can result in non-compliance. Non-compliance is costly to rectify and if not done the ultimate cost can be human life.

Control Joints

Control joints allow for building movement resulting from influences such as moisture migration, structural movement and foundation settlement. Cracks in plasterboard and plasterboard joints should be minimised by using control joints and the correct installation techniques.

According to *AS/NZS 2589:2017, Gypsum linings –Application and finishing*, control joints must be installed in plasterboard walls and ceilings at:

- Maximum 12 metre intervals
- Control joints in the structure
- Any change in the substrate material

Control joints are also recommended at the:

- Junction of a larger room and passageway
- Floor line in stairwells. Cover the gap with a moulding fastened to one edge.

Distance between control joints may need to be reduced to less than 12 metres due to conditions such as large temperature or humidity variations. Control joints used in plasterboard external ceilings must have 6 metre maximum intervals, and for tiled plasterboard walls must have 4.8 metre maximum intervals.

Ceilings in close proximity to roof tiles or metal sheeting may require control joints at much smaller intervals as they are exposed to larger rates of thermal expansion and higher humidity.

An internal or external corner, bulkhead or full height door or window may perform the function of a control joint.

Design Standards

Wall and ceiling system framing must be designed according to the relevant design standard:

- *AS 1684 Residential Timber Framed Construction*
- *AS 1720 Timber Structures*
- *AS/NZS 2785 Suspended Ceilings*
- *AS/NZS 4600 Cold Formed Steel Structures*
- *NASH Standard for Residential and Low-rise Steel Framing, Part 1 and Part 2*
- *AS/NZS 3700 Masonry Structures*

Siniat Frame Finder and Estimator

Use the Siniat Frame Finder and Estimator by clicking on the link or by using your phone's camera on the QR code.

Structural Frame Design for Lightweight Systems

Load Determination

To design the frame for a wall or ceiling system, first the loads acting on the system must be determined. The Australian and New Zealand 1170 series of standards must be referenced to define the loads that a structure is subjected to.

- *AS/NZS 1170.0 Structural Design Actions – General Principles*
- *AS/NZS 1170.1 Structural Design Actions – Permanent, imposed and other actions*
- *AS/NZS 1170.2 Structural Design Actions – Wind actions*
- *AS/NZS 1170.3 Structural Design Actions – Snow and ice actions*
- *AS 1170.4 Structural Design Actions – Earthquake actions in Australia*

An abridged version of the wind actions standard, specific to wind loads for certain Australian low-rise residential dwellings may also be used, and it is called AS 4055 Wind loads for housing.

There is also a joint Australian and New Zealand standard specific to suspended ceilings, *AS/NZS 2785 Suspended ceilings – design and installation*, which covers additional loads and load cases.

Common Loads on Wall and Ceiling Systems

The most common loads which may act on a wall or ceiling system include:

1. Dead loads (G): Weight of the wall or ceiling itself.
2. Live loads (Q): Shelf loads, Hand-rail loads, Impact loads, and any other variable loads.
3. Wind loads (W): External wind loads, and internal wind loads.
4. Services loads (U): A nominal service load specific to ceiling systems.
5. Earthquake loads (E): Forces acting on wall and ceiling systems due to an earthquake event.

Other load types do exist for particular situations, and the AS/NZS 1170 series should be referred to.

Wind Loads

External and internal wind loads for a building or dwelling on a specific site are determined using the relevant standards, either AS/NZS 1170.2 for larger buildings or AS 4055 for low-rise residential dwellings. Reference to these standards should be made as both contain limitations to the type and size of structures covered.

The calculation of wind pressures using the method prescribed in AS/NZS 1170.2 when used for a specific project is summarised below. As this is a guide only, it is recommended to refer to the standard or seek professional engineering advice when determining wind pressures for a specific building/dwelling.

To determine the wind pressures for a particular structure, the following items need to be determined:

1. Building Importance Level from the National Construction Code (NCC), Volume One, Section B1.2. This section of the NCC sets out the appropriate annual probability of exceedance limits for wind, snow and earthquake loads for the relevant importance level of the building. The building importance levels range from 1 (least important) to 4 (most important).

2. Determine the site wind speed,

$V_{sit,\beta} = V_R\, M_d\, M_{z,cat}\, M_s\, M_t$

where:

$V_{sit,\beta}$ is the site wind speed (metres per second) based upon the 8 cardinal directions.

V_R is the regional gust wind speed (metres per second) based upon the wind region [Refer to Figure 2] and the annual probability of exceedance.

M_d is the wind directional multipliers for the 8 cardinal directions. For simplicity the wind direction multiplier is usually taken is 1.

$M_{z,cat}$ is the terrain/height multiplier, and is a function of the Terrain Category surrounding the location, and the height of the building or particular building element above the ground. The terrain/height multiplier ranges from 0.75 to 1.32.

M_s is the shielding multiplier, and is usually taken as 1.

M_t is the topography multiplier, and should be checked as it also depends on the terrain surrounding the location. The topography multiplier is usually taken as 1 but it may also go higher than 1.

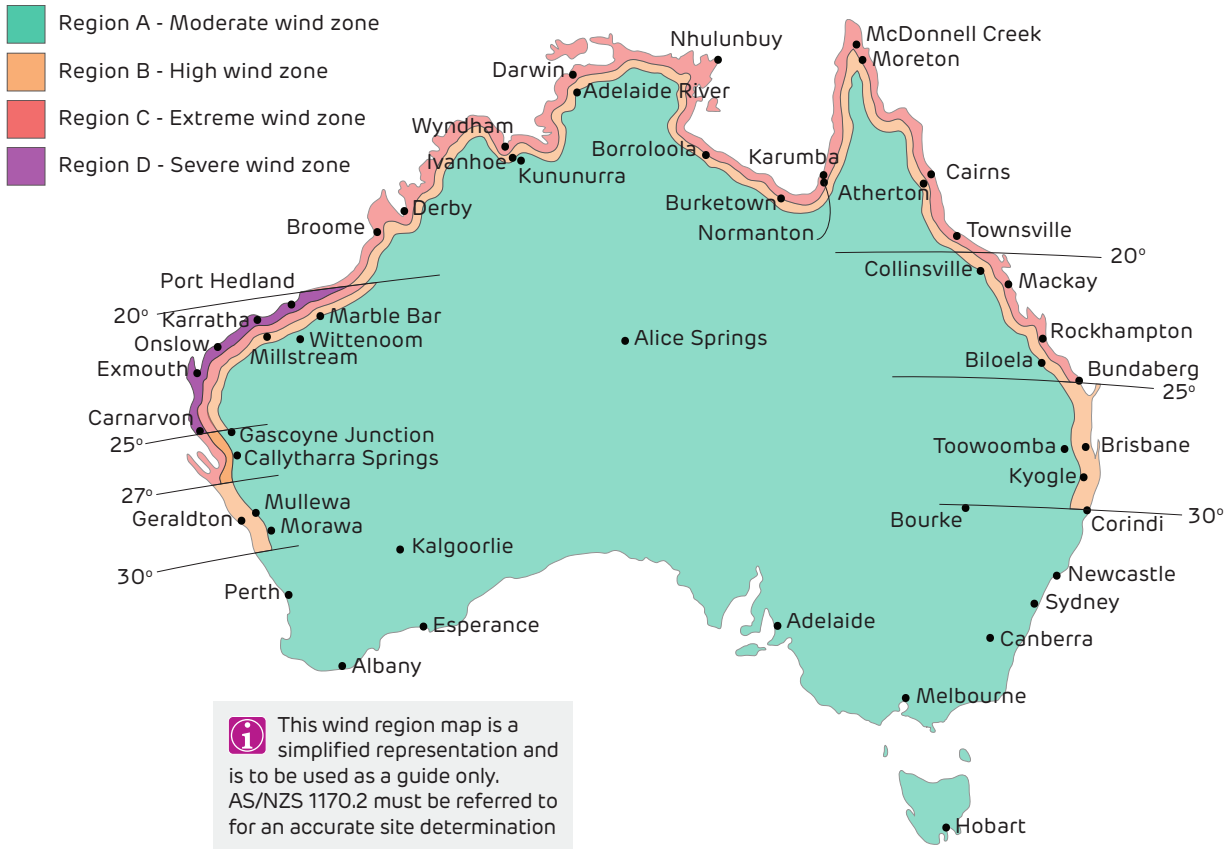

FIGURE 2 Australian Wind Regions

3. Determine the specific design pressure for the location of a building element.

$p = (0.5\ \rho_{air})\ [V_{des,\Theta}]^2\ C_{fig}\ C_{dyn}$

where:

p is the wind pressure, in pascals (Pa). As this is usually a large number it is simplified to kilo-pascals (kPa).

ρ_{air} is the density of air, taken as 1.2 kg/m^3

$V_{des,\Theta}$ is the maximum value of $V_{sit,\beta}$ in the range of ± 45° from the buildings 4 orthogonal directions.

C_{fig} is an aerodynamic shape factor for the building element in question. C_{fig} can be relevant for external ($C_{fig,e}$), internal ($C_{fig,i}$), and a combination of external and internal wind pressures ($C_{fig,net}$). For a detailed explanation of the aerodynamic shape factor, see the relevant wind sections below.

C_{dyn} is a dynamic response factor and is related to the effects of fluctuating forces and resonant response of wind sensitive buildings. It analyses the along wind and cross wind response of a building during wind events. Generally taken as 1, but it may go higher than 1. Specialist wind engineering expertise may be required for certain buildings.

External Wind Pressures for Enclosed Rectangular Buildings

External wind pressures apply to cladding elements and structural elements directly supporting cladding like top hat framing. For a specific building element the external aerodynamic shape factor can be calculated by:

$C_{fig,e} = C_{p,e}\ K_a\ K_L\ K_p$

where:

$C_{fig,e}$ is the aerodynamic shape factor for external wind pressures.

$C_{p,e}$ is the external pressure coefficients for the outer surface of a building. There are different external pressure coefficients for windward walls, leeward walls, side walls and roofs.

K_a is an area reduction factor based upon the tributary area (m2) that a building element structurally supports. Generally taken as 1 for light-weight systems as the tributary area is rather small compared to larger structural members supporting the main structure.

K_L is a local pressure factor for wind pressures applied to cladding and members that support the cladding including all relevant fasteners. This factor

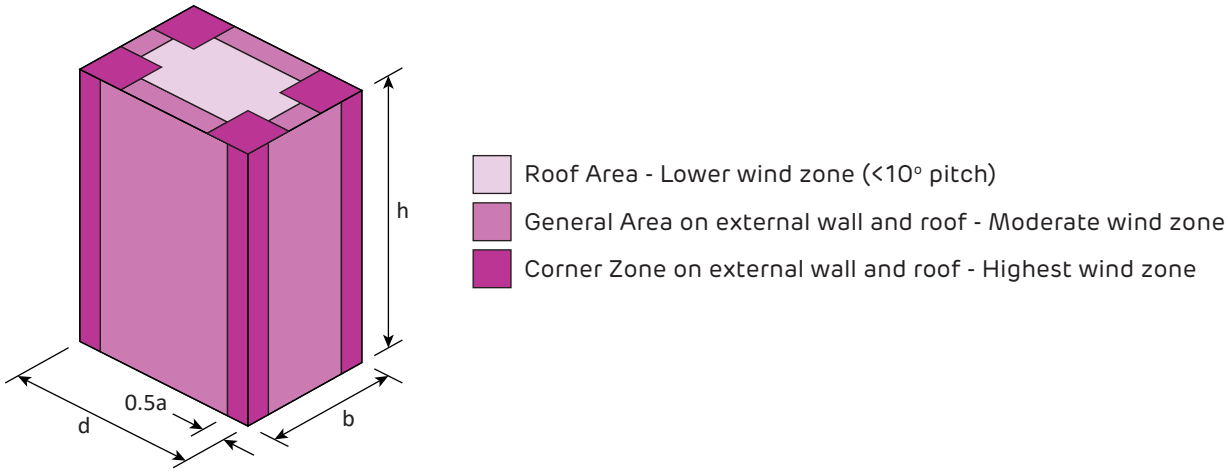

FIGURE 3 Typical Simplified Wind Zones on a Building
Combination external plus internal wind pressures (for stud framing)
Simplified to 2 zones

is dependent on the geometric properties of the building including height (h), breadth (b) and depth (d) [Refer to Figure 3], where depending on the location of the building the local pressure factor may be in the range of 1 up to 3. (a) is the minimum of 0.2b, 0.2d or h.

Internal Wind Pressures For Enclosed Rectangular Buildings

Internal wind pressures apply to internal wall and ceiling systems, and they are a function of the external wind pressures (site wind speed) and the size of any potential openings in the external surfaces. Potential openings include doors, windows and vents, which may be left open or may fail during a wind high event.

In regions C and D [Refer to Figure 2] the internal wind pressure must also contend with the potential effects of airborne debris during high wind events. An assessment should be made for each case; therefore professional advice will be required.

For a specific building element inside a building, the internal aerodynamic shape factor can be calculated by:

$C_{fig,i} = C_{p,i}$

where:

$C_{fig,i}$ is the aerodynamic shape factor for internal wind pressures.

$C_{p,i}$ is the internal pressure coefficient for the spaces inside a building. When there are no potential openings in any external surface greater than 0.5% of the total surface area, then the internal pressure coefficients are generally taken as the values shown in Figure 4.

For cases where the potential openings in any external surface can be greater than 0.5%, then the internal wind pressures gradually increase right up to the external pressures if the opening is large enough. Advice should be sought from Siniat or a professional engineer should this case occur for your project.

Implementing a sufficient building management plan for high wind events when a building is operational, is a possible way to reduce the potential size of external openings, and thus keeping the internal wind pressures to more economical levels.

For some applications it is also common in the drywall industry to use nominal internal wind pressures of
W_{ult} = 0.375 kPa, and W_{ser} = 0.25 kPa with either a maximum deflection of height/240 for flexible linings (i.e.: plasterboard) or height/360 for brittle linings (i.e.: fibre cement, masonry) for walls, and span/200 for suspended ceilings or span/360 for horizontal stud or top hat ceilings. If a project determines that this design criteria is acceptable, then the nominated wall height and ceiling span tables may be used to select the appropriate frame.

Note that these nominal pressures should not be confused with NCC Volume One, Specification C1.8 which is a robustness criteria for lightweight fire rated walls, such as fire rated plasterboard walls, and should not be confused with site specific internal wind pressures.

Siniat Internal Wind Load Calculator

Use the Siniat Internal Wind Load Calculator by clicking on the link or by using your phone's camera on the QR code.

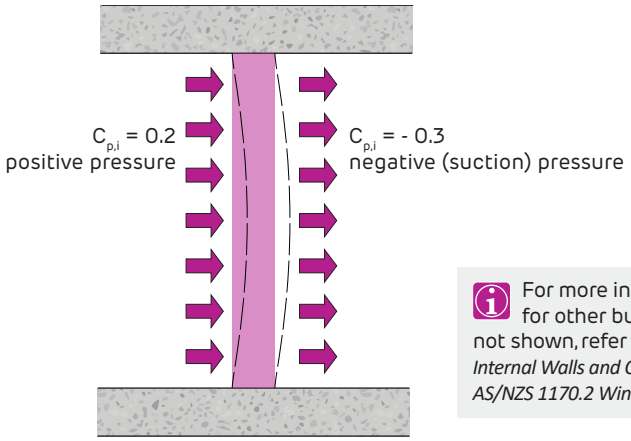

Case 1: Internal Wall $C_{p,i\ net}$ = 0.5

1. Apartment buildings and the like with 2 or 3 walls permeable, and other walls impermeable
2. Single leaf internal wall
3. Effectively sealed wall
4. Adjacent to an external wall.

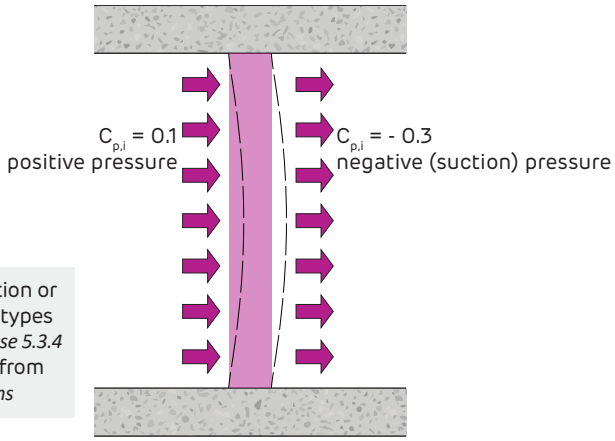

Case 2: Internal Wall $C_{p,i\ net}$ = 0.4

1. Apartment buildings and the like with 2 or 3 walls permeable, and other walls impermeable
2. Single leaf internal wall
3. Effectively sealed wall
4. Other internal walls that provide an effective seal between spaces.

For more information or for other building types not shown, refer to *Clause 5.3.4 Internal Walls and Ceilings* from *AS/NZS 1170.2 Wind Actions*

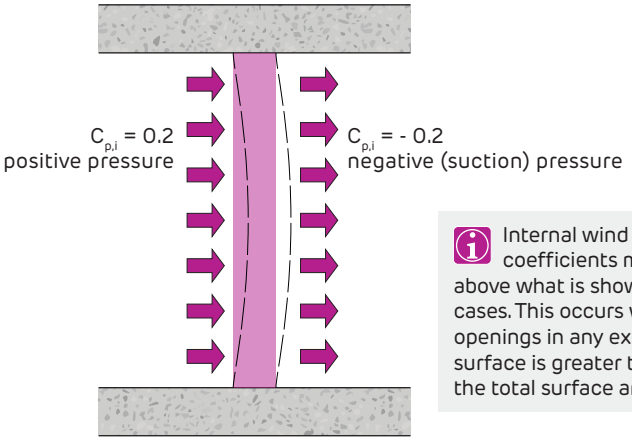

Case 3: Internal Wall $C_{p,i\ net}$ = 0.4

1. Air-conditioned Hospitals, Offices and Shopping Centres (except loading docks) that are effectively sealed where the external walls have non-opening windows
2. Single leaf internal wall
3. Effectively sealed wall
4. Adjacent to an external wall, or other internal walls that provide an effective seal between spaces.

Internal wind pressure coefficients may go above what is shown in these cases. This occurs when openings in any external surface is greater than 0.5% of the total surface area.

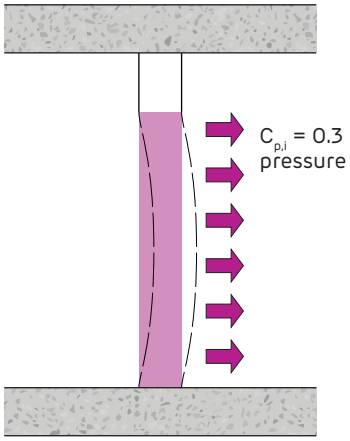

Case 4: Internal Wall $C_{p,i\ net}$ = 0.3

1. Single leaf internal wall
2. Wall with no permanent effective seal

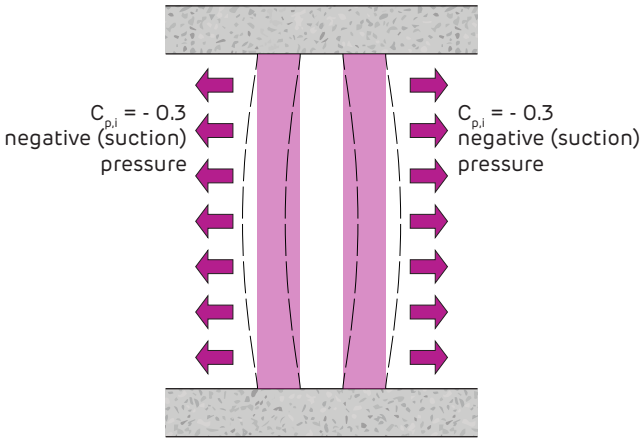

Case 5: Internal Wall $C_{p,i\ net}$ = 0.3

1. Apartment buildings and the like with 2 or 3 walls permeable, and other walls impermeable
2. Double leaf internal wall
3. Effectively sealed wall
4. Adjacent to an external wall.

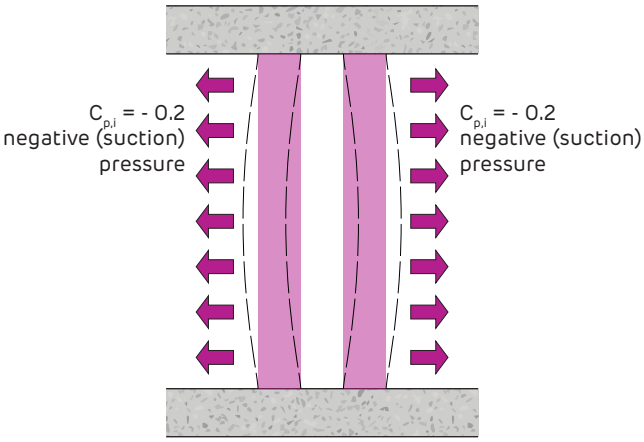

Case 6: Internal Wall $C_{p,i\ net}$ = 0.2

1. Air-conditioned Hospitals, Offices and Shopping Centres (except loading docks) that are effectively sealed where the external walls have non-opening windows
2. Double leaf internal wall
3. Effectively sealed wall
4. Adjacent to an external wall.

FIGURE 4 Typical Simplified Wind Pressure Coefficients for Internal Wall Frame Design
Region A and B only - No potential openings in any external surface greater than 0.5% of the total surface area
Section view

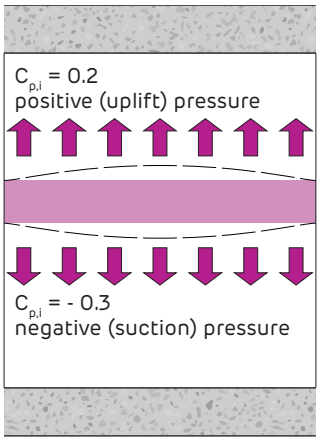

For more information or for other building types not shown, refer to *Clause 5.3.4 Internal Walls and Ceilings* from *AS/NZS 1170.2 Wind Actions*

Internal wind pressure coefficients may go above what is shown in these cases. This occurs when openings in any external surface is greater than 0.5% of the total surface area.

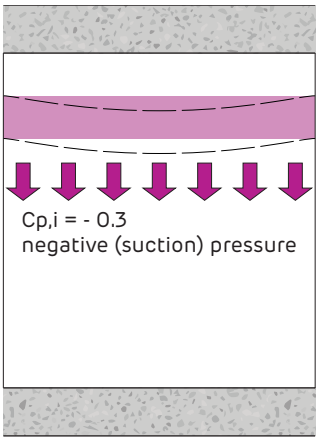

Case 1: Internal Ceiling $C_{p,i}$ = - 0.3 (suction) and $C_{p,i}$ = 0.2 (uplift)

1. Apartment buildings and the like with 2 or 3 walls permeable, and other walls impermeable
2. Internal ceiling adjacent to an external walls
3. Effectively sealed ceiling with an impermeable roof.

Case 2: Internal Ceiling $C_{p,i}$ = - 0.3 (suction)

1. Air-conditioned Hospitals, Offices and Shopping Centres (except loading docks) that are effectively sealed where the external walls have non-opening windows
2. Internal ceiling
3. Effectively sealed ceiling with an impermeable roof.

FIGURE 5 Typical Simplified Wind Pressure Coefficients for Internal Ceiling Frame Design
Region A and B only - No potential openings in any external surface greater than 0.5% of the total surface area
Section view

Table 16 Internal Wind Pressures $C_{p,i}$ =0.3

$C_{p,i}$ = Internal wind pressure coefficient

Building Importance Level 2																													
Region	A															B													
Ultimate Wind Speed V500 (m/s)	45															57													
Serviceability Wind Speed V25 (m/s)	37															39													
Terrain Category	1			1.5			2			2.5			3			1			1.5			2			2.5			3		
Height above ground (z)	10	25	50	10	25	50	10	25	50	10	25	50	10	25	50	10	25	50	10	25	50	10	25	50	10	25	50	10	25	50
$M_{z,cat}$	1.12	1.21	1.25	1.06	1.15	1.22	1.00	1.10	1.18	0.92	1.04	1.13	0.83	0.97	1.07	1.12	1.21	1.25	1.06	1.15	1.22	1.00	1.10	1.18	0.92	1.04	1.13	0.83	0.97	1.07
Ultimate Wind Pressure (kPa)	0.46	0.53	0.57	0.41	0.48	0.54	0.36	0.44	0.51	0.31	0.39	0.47	0.25	0.34	0.42	0.73	0.86	0.91	0.66	0.77	0.87	0.58	0.71	0.81	0.49	0.63	0.75	0.40	0.55	0.67
Serviceability Wind Pressure (kPa)	0.31	0.36	0.39	0.28	0.33	0.37	0.25	0.30	0.34	0.21	0.27	0.31	0.17	0.23	0.28	0.34	0.40	0.43	0.31	0.36	0.41	0.27	0.33	0.38	0.23	0.30	0.35	0.19	0.26	0.31
Building Importance Level 3																													
Region	A															B													
Ultimate Wind Speed V1000 (m/s)	46															60													
Serviceability Wind Speed V25 (m/s)	37															39													
Terrain Category	1			1.5			2			2.5			3			1			1.5			2			2.5			3		
Height above ground (z)	10	25	50	10	25	50	10	25	50	10	25	50	10	25	50	10	25	50	10	25	50	10	25	50	10	25	50	10	25	50
$M_{z,cat}$	1.12	1.21	1.25	1.06	1.15	1.22	1.00	1.10	1.18	0.92	1.04	1.13	0.83	0.97	1.07	1.12	1.21	1.25	1.06	1.15	1.22	1.00	1.10	1.18	0.92	1.04	1.13	0.83	0.97	1.07
Ultimate Wind Pressure (kPa)	0.48	0.56	0.60	0.43	0.50	0.57	0.38	0.46	0.53	0.32	0.41	0.49	0.26	0.36	0.44	0.81	0.95	1.01	0.73	0.86	0.96	0.65	0.78	0.90	0.54	0.70	0.83	0.45	0.61	0.74
Serviceability Wind Pressure (kPa)	0.31	0.36	0.39	0.28	0.33	0.37	0.25	0.30	0.34	0.21	0.27	0.31	0.17	0.23	0.28	0.34	0.40	0.43	0.31	0.36	0.41	0.27	0.33	0.38	0.23	0.30	0.35	0.19	0.26	0.31
Building Importance Level 4																													
Region	A															B													
Ultimate Wind Speed V2000 (m/s)	48															63													
Serviceability Wind Speed V25 (m/s)	37															39													
Terrain Category	1			1.5			2			2.5			3			1			1.5			2			2.5			3		
Height above ground (z)	10	25	50	10	25	50	10	25	50	10	25	50	10	25	50	10	25	50	10	25	50	10	25	50	10	25	50	10	25	50
$M_{z,cat}$	1.12	1.21	1.25	1.06	1.15	1.22	1.00	1.10	1.18	0.92	1.04	1.13	0.83	0.97	1.07	1.12	1.21	1.25	1.06	1.15	1.22	1.00	1.10	1.18	0.92	1.04	1.13	0.83	0.97	1.07
Ultimate Wind Pressure (kPa)	0.52	0.61	0.65	0.47	0.55	0.62	0.41	0.50	0.58	0.35	0.45	0.53	0.29	0.39	0.47	0.90	1.05	1.12	0.80	0.94	1.06	0.71	0.86	0.99	0.60	0.77	0.91	0.49	0.67	0.82
Serviceability Wind Pressure (kPa)	0.31	0.36	0.39	0.28	0.33	0.37	0.25	0.30	0.34	0.21	0.27	0.31	0.17	0.23	0.28	0.34	0.40	0.43	0.31	0.36	0.41	0.27	0.33	0.38	0.23	0.30	0.35	0.19	0.26	0.31

Table 17 Internal Wind Pressures $C_{p,i}$ =0.4

$C_{p,i}$ = Internal wind pressure coefficient

Building Importance Level 2																													
Region	A															B													
Ultimate Wind Speed V500 (m/s)	45															57													
Serviceability Wind Speed V25 (m/s)	37															39													
Terrain Category	1			1.5			2			2.5			3			1			1.5			2			2.5			3		
Height above ground (z)	10	25	50	10	25	50	10	25	50	10	25	50	10	25	50	10	25	50	10	25	50	10	25	50	10	25	50	10	25	50
$M_{z,cat}$	1.12	1.21	1.25	1.06	1.15	1.22	1.00	1.10	1.18	0.92	1.04	1.13	0.83	0.97	1.07	1.12	1.21	1.25	1.06	1.15	1.22	1.00	1.10	1.18	0.92	1.04	1.13	0.83	0.97	1.07
Ultimate Wind Pressure (kPa)	0.61	0.71	0.76	0.55	0.64	0.72	0.49	0.59	0.68	0.41	0.53	0.62	0.33	0.46	0.56	0.98	1.14	1.22	0.88	1.03	1.16	0.78	0.94	1.09	0.65	0.84	1.00	0.54	0.73	0.89
Serviceability Wind Pressure (kPa)	0.41	0.48	0.51	0.37	0.43	0.49	0.33	0.40	0.46	0.28	0.36	0.42	0.23	0.31	0.38	0.46	0.53	0.57	0.41	0.48	0.54	0.37	0.44	0.51	0.31	0.39	0.47	0.25	0.34	0.42

Building Importance Level 3																													
Region	A															B													
Ultimate Wind Speed V1000 (m/s)	46															60													
Serviceability Wind Speed V25 (m/s)	37															39													
Terrain Category	1			1.5			2			2.5			3			1			1.5			2			2.5			3		
Height above ground (z)	10	25	50	10	25	50	10	25	50	10	25	50	10	25	50	10	25	50	10	25	50	10	25	50	10	25	50	10	25	50
$M_{z,cat}$	1.12	1.21	1.25	1.06	1.15	1.22	1.00	1.10	1.18	0.92	1.04	1.13	0.83	0.97	1.07	1.12	1.21	1.25	1.06	1.15	1.22	1.00	1.10	1.18	0.92	1.04	1.13	0.83	0.97	1.07
Ultimate Wind Pressure (kPa)	0.64	0.74	0.79	0.57	0.67	0.76	0.51	0.61	0.71	0.43	0.55	0.65	0.35	0.48	0.58	1.08	1.26	1.35	0.97	1.14	1.29	0.86	1.05	1.20	0.72	0.93	1.10	0.60	0.81	0.99
Serviceability Wind Pressure (kPa)	0.41	0.48	0.51	0.37	0.43	0.49	0.33	0.40	0.46	0.28	0.36	0.42	0.23	0.31	0.38	0.46	0.53	0.57	0.41	0.48	0.54	0.37	0.44	0.51	0.31	0.39	0.47	0.25	0.34	0.42

Building Importance Level 4																													
Region	A															B													
Ultimate Wind Speed V2000 (m/s)	48															63													
Serviceability Wind Speed V25 (m/s)	37															39													
Terrain Category	1			1.5			2			2.5			3			1			1.5			2			2.5			3		
Height above ground (z)	10	25	50	10	25	50	10	25	50	10	25	50	10	25	50	10	25	50	10	25	50	10	25	50	10	25	50	10	25	50
$M_{z,cat}$	1.12	1.21	1.25	1.06	1.15	1.22	1.00	1.10	1.18	0.92	1.04	1.13	0.83	0.97	1.07	1.12	1.21	1.25	1.06	1.15	1.22	1.00	1.10	1.18	0.92	1.04	1.13	0.83	0.97	1.07
Ultimate Wind Pressure (kPa)	0.69	0.81	0.86	0.62	0.73	0.82	0.55	0.67	0.77	0.46	0.60	0.71	0.38	0.52	0.63	1.19	1.39	1.49	1.07	1.26	1.42	0.95	1.15	1.33	0.80	1.03	1.22	0.66	0.90	1.09
Serviceability Wind Pressure (kPa)	0.41	0.48	0.51	0.37	0.43	0.49	0.33	0.40	0.46	0.28	0.36	0.42	0.23	0.31	0.38	0.46	0.53	0.57	0.41	0.48	0.54	0.37	0.44	0.51	0.31	0.39	0.47	0.25	0.34	0.42

Table 18 Internal Wind Pressures $C_{p,i}$ =0.5

$C_{p,i}$ = Internal wind pressure coefficient

Building Importance Level 2																													
Region	A															B													
Ultimate Wind Speed V500 (m/s)	45															57													
Serviceability Wind Speed V25 (m/s)	37															39													
Terrain Category	1			1.5			2			2.5			3			1			1.5			2			2.5			3		
Height above ground (z)	10	25	50	10	25	50	10	25	50	10	25	50	10	25	50	10	25	50	10	25	50	10	25	50	10	25	50	10	25	50
$M_{z,cat}$	1.12	1.21	1.25	1.06	1.15	1.22	1.00	1.10	1.18	0.92	1.04	1.13	0.83	0.97	1.07	1.12	1.21	1.25	1.06	1.15	1.22	1.00	1.10	1.18	0.92	1.04	1.13	0.83	0.97	1.07
Ultimate Wind Pressure (kPa)	0.76	0.89	0.95	0.68	0.80	0.90	0.61	0.74	0.85	0.51	0.66	0.78	0.42	0.57	0.70	1.22	1.43	1.52	1.10	1.29	1.45	0.97	1.18	1.36	0.82	1.05	1.24	0.67	0.92	1.12
Serviceability Wind Pressure (kPa)	0.52	0.60	0.64	0.46	0.54	0.61	0.41	0.50	0.57	0.34	0.44	0.52	0.28	0.39	0.47	0.57	0.67	0.71	0.51	0.60	0.68	0.46	0.55	0.64	0.38	0.49	0.58	0.31	0.43	0.52
Building Importance Level 3																													
Region	A															B													
Ultimate Wind Speed V1000 (m/s)	46															60													
Serviceability Wind Speed V25 (m/s)	37															39													
Terrain Category	1			1.5			2			2.5			3			1			1.5			2			2.5			3		
Height above ground (z)	10	25	50	10	25	50	10	25	50	10	25	50	10	25	50	10	25	50	10	25	50	10	25	50	10	25	50	10	25	50
$M_{z,cat}$	1.12	1.21	1.25	1.06	1.15	1.22	1.00	1.10	1.18	0.92	1.04	1.13	0.83	0.97	1.07	1.12	1.21	1.25	1.06	1.15	1.22	1.00	1.10	1.18	0.92	1.04	1.13	0.83	0.97	1.07
Ultimate Wind Pressure (kPa)	0.80	0.93	0.99	0.71	0.84	0.94	0.63	0.77	0.88	0.53	0.69	0.81	0.44	0.60	0.73	1.35	1.58	1.69	1.21	1.43	1.61	1.08	1.31	1.50	0.90	1.17	1.38	0.74	1.02	1.24
Serviceability Wind Pressure (kPa)	0.52	0.60	0.64	0.46	0.54	0.61	0.41	0.50	0.57	0.34	0.44	0.52	0.28	0.39	0.47	0.57	0.67	0.71	0.51	0.60	0.68	0.46	0.55	0.64	0.38	0.49	0.58	0.31	0.43	0.52
Building Importance Level 4																													
Region	A															B													
Ultimate Wind Speed V2000 (m/s)	48															63													
Serviceability Wind Speed V25 (m/s)	37															39													
Terrain Category	1			1.5			2			2.5			3			1			1.5			2			2.5			3		
Height above ground (z)	10	25	50	10	25	50	10	25	50	10	25	50	10	25	50	10	25	50	10	25	50	10	25	50	10	25	50	10	25	50
$M_{z,cat}$	1.12	1.21	1.25	1.06	1.15	1.22	1.00	1.10	1.18	0.92	1.04	1.13	0.83	0.97	1.07	1.12	1.21	1.25	1.06	1.15	1.22	1.00	1.10	1.18	0.92	1.04	1.13	0.83	0.97	1.07
Ultimate Wind Pressure (kPa)	0.87	1.01	1.08	0.78	0.91	1.03	0.69	0.84	0.96	0.58	0.75	0.88	0.48	0.65	0.79	1.49	1.74	1.86	1.34	1.57	1.77	1.19	1.44	1.66	1.00	1.29	1.52	0.82	1.12	1.36
Serviceability Wind Pressure (kPa)	0.52	0.60	0.64	0.46	0.54	0.61	0.41	0.50	0.57	0.34	0.44	0.52	0.28	0.39	0.47	0.57	0.67	0.71	0.51	0.60	0.68	0.46	0.55	0.64	0.38	0.49	0.58	0.31	0.43	0.52

Combination External Plus Internal Wind Pressures

$C_{fig,net} = (C_{fig,i} + C_{fig,e})\ K_c$

where:

$C_{fig,net}$ is the combination net pressure coefficient of $C_{fig,i}$ acting with $C_{fig,e}$ [Refer to Figure 6]. When calculating the combined internal with external wind pressure actions, $C_{p,i}$ is taken as 0.2 for side walls and leeward walls, and either – 0.3 when the building has all walls equally permeable or – 0.2 when the building is effectively sealed having non-openable windows.

K_c is a combination factor. It allows for a concession to the overall net wind pressure when considering the combination of external and internal wind pressures acting together in the same direction. When considering the combined effects of internal and external wind pressures, then K_c can be taken as 0.9, otherwise for all other cases K_c must be taken as 1.

As an alternative to determining the site specific wind pressures from AS/NZS 1170.2, a project may employ the services of a specialist wind engineering consultancy to determine the wind pressures associated with a specific building on a specific site. They are usually engaged to provide cost savings for large projects.

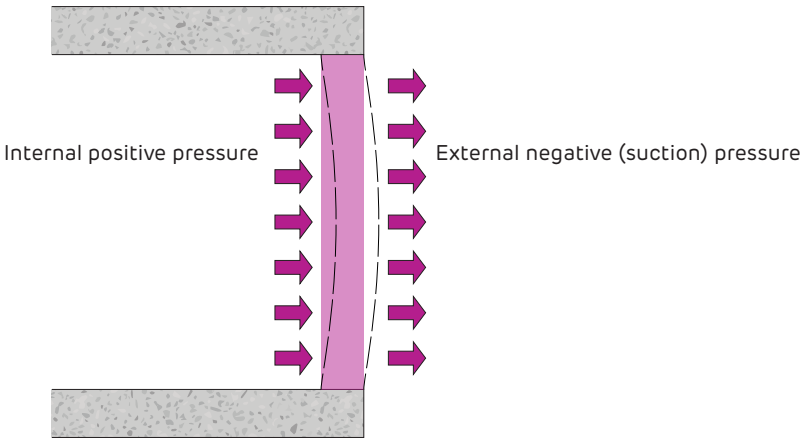

FIGURE 6 Example of internal and external wind pressures acting in the same direction
Total wind pressure ($C_{fig,net}$) acting on the external wall stud framing
Section view

Seismic Actions

Seismic actions for buildings and building elements are determined using *AS/NZS 1170.4 Earthquake Actions in Australia*. Seismic actions accelerate an object causing a corresponding load to be exerted. The load also results in displacement of the object which must be accounted for in structural design.

The forces generated on buildings and their respective elements must have a clear path to return the load to the buildings foundation. Displacements of building elements under the nominated load from the standard must also be allowed to occur without major structural failure or collapse. Some damage is expected to occur though depending on the magnitude of an actual earthquake event.

Lightweight walls, ceilings and their connections are considered architectural (non-structural) parts and components. The methods prescribed in AS/NZS 1170.4 to determine the seismic actions and design the architectural parts and components for a specific project are summarised below. As this is a simplified guide only, it is recommended to refer to the standard or seek professional engineering advice when determining the seismic actions for a specific building or building element.

To determine the seismic actions applied to lightweight walls and ceilings, the following items need to be determined:

1. Building Importance Level from the National Construction Code (NCC), Volume One, Section B1.2. This section of the NCC sets out the appropriate annual probability of exceedance limits for wind, snow and earthquake loads for the relevant importance level of the building. The building importance levels range from 1 (least important) to 4 (most important).

2. Determine the probability factor k_p from AS/NZS 1170.4 Clause 3.1. This is an amplification factor based on the annual probability of an earthquake event and is affected by the building importance level.

3. Determine the hazard factor Z from AS/NZS 1170.4 Clause 3.2. This factor is also an amplification factor related to the geographic location in Australia and the potential hazard that location presents.

4. Check the multiplication of the probability factor k_p and the hazard factor Z are not below the minimum outlined in AS/NZS 1170.4 Table 3.3.

5. Determine the site sub-soil class from Section 4. There are 5 classifications of sub-soil from strong rock to very soft soil. This is usually determined by geotechnical testing.

6. Determine the earthquake design category (EDC) from Table 2.1. The earthquake design categories are either I, II or III.

7. Design the lightweight wall or ceiling and their associated connections in accordance with Section 5 *Earthquake Design* and Section 8 *Design of Parts and Components.*

Earthquake Design Category I

The design of category I buildings and elements is limited to structures with a height of 12m maximum. Structures and components are designed using an equivalent lateral (horizontal) static load of 10% of the seismic weight acting at the centre of mass of the item being designed.

Vertical actions and pounding are not considered for this category except where any vertical actions arises from the structural analysis.

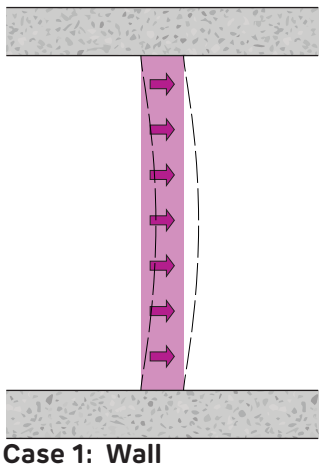

Case 1: Wall

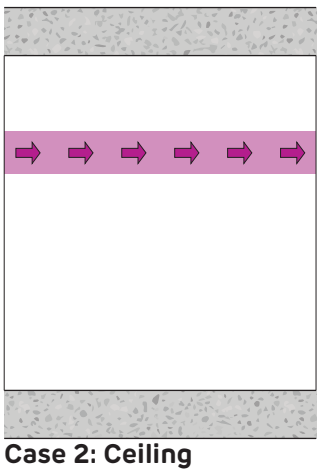

Case 2: Ceiling

FIGURE 7 Typical Seismic Actions for Lightweight Walls and Ceilings
Section view

Earthquake Design Category II

The design of architectural parts and components for category II is typically conducted in accordance with Section 8 of AS/NZS 1170.4.

Architectural parts and components along with their associated connections to the main structure, are typically designed for the earthquake forces determined via the Simple Method in Clause 8.2 or the Design Accelerations Method in Clause 8.3. They are also required to accommodate the anticipated inter-storey drift.

The inter-storey drift at the ultimate limit state is calculated from an equivalent static method of the building outlined in Section 6 and shall not exceed 1.5% of the storey height.

Earthquake Design Category III

Similar to category II, the architectural parts and components for category III are designed in accordance with Section 8 of AS/NZS 1170.4.

Also similar to category II, the architectural parts and components and their associated connections to the main structure are typically designed for the earthquake forces determined via the Simple Method in Section 8.2 or the Design Accelerations Method in Section 8.3. They are also required to accommodate the design inter-storey drift.

The inter-storey drift at the ultimate limit state calculated from a dynamic analysis of the building outlined in Section 7 and shall not exceed 1.5% of the storey height.

Forces on Components

The horizontal earthquake forces on the architectural parts and components are applied at the centre of gravity of the component. They must also be considered in any horizontal direction.

Fixings like the Siniat Screw Anchor range used to fix external walls and walls enclosing stairs, stair shafts, lifts and exit paths to the structure, must be designed for 150% of the anticipated seismic force determined via the Simple or Design Accelerations Methods.

Inter-Storey Drift

Inter-storey drift refers to the horizontal displacement between floors of a building under seismic load. AS/NZS 1170.4 determines the loads to be applied at each floor via an equivalent static method for category II buildings, or a dynamic analysis for category III buildings.

An accurate inter-storey drift displacement can be identified via structural analysis of the building under the loads applied at each floor, or simply limited to a maximum of 1.5% of the storey height.

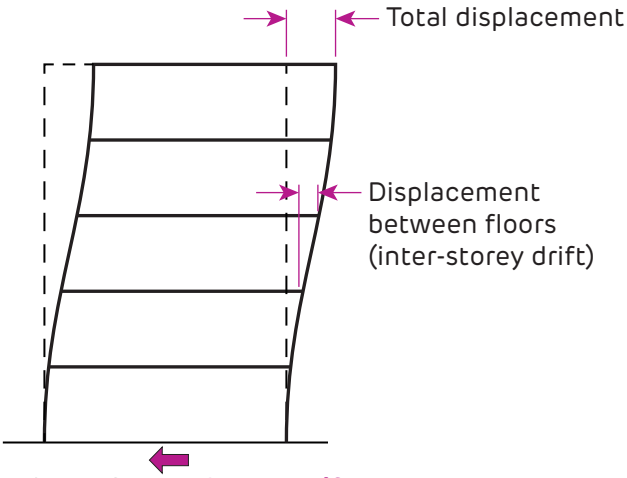

FIGURE 8 Inter-Storey Drift
Section

Simple Method

The horizontal force on the architectural parts and components using the simple method is determined using the equation:

$F_c = W_c\ k_p\ Z\ Ch(0)\ a_x\ I_c\ a_c / R_c$ but $> 0.05\ W_c$

where:

W_c is the seismic weight of the component.

k_p is the probability factor from Clause 3.1.

Z is the hazard factor from Clause 3.2.

Ch(0) is the bracketed value of the spectral shape factor for the period of zero seconds from Clause 6.4.

a_x is a height amplification factor to account for the height of the element above the ground

I_c is the component importance factor which is taken as 1.5 for critical for life safety components

a_c is the component amplification factor taken as 1 for light-weight walls and ceilings.

R_c = component ductility factor typically taken as 2.5 for light-weight walls and ceilings, and 1 for connections of those lightweight walls and ceilings.

Design Accelerations Method

$F_c = a_{floor}\ I_c\ a_c / R_c \leq 0.5\ W_c$

where:

a_{floor} is the effective floor acceleration at the level where the component in situated, and calculated using the equivalent static method of Section 6 or the dynamic analysis of Section 7. a_{floor} must not be $< k_p\ Z\ C_h\ (0)$.

All other factors in the equation are the same for the Simple Method.

Structural Analysis

Once all the loads on the walls and/or ceilings have been derived, an analysis is conducted using various load cases to determine the strength and stiffness requirements for the frame and lining.

Walls: Common load cases to satisfy the Ultimate Limit State (Strength):

Case 1: 1.35G
Case 2: 1.2G + W_{ult}
Case 3: 1.2G + 1.5Q_{impact}
Case 4: 1.2G + 1.5$Q_{handrail}$
Case 5: 1.2G + 1.5$Q_{basin\ /\ monitor\ arm}$
Case 6: 1.2G + 1.5Q_{shelf}
Case 7: 1.2G + 0.6Q_{shelf} + W_{ult}
Case 8: 1.2G + 0.6Q_{shelf} + Q_{impact}
Case 9: G + 0.6Q_{shelf} + E_{ult}

Walls: Common load cases to satisfy the Serviceability Limit State (Stiffness):

Case 1: G + W_{ser}, deflection limited to height/240 for flexible linings (i.e.: plasterboard)
Case 2: G + W_{ser}, deflection limited to height/250 for expressed jointed fibre cement
Case 3: G + W_{ser}, deflection limited to height/360 for brittle linings (i.e.: rendered fibre cement, tiled walls, masonry veneer, AAC walls)
Case 4: G + Q_{impact}, deflection limited to height/200 or 12mm maximum
Case 5: G + $Q_{handrail}$, deflection limited to height/480
Case 6: G + Qbasin / monitor arm, deflection limited to height/360
Case 7: G + Q_{shelf} + W_{ser}, deflection limited to height/360
Case 8: G + Q_{shelf}, deflection limited to height/480
Case 9: G + 0.6Q_{shelf} + E_{ser}, deflection limited to height/360

Ceilings: Common load cases to satisfy the Ultimate Limit State:

Case 1: 1.4G + 1.7U
Case 2: 1.2G + 1.2U + W_{ult}
Case 3: 0.9G + $W_{ult\ (uplift)}$
Case 4: G + U + E_{ult}

Ceilings: Common load cases to satisfy the Serviceability Limit State:

Case 1: G + U, deflection limited to span/500 for suspended concealed, horizontal stud, and top-hat frame ceilings.

Case 2: G + U + W_{ser}, deflection limited to span/200 for suspended ceilings (top cross rail, furring channel, batten)

Case 3: G + U + W_{ser}, deflection limited to span/360 or 12mm maximum, for stud ceilings and top hat ceilings.

Case 4: G + E_{ser}

where:

G is the dead load
Q is the live load
W_{ult} is the ultimate limit state wind load
W_{ser} is the serviceability limit state wind load
U is a nominal service load specific to ceiling systems equal to 3 kg/m^2
E_{ult} is the ultimate limit state earthquake load
E_{ser} is the serviceability limit state earthquake load

After the structural analysis is complete, the frame is designed using the relevant framing design standard [Refer to the Design Standards section], and the most appropriate frame and lining is selected to satisfy the predicted loads during the service life of the wall or ceiling system.

Fire Resistance

Fire Definitions

Fire Resistance Level

Fire systems are rated to withstand a fire under test conditions for a certain period of time. This time is known as the Fire Resistance Level (FRL) and consists of the three criteria listed below:

- Structural Adequacy
- Integrity
- Insulation

Figure 9 below shows an FRL of 60/60/60. This means that if a building element were exposed to a standard fire test, it would not be expected to fail for 60 minutes in each of the three criteria. The NCC specifies FRLs for building elements such as walls, columns, roofs and floors. These FRLs can be many combinations of the three criteria,
e.g. 90/-/-, 90/60/30 or -/60/60. A dash in the FRL means there is no requirement for that criterion.

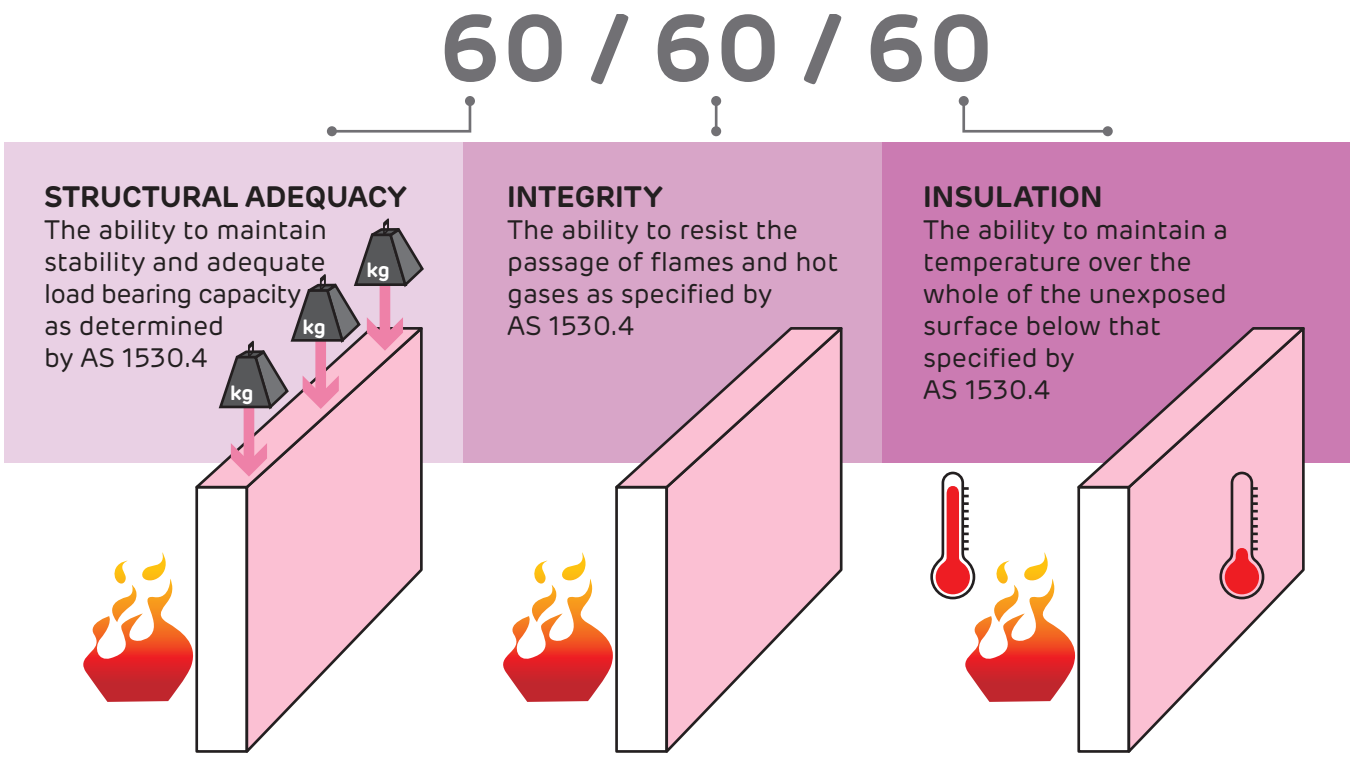

FIGURE 9 Fire Resistance Level

Fire testing is carried out in accordance with AS 1530.4 *Methods for fire tests on building materials, components and structures*. All fire rated plasterboard systems in this manual have been the subject of a report by an accredited testing authority.

Resistance to Incipient Spread of Fire (RISF)

Resistance to the Incipient Spread of Fire (RISF) is the ability of a ceiling to limit the temperature rise in the ceiling cavity [Figure 10]. The RISF is a requirement of the NCC in specific applications. They are appropriate where the ceiling is the primary fire barrier that limits fire spread via the ceiling space. The RISF for Siniat fire rated ceilings are stated in the system tables.

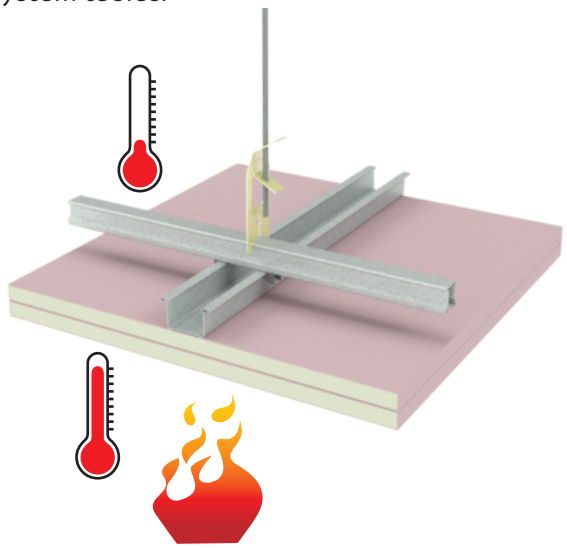

FIGURE 10 Resistance to Incipient Spread of Fire

Load Bearing or Non-load Bearing ?

If a building element is load bearing then it must have a Structural Adequacy component to the FRL, for example 60/60/60. The definition of load bearing from the NCC states that a structure is 'intended to resist vertical forces additional to those due to its own weight'. Therefore walls such as those holding up a floor or roof above are load bearing. While (in general) walls that span between concrete slabs and are not holding up the slab, are considered non-load bearing.

The NCC 'deemed to satisfy' provisions, specify FRLs based on whether the building element is load bearing or not [Refer to NCC Volume One, Specification C1.1]. For example, walls separating sole occupancy units in a Class 2 building of Type A construction (residential high rise) need an FRL of -/60/60 if they are non-load bearing and 90/90/90 if they are load bearing. Residential high rise buildings are usually slab to slab construction in which case the concrete columns are load bearing but the plasterboard infill walls are not.

If an FRL with Structural Adequacy is specified (e.g. 90/90/90) where there is no additional vertical load, a building element without Structural Adequacy may be used (e.g. -/90/90) [Refer to NCC Volume One, Schedule 5 Clause 6 Non-load bearing elements].

Standard Fire Test

AS 1503.4 Methods for fire tests on buildings materials, components and structures prescribes the heating conditions, test procedures and criteria for the determining the fire resistance level of building elements.

Completed wall or ceiling specimens are usually loaded onto one face of a fire furnace and then subjected to a standardised time - temperature curve [Figure 11] to determine its performance under fire conditions.

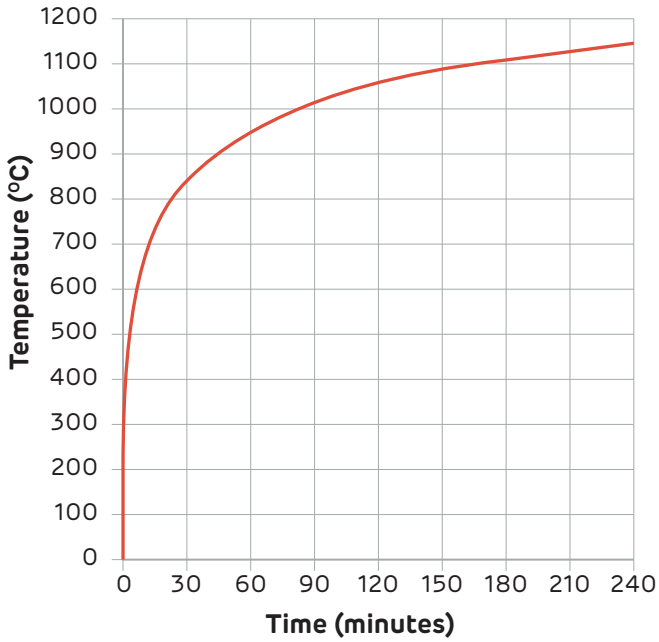

FIGURE 11 Standard Fire Test
Time - Temperature curve

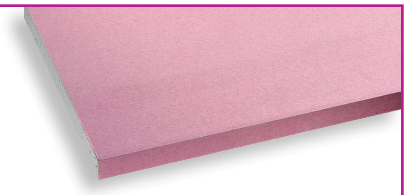

Plasterboard to Resist Fire

Siniat recommends the installation of **fire**shield, **multi**shield, **tru**rock or **tru**rock hd for wall and ceiling systems to control the spread of fire.

These specially formulated products contain additives that improve the natural fire resisting properties of the plasterboard.

Acceptable Variations to Fire Rated Systems

Fire rated systems must be built according to the installation instructions in this manual. However, there are some variations allowed that will not degrade the performance of the system:

- Increasing plasterboard thickness
- Increasing cavity width
- Increasing stud size or metal thickness
- Adding steel, timber or plywood noggings to support fixtures or service
- Decreasing stud spacing
- Decreasing fastener spacing
- Substituting 13mm **fire**shield with 13mm **multi**shield, 13mm **tru**rock or 13mm **tru**rock hd
- Substituting 16mm **fire**shield with 16mm **multi**shield or 16mm **tru**rock
- Substituting **masta**shield with **water**shield
- Adding additional linings to a system
- Adding tiles up to 32kg/m² per side.

Modifications to Fire Rated Systems

Fire rated systems are often modified by the installation of:

- Fire rated inspection hatches
- Fire rated power points
- Fire rated light fittings
- Fire rated doors
- Fire dampers
- Electrical cables
- Metal or plastic pipes
- Other fire rated penetrations.

It is the responsibility of the manufacturer of these components to ensure that the fire and acoustic properties of the plasterboard system are maintained.

Some modifications are detailed in this manual, many include the use of **bindex** fire and acoustic sealant. Any modification not covered in this manual must be according to the relevant manufacturer's instructions.

Construction Details

Construction details in Siniat literature show common situations for installers and designers with guidance on how systems are installed. Siniat does not exclude other construction details for situations not covered by our technical literature. The approved construction details in Siniat technical literature should be used as guides to create site-specific details using the same principles.

Construction details without a specific FRL noted may be used with all systems within that section; the number of layers can vary as well as the framing configuration, e.g. single stud, Acoustic Stud and double stud.

Smoke Walls

The purpose of a smoke wall is to prevent smoke passing from one side of a wall to the other. A smoke wall must be built from non-combustible materials like steel studs.

Doors and windows used in smoke walls must comply with requirements in the NCC Volume One, Specification C2.5. Ducts through the smoke wall must use a smoke damper, unless the duct is part of the smoke handling system and is required to function during a fire.

Class 9A Healthcare Buildings, Class 2 and 3 Residential Buildings

Smoke walls in Class 9a, 2 and 3 buildings must extend up to:

- The floor above, or
- A non-combustible roof covering, or
- A ceiling having an RISF of 60 minutes.

Class 9C Aged Care Buildings

Plasterboard used for smoke walls in Class 9c buildings must have a thickness of at least 13mm. Smoke walls in Class 9c buildings may also be lined on one side only and must extend up to:

- The floor above, or
- A non-combustible roof covering, or
- A jointed plasterboard ceiling with a minimum thickness of 13mm with all penetrations sealed.

Table 19 Fire Resistance Level Requirements for Class 2 and 3 Buildings - Type A

Construction	Element		Load Bearing FRL	Non-Load Bearing FRL
Type A without sprinkler	Internal Walls	Between or bounding SOU's, corridor walls and public lobbies	90/90/90	- /60/60
		Lift, stair and service shaft walls	90/90/90	- /90/90
		Lower storey car park	90/90/90 and be of masonry or concrete	n/a
		Other load bearing internal walls, beams, trusses and columns	90/ - / - *	n/a
		Other internal walls inside a SOU	90/ - / -	-
		All internal walls required to have an FRL with respect to integrity and insulation, must extend to the floor above, or to a ceiling directly below the roof with RISF 60 minutes, or to the underside of the roof covering if it is non-combustible.		
	External Walls where the distance to the fire source feature is	< 1.5m	90/90/90	- /90/90
		1.5m to < 3m	90/60/60	- /60/60
		≥ 3m	90/60/30	- / - / -
	Floors		90/90/90	n/a
	Roofs		-	n/a
Type A with sprinkler system for a building with rise in storeys of ≤ 3, or 4 if the lowest storey is for car parking	Internal Walls	Between or bounding SOU's, corridor walls and public lobbies	60/60/60	- / - / - if lined with 13mm plasterboard
		Lift, stair and service shaft walls	60/60/60	- / - / - if lined with 13mm plasterboard
		Lower storey car park	90/90/90 and be of masonry or concrete	n/a
		Other load bearing internal walls, beams, trusses and columns	90/ - / - *	n/a
		Other internal walls inside a SOU	90/ - / -	-
		All internal walls must extend to the floor above, or to a ceiling with RISF 60 minutes, or to the underside of the roof covering if it is non-combustible.		
	External Walls where the distance to the fire source feature is	< 1.5m	90/90/90 from outside 60/60/60 from inside	- /90/90
		1.5m to < 3m	90/60/60 from outside 60/60/60 from inside	- /60/60
		≥ 3m	90/60/30 from outside 60/60/30 from inside	- / - / -
	Floors		60/60/60	n/a
	Roofs		-	n/a

1. This table is a summary only and is not intended as a substitute for the NCC as it does not consider all building classes, requirements, applications or certain concessions which may apply. [Refer to the NCC for the full details of fire resistance level requirements]
2. 'Service shaft walls' include ventilation, pipe, garbage and the like shafts not used for the discharge of hot products of combustion
3. SOU = Sole Occupancy Unit
4. '-' indicates there is no requirement for that criterion.
5. * concessions apply. May be reduced to FRL 60/60/60 for top floor only of buildings with effective height ≤ 25m.

Table 20 Fire Resistance Level Requirements for Class 2 and 3 Buildings - Type B

Construction	Element		Load Bearing FRL	Non-Load Bearing FRL
Type B without sprinkler	Internal Walls	Between or bounding SOU's, corridor walls and public lobbies	60/60/60	- /60/60
		Lift, stair and service shaft walls	90/90/90	- /90/90
		Other load bearing walls and columns	60/ - / -	
		Other internal walls inside a SOU	90/ - / -	- / - /-
		All internal walls required to have an FRL with respect to integrity and insulation, except a wall that bounds a SOU in the topmost storey and there is only one unit in that storey, must extend to the floor above, or to a ceiling with RISF 60 minutes, or to the underside of the roof covering if it is non-combustible.		
	External Walls where the distance to the fire source feature is	< 1.5m	90/90/90	- /90/90
		1.5m to < 3m	90/60/30	- /60/30
		3m to < 9m	90/30/30	- / - / -
		9m to < 18m	90/30/ -	- / - / -
		≥ 18m	- / - / -	- / - / -
	Floors		30/30/30, or 13mm fire grade plasterboard or ceiling with RISF 60 minutes.	n/a
	Roof		-	n/a
Type B with sprinkler system	Internal Walls	Between or bounding SOU's, corridor walls and public lobbies	60/60/60	- / - / - if lined with 13mm plasterboard
		Lift, stair and service shaft walls	60/60/60	- / - / - if lined with 13mm plasterboard
		Other load bearing walls and columns	60/ - / -	n/a
		Other internal walls inside a SOU	90/ - / -	- / - / -
		All internal walls must extend to the floor above, or to a ceiling with RISF 60 minutes, or to the underside of the roof covering if it is non-combustible.		
	External Walls where the distance to the fire source feature is	< 1.5m	90/90/90 from outside 60/60/60 from inside	- /90/90
		1.5m to < 3m	90/60/30 from outside 60/60/30 from inside	- /60/30
		3m to < 9m	90/30/30 from outside 60/30/30 from inside	- / - / -
		9m to < 18m	90/30/ - from outside 60/30/ - from inside	- / - / -
		≥ 18m	- / - / -	- / - / -
	Floors		30/30/30, or 13mm fire grade plasterboard or ceiling with RISF 60 minutes.	n/a
	Roof		-	n/a

1. This table is a summary only and is not intended as a substitute for the NCC as it does not consider all building classes, requirements, applications or certain concessions which may apply. [Refer to the NCC for the full details of fire resistance level requirements]
2. 'Service shaft walls' include ventilation, pipe, garbage and the like shafts not used for the discharge of hot products of combustion
3. SOU = Sole Occupancy Unit
4. '-' indicates there is no requirement for that criterion.

Table 21 Fire Resistance Level Requirements for Class 2 and 3 Buildings - Type C

Construction	Element		Load Bearing FRL	Non-Load Bearing FRL
Type C without sprinkler	Internal Walls	Between or bounding SOU's, corridor walls and public lobbies	60/60/60	-/60/60
		Bounding stairs	60/60/60	-/60/60
		Other load bearing walls and columns	60/ - / -	
		Other internal walls inside a SOU	30/ - / - or covered with 13mm fire grade plasterboard	- / - / -
		All internal walls must extend to the floor above, or to a ceiling with RISF 60 minutes, or to the underside of the roof covering if it is non-combustible.		
	External Walls where the distance to the fire source feature is	< 1.5m	90/90/90 from outside	- / - / -
		≥ 1.5m	- / - / -	- / - / -
	Floors		30/30/30, or 13mm fire grade plasterboard	n/a
	Roof		-	n/a

1. This table is a summary only and is not intended as a substitute for the NCC as it does not consider all building classes, requirements, applications or certain concessions which may apply. [Refer to the NCC for the full details of fire resistance level requirements]
2. 'Service shaft walls' include ventilation, pipe, garbage and the like shafts not used for the discharge of hot products of combustion
3. SOU = Sole Occupancy Unit
4. '-' indicates there is no requirement for that criterion.

Acoustics

Sound Waves

Sound waves create small pressure fluctuations in a transmission medium like air or water. The sound pressure is measured in decibels (dB) using a specific logarithmic scale. Decibel is the unit of measurement used when describing the sound level in a room.

Sound waves also known as vibrations, and are measured in hertz (Hz) which is the number of vibrations per second. The length of a sound wave varies – low pitch sounds have a long wavelength whereas high pitch sounds have a shorter wavelength. Accordingly low pitches (long wavelengths) have a low frequency and high pitches (short wavelength) have a high frequency.

Perception of Sound

People with normal hearing can perceive sounds between 20 Hz and 20,000 Hz, however the ear is at its most sensitive in the frequencies between 250 and 3150 Hz, also known as the consonant frequency range and where the most important information is contained for speech.

Voice communication is essential for humans and understanding what is said involves much more than the meaning of the words. Tone of voice and rhetoric are also important elements in understanding.

The perception of sound is subjective and contextual, what is perceived as good sound by one person can be very different to another person's view. Physiological factors, taste, culture, habit, mood and environment can all affect our perception of what constitutes positive and negative sound.

Sound Strategies

It is important that the acoustics of a space match the function of that space; and that everyone that resides or works in that space experiences good acoustic comfort.

In order to modify the sound experienced in a room, there are a number of strategies that can be employed:

- Block the sound from entering the room
- Absorb the sound inside the room
- Spread the sound around the room
- Redirect the sound away from and within the room
- Emphasise the sound in parts of the room
- Mask the sound in the room

The following pages look at the principles and definitions of sound insulation – a strategy for blocking sound, i.e. preventing it from entering a room, and sound absorption and diffusion – strategies for dealing with the sound inside a room.

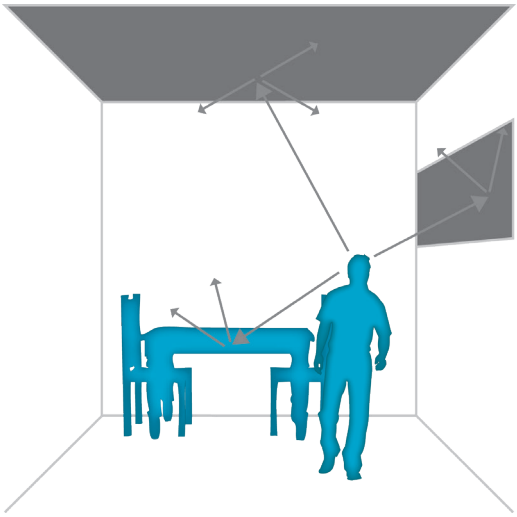

FIGURE 12 Sound Absorption and Diffusion

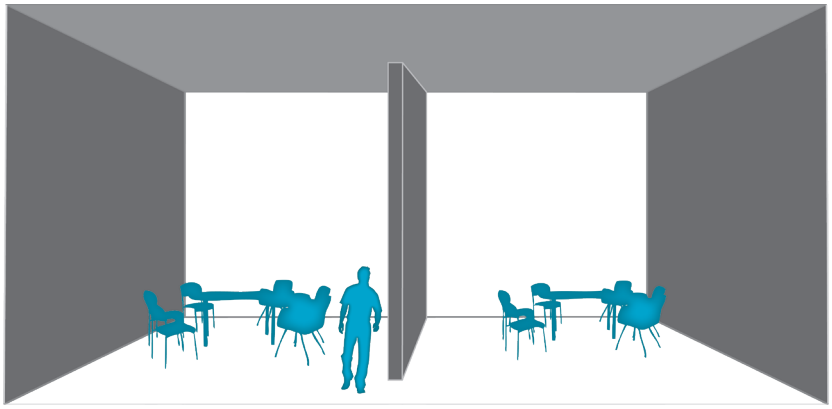

FIGURE 13 Sound Insulation

Sound Insulation

Acoustic Terms and Definitions

R_w (Weighted Sound Reduction Index)

Rw describes the airborne sound insulating power of a building element. It is a laboratory measured value that can apply to walls, ceiling/floors, ceiling/roofs, doors or windows. The higher the number, the greater the sound insulating power of the building element.

For example, an increase in the Rw of a wall by 10 points will reduce the perceived loudness of sound passing through the wall by about half. Table 21 shows how the sound insulating effectiveness of walls depends on their Rw values.

R_w+C_{tr} (R_w Plus Spectrum Adaptation Term)

Rw + Ctr is equal to Rw with the addition of a low frequency sound correction, Ctr. The use of Rw + Ctr has been adopted due to the increase in low frequency sound sources such as surround sound systems, traffic and aircraft noise, drums and bass guitars. Two walls can have the same Rw rating but have different resistance to low frequency sound, thus a different Rw + Ctr.

D_{nTw} and $D_{nTw}+C_{tr}$ (Measured On-Site)

These values are the equivalent of Rw and Rw + Ctr, but are measured on-site. Rw is the value measured in an acoustic laboratory, while DnTw is the value measured on-site.

An on-site measured value of DnTw + Ctr is permitted to be 5 points lower than the Rw + Ctr value. Where the NCC may call for an Rw + Ctr ≥ 50, the same requirement may be satisfied by measuring DnTw + Ctr ≥ 45 on-site.

$L_{n,w}$ (Impact Sound Insulation Rating)

$L_{n,w}$ describes how easily impact sound travels through a floor. Impact sound is generated by sources such as dryers, washing machines and heeled shoes on a wooden floor.

Unlike R_w values, better performing floors have lower values. Therefore when specified, Ln,w values are maximums while Rw values are minimums. For example, the NCC requires some floors to have $L_{n,w} \leq 62$.

Impact Sound Insulation

Walls that have Impact Sound Insulation are defined in the NCC as walls that do not have any rigid mechanical connection between two separate leaves except at the periphery.

Systems in this manual that satisfy this NCC requirement are staggered stud plasterboard walls with no noggings, and walls that use resilient mounts.

Impact sound insulation with discontinuous construction

Discontinuous Construction is defined in the NCC as walls that have a gap of at least 20mm between two separate leaves, and:

- for masonry, where wall ties are required to connect leaves, the ties are of the resilient type, and
- for other than masonry, there is no mechanical linkage between leaves except at the periphery.

Double stud plasterboard walls are classed as 'discontinuous'.

Ceiling Attenuation Class (CAC)

Ceiling Attenuation Class (CAC) indicates the ceiling's ability to reduce airborne sound transmission via the ceiling cavity when the dividing wall does not extend past the ceiling to the underside of the floor or roof.

In this manual CAC is expressed as Rw and Rw + Ctr ratings. These represent the sound reduction from one room to the next via the two ceilings and the cavity above the ceiling.

The noise in the source room can pass through the wall and through the ceiling cavity. To compensate for the additional noise level in the receiving room, when sound isolation is important, Siniat recommends using wall and CAC ceiling systems that both have an Rw rating 3 points higher than the requirement.

According to the NCC Volume One, Part F5.5, where a wall required to have sound insulation has a floor or roof above, the wall must continue to the underside of the floor or roof above, or a ceiling that provides the sound insulation required for the wall.

Table 22 Effect of Various Walls on Sound Insulation Performance

R_W	Effect of Different Values of R_W on Sound Insulation Performance
25	Normal speech can be heard easily
30	Loud speech can be heard easily
35	Loud speech can be heard but not understood
42	Loud speech heard as murmur
45	Must strain to hear loud speech
48	Loud speech can be barely heard
53	Loud speech cannot be heard
63	Music heard faintly, bass notes 'thump'
70	Loud music still heard very faintly

Sound Insulation Requirements

Performance requirements of the NCC relating to sound insulation shown in table 22 can be satisfied in a number of ways that include the following:

1. Deemed-to-Satisfy Construction

Construct a wall or ceiling system that complies with the deemed-to-satisfy provisions of the NCC Volume One, Specification F5.2 (2). This section of the NCC details generic systems that satisfy the NCC sound insulation requirements. However, more efficient solutions can be found in this manual.

2. Laboratory Test

Many of the systems in this manual were tested in an acoustic laboratory according to AS 1191:2002. Acoustic testing laboratories are designed to ensure that flanking paths do not occur. Tested systems are constructed with extreme care to achieve optimum performance. For these reasons, on-site performance may be different to laboratory performance.

3. On-site Testing

Conduct on-site acoustic testing on a wall or ceiling system. This is a 'verification method' accepted by the NCC to confirm the performance requirements are met. Also the effectiveness of the complete installed system
can be verified by on-site acoustic testing.

4. Certification by an Acoustic Consultant

An acoustic consultant can certify that the construction on a particular site meets the NCC requirements. This certification includes the effectiveness of penetrations and flanking paths. It usually involves some level of
on-site testing.

5. Acoustic Opinion

Acoustic consultants can provide acoustic opinions on the sound insulation rating of building elements. An acoustic opinion may provide sufficient evidence of compliance depending on the type and size of building. Check with the building certifier prior to construction.

Higher Acoustic Requirements

Where performance is critical or noise is higher than normal, accredited acoustic engineers should be consulted. Their role is to ensure that design and construction will meet any specific requirements.

All acoustic ratings in this manual are either test results or professional opinions based on test information. Acoustic opinions in this manual were provided by professional acoustic consulting engineers.

Acoustic predictions for systems not published in Siniat technical literature can often be generated by acoustic modelling software. Contact Siniat Technical Services for an acoustic prediction based on the Siniat product range.

The Association of Australian Acoustical Consultants (AAAC) offer detailed guidance on acceptable acoustic performance. They have published their own star rating system. Ratings range from 2 to 6 stars and are based on field testing by an AAAC consultant to verify that they have been achieved. More information about AAAC Star Ratings for apartments and townhouses is available at www.aaac.org.au

Acoustic Testing and Actual Performance

Attention to detail during construction is important for achieving good sound insulation, as performance may be is determined by the weakest link in the system. Performance of installed acoustic systems may fall short of laboratory measured results. Acoustic measurements in a typical laboratory test represent the maximum performance that can be achieved.

Actual site conditions are usually less than ideal and sound flanking paths normally exist around the perimeter of the system. Flanking paths may be minimised by sealing the perimeter with sealant and by installing services using acoustically rated details.

Table 23 Sound Insulation Requirements For Sole Occupancy Units (SOU)

	Airborne Sound Insulation	Impact Sound Insulation
Building Class 1 – NSW, Vic, Qld, Tas, WA, SA and ACT		
Walls separating a bathroom, toilet, laundry or kitchen and a habitable room (other than a kitchen) in adjoining SOUs.	Rw + Ctr ≥ 50	✓Discontinuous
Walls separating SOUs in all other cases.	Rw + Ctr ≥ 50	
Walls or ceilings separating a duct, soil, waste or water supply pipe or storm water pipe from a habitable room.	Rw + Ctr ≥ 40	
Walls or ceilings separating a duct, soil, waste or water supply pipe or storm water pipe from a kitchen, bathroom or other non-habitable room.	Rw + Ctr ≥ 25	
Building Class 2 & 3 – NSW, Vic, Qld, Tas, WA, SA and ACT		
Walls separating habitable rooms in adjoining SOUs.	Rw + Ctr ≥ 50	
Walls separating kitchens, toilets, bathrooms and laundries in adjoining SOUs.	Rw + Ctr ≥ 50	
Walls between a bathroom, toilet, laundry or kitchen and a habitable room (other than a kitchen) in adjoining SOUs.	Rw + Ctr ≥ 50	✓Discontinuous
Walls between an SOU and a public corridor, public lobby, stairway or the like or parts of a different classification.	Rw ≥ 50	
Walls between an SOU and a plant room or lift shaft.	Rw ≥ 50	✓Discontinuous
Walls or ceilings separating a duct, soil, waste or water supply pipe or storm water pipe from a habitable room.	Rw + Ctr ≥ 40	
Walls or ceilings separating a duct, soil, waste or water supply pipe or storm water pipe from a kitchen or other non-habitable room.	Rw + Ctr ≥ 25	
Floors between SOUs and between an SOU and a plant room, lift shaft, stairway, public corridor, public lobby or the like, or parts of a different classification.	Rw + Ctr ≥ 50	Ln,w ≤ 62
Building Class 1, 2 and 3 – Northern Territory		
Walls separating a bathroom, toilet, laundry or kitchen and a habitable room (other than a kitchen) in adjoining SOUs.	Rw ≥ 50	Impact sound resistant
Walls separating SOUs in all other cases.	Rw ≥ 45	
Walls or ceilings separating a soil or waste pipe from a habitable room.	Rw ≥ 45	
Walls or ceilings separating a soil or waste pipe from a kitchen, bathroom or other non-habitable room.	Rw ≥ 30	
Floors between SOUs.	Rw ≥ 45	
Building Class 9c – All Australian States and Territories		
Walls separating SOUs from a kitchen or laundry.	Rw ≥ 45	✓Discontinuous for other than masonry
Walls and floors separating SOUs and walls separating SOUs from a bathroom, toilet, plant room or utilities room.	Rw ≥ 45	
Walls or ceilings separating a duct, soil, waste or water supply pipe or storm water pipe from a habitable room.	Rw + Ctr ≥ 40*	
Walls or ceilings separating a duct, soil, waste or water supply pipe or storm water pipe from a kitchen or other non-habitable room.	Rw + Ctr ≥ 25#	

This table is a summary only and is not intended as a substitute for the NCC. [Refer to the NCC for the full details of sound insulation requirements]
* For Building Class 9c in Northern Territory, Rw ≥ 45
# For Building Class 9c in Northern Territory, Rw ≥ 30

Habitable Room

A habitable room means a room used for normal domestic activities and:

- includes a bedroom, living room, lounge room, music room, television room, kitchen, dining room, sewing room, study, playroom, family room, home theatre and sunroom; but
- excludes a bathroom, laundry, water closet, pantry, walk-in wardrobe, corridor, hallway, lobby, photographic darkroom, clothes-drying room, and other spaces of a specialised nature occupied neither frequently nor for extended periods.

Sound Insulation Performance of Wall and Ceiling Systems

Sound insulation ratings for single steel stud walls are based on 600mm stud spacing and the thinnest BMT.

Sound insulation performance listed in systems tables may vary due to decreased stud spacing and increased steel stud thickness (BMT) to the tested systems. Sound insulation performance may also vary due to any additional linings on battens or on separate stud walls.

The sound insulation rating of a basic wall or ceiling system can be upgraded by using a combination of:

- **sound**shield or **tru**rock
- Additional plasterboard layers
- Insulation in the cavity
- Resilient mounts
- **acoustic** stud
- Larger size studs
- Double stud walls
- Staggered stud walls
- Larger cavity size.

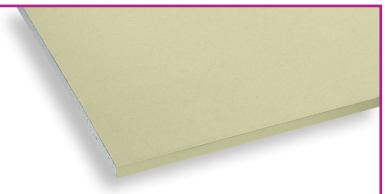

soundshield for Superior Noise Control

Siniat recommends the installation of **sound**shield wall and ceiling systems to minimise noise from aircraft, traffic and neighbours.

soundshield is a plasterboard with enhanced sound insulation qualities. **sound**shield has a super high-density* core which helps to resist the transmission of noise into rooms.

*The denser the plasterboard, the better it will resist sound transfer.

Sound Absorption

Sound absorption is the ability of a material to reduce the amount of sound energy reflecting back into the same space.

As a general rule heavy objects with smooth surfaces such as concrete, reflect sound and light objects with porous surfaces such as fabric, absorb sound.

Sound absorbers can be materials like Fletcher Insulation's glasswool products or they can be a ceiling made from perforated panels like Siniat **Crea**tex or Siniat **Crea**son with a cavity behind.

Sound Absorption Coefficients

If a material is 100% reflective then its sound absorption coefficient α is 0, and if it is 100% non-reflective, then α is 1.

The same material can have different sound absorption coefficients at different frequencies.

The sound absorption coefficient of a material or system is measured in a reverberation chamber in an acoustic test laboratory. The measured sound absorption coefficient at a one-third octave band frequency such as 100 Hz, 125 Hz and 160 Hz is called α_s. For each octave band frequencies such as 125 Hz, 250 Hz and 500 Hz, the average of the measured α_s of three consecutive one third octave band frequencies is rounded to the nearest multiple of 0.05, which is then called the practical sound absorption coefficient, α_p.

Noise Reduction Coefficient (NRC)

A single number sound absorption rating obtained from an arithmetic average of sound absorption coefficients, α_s, at 250 Hz, 500 Hz, 1000 Hz and 2000 Hz rounded to the nearest multiple of 0.05.

The higher the NRC, the better the sound absorption of a material or system in the normal frequency range of human speech.

Weighted Sound Absorption Coefficient (α_w)

Designing room acoustics based on NRC can be misleading and result in poor acoustic performance in practice. That's because NRC is an average value that can mask high and low values at different frequencies.

A more sophisticated way to measure acoustic performance is to calculate a weighted sound absorption coefficient (α_w). An α_w value is calculated by comparing the sound absorption coefficients α_p at 250 Hz, 500 Hz, 1000 Hz, 2000 Hz and 4000 Hz to a standard curve [*Refer AS ISO 11654:2002*].

The α_w rating is more commonly used in Europe than NRC; it gives a better picture of a material's performance across all of the frequencies important to human hearing, as the α_w figure is reduced by any low performance frequencies with respect to the reference curve. In other words, any weak points in the material's acoustic performance are uncovered by an α_w value.

Table 24 Sound Absorption Coefficients

Frequency	α_s	α_p
100	0.45	0.55
125	0.58	
160	0.67	
200	0.76	0.85
250	0.82	
315	0.92	
400	0.95	0.90
500	0.94	
630	0.85	
800	0.82	0.80
1000	0.80	
1250	0.79	
1600	0.75	0.65
2000	0.65	
2500	0.61	
3150	0.55	0.60
4000	0.60	
5000	0.70	
Average	0.73	
NRC	0.80	
α_w	0.70	

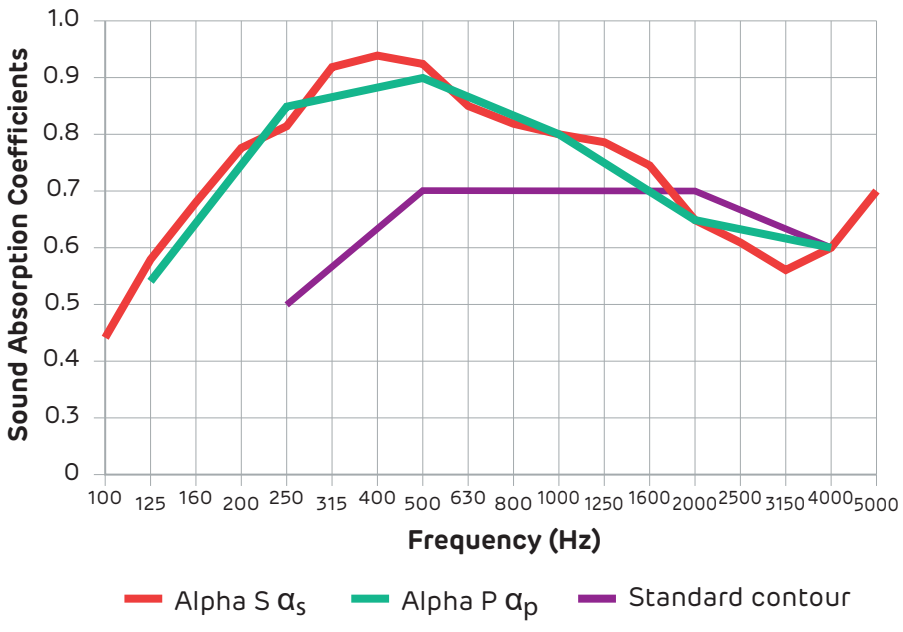

FIGURE 14 Sound Absorption Profile Comparing NRC with α_w

Sound Reflection and Diffusion

Sound reflection in multiple scattered directions is called sound diffusion. Sound diffusion is helpful to spread sound evenly inside a closed space and in combination with sound absorption, helps avoid echoes and uneven reverberation time distribution throughout the room. This creates a uniform and favourable acoustics environment.

Siniat Createx or Siniat Creason assist sound diffusion via irregular sound reflection due to the perforations in the products.

Reverberation Time (RT)

In an enclosed space, sound gets reflected from hard, smooth surfaces creating reverberation, the persistence of sound even after its source has stopped. Sounds reflected from multiple surfaces increase the noise level in a room.

The time required for the reverberated noise level to decay by 60dB is called reverberation time, represented by RT (or RT60) measured in seconds.

Spaces without sound absorbing materials such as large, unfurnished rooms have long reverberation times while spaces with lots of sound absorbers such as cinemas have short reverberation times.

Reverberation Time Requirements

Reverberation time requirements are dependent on the function of a room. Long reverberation times make a space acoustically 'live', while short reverberation times reduce noise and if too short can deaden the sound.
To enhance speech intelligibility it is important to have a suitable reverberation time across the frequency range.

AS/NZS 2107:2016 provides recommended design sound levels and reverberation times for building interiors [Refer to Table 25].

Table 25 AS/NZS 2107:2000 Reverberation Time Requirements

Application	Recommended Reverberation Time (seconds)
Primary school classroom	0.4 ~ 0.5
Secondary school classroom	0.5 ~ 0.6
Libraries, open plan offices, medical consulting rooms, hospital corridors & lobbies	0.4 ~ 0.6
Call centres	0.1 ~ 0.4
Meeting rooms, office corridors & lobbies, assembly halls, private offices	0.6 ~ 0.8
Hospital wards, laboratories, waiting rooms & reception areas	0.4 ~ 0.7
Speech auditoriums, lecture theatres, conference & convention centres, drama theatres	0.7 ~ 1.0

Siniat Reverberation Time Calculator

Siniat offers an easy to use online reverberation time calculator. It includes reverberation time requirements in accordance with AS/NZS 2107:2016 and estimates the amount and type of sound absorbers required.

Siniat Reverberation Time Calculator

Use Siniat Reverberation Time Calculator by clicking on the link or by using your phone's camera on the QR code.

Choosing the Right Siniat Sound Absorption Systems

- Sound absorption systems can be selected from the range of premium acoustic solutions from Siniat, including our Createx and Creason perforated plasterboards. There are several options which cover a range of design and performance requirements like absorption ratings (w or NRC), or sound attenuation ratings (CAC).
- Two products or systems with similar NRC or μw ratings might perform differently in practice. The sound absorption of a product or system at different frequencies must be considered while also evaluating reverberation time and other acoustics characteristics, such as sound diffusion, reflection, attenuation, etc.
- The sound absorption performance of cavity or resonance absorbers such as Siniat **Crea**tex and Siniat **Crea**son can vary depending on the perforation type, perforation ratio, depth of ceiling cavity and the type and thickness of insulation material used in the cavity.
- The placement of sound absorbing materials must take into account the occupants and activity to ensure that sound is absorbed, reflected and spread in the required manner. It is often common practice to only use sound absorbing materials on the ceiling, however in narrow or large rooms with high ceilings, placement of sound absorbers on the walls may be necessary to achieve the right acoustic environment.



For Sound Absorption Performance

Siniat recommends the installation of **Crea**tex and **Crea**son perforated acoustic linings to create a comfortable acoustic environment and enhance audibility.

Createx and **Crea**son are available in a range of perforation patterns and have the added benefit of air-cleaning technology.

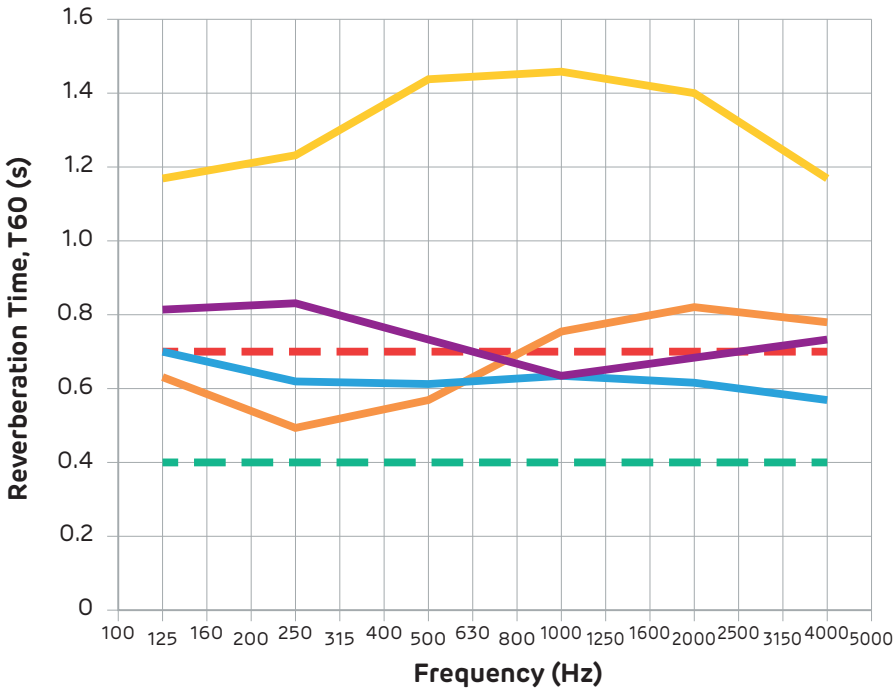

Figure 15 illustrates that wider frequency analysis is important when selecting an acoustic material.

Ceilings 2, 3 and 4 all use a material that has a single number sound absorption rating of 0.7, but with different results in practice.

For instance, Ceiling 2 meets reverberation time requirements at lower frequencies only and Ceiling 4 meets them at only 1000 Hz and 2000 Hz. Only Ceiling 3 meets reverberation time at all frequencies.

FIGURE 15 Reverberation Time Comparison
Calculated using Siniat Reverberation Time Calculator for 10m long x 7.5m wide x 4m high reception room in a hospital for hard and smooth surfaced walls, sparsely occupied and lightly furnished.

Thermal Performance

The Importance of Total R-Value for Energy Efficiency

Energy efficient construction requires a building envelope that resists the transfer of heat. This thermal resistance is measured as an R-Value (m^2K/W).

Total R-Value is one of the most important indicators of the thermal performance of a building element. The higher the Total R-Value, the better the thermal insulation, i.e. the longer it takes the heat to get into the building (in summer) or out of the building (in winter).

Total R-Value is defined in the National Construction Code (NCC 2019 Volume One) as the sum of the R-Values of individual component layers in a composite element. This includes any building material, insulating material, airspace, thermal bridging and associated surface resistances.

Definition of R-Value

R-Value is the thermal resistance of a component determined by dividing its thickness by its thermal conductivity. Total R-value is the sum of the components with thermal resistance and surfaces in the system.

Total R-Value along the insulation pathway
$R_T = R_{Si} + R_1 + R_2 + ... + R_n + R_{Se}$

Where R_{Si} is the thermal resistance of the internal surface and R_{Se} is the thermal resistance of the external surface; both depend on temperature, speed of air flow and the emissivity of the surface. R_n is the thermal resistance of nth layer parallel to the heat flow direction.

The Total R-Value formula above does not take into account the effects of thermal bridging and hence by itself does not comply with NCC 2019 Volume One for Class 2 to 9 buildings. However, it still complies with NCC 2019 Volume Two for Class 1 and 10 buildings and Section J of NCC 2009 Volume One.

Winter vs Summer

The R-Value of an individual component may vary in different temperatures, as its thermal conductivity depends on the mean temperature of the material. The higher the mean temperature (i.e. in summer) the higher the thermal conductivity and hence a lower R-Value.

In a solid material, such as concrete or plasterboard, the effect of temperature on thermal conductivity is marginal, but in a thermal insulating material like glasswool, the effect can be greater. The surface thermal resistances, R_{Si} and R_{Se} in the above formula may also vary in winter and summer.

The effect of temperature and the direction of heat flow on R-Value of an air space, such as the cavity in a wall or roof, are even more significant. Therefore, the Total R-Value of a building system may vary in winter (heat flow outwards) and summer (heat flow inwards).

Total System U-Value

Construction systems can also be evaluated by the thermal transmittance value, or U-Value (W/m^2K). This is the inverse of the thermal resistance R-Value. In this case, the lower the number, the better the thermal insulation performance.

Reflective Air Space

Heat transfer may happen by conduction (transfer via contact of materials, such as heat transfer in solids), convection (transfer via physical movement of material, like heat transfer in liquids and gases) and radiation (transfer without any material via electromagnetic waves, such as solar radiation). Reflective surfaces such as aluminium foil can effectively block the heat transfer via radiation, and hence increase the total R-Value of a building element.

However it's important to be cautious while using the reflective surface's contribution towards the Total R-Value. A very basic principle is that the reflective surface must always face a free air cavity.

The reflectivity of sarking and wall membranes varies and this will impact on the contributing R-value.

Calculating Thermal Performance

Fletcher insulation has developed FletcherSpec™ Pro that is a thermal prediction calculator that can be used to determine thermal performance of roof and wall systems inclusive of the type of wall membrane and impact of air space. It can also verify performance against the NCC. Please click here for access to FletcherSpec™ Pro.



For Thermal Performance

Siniat recommends Fletcher Insulation to provide a cost-effective, thermal and acoustic solutions for energy-efficient construction.

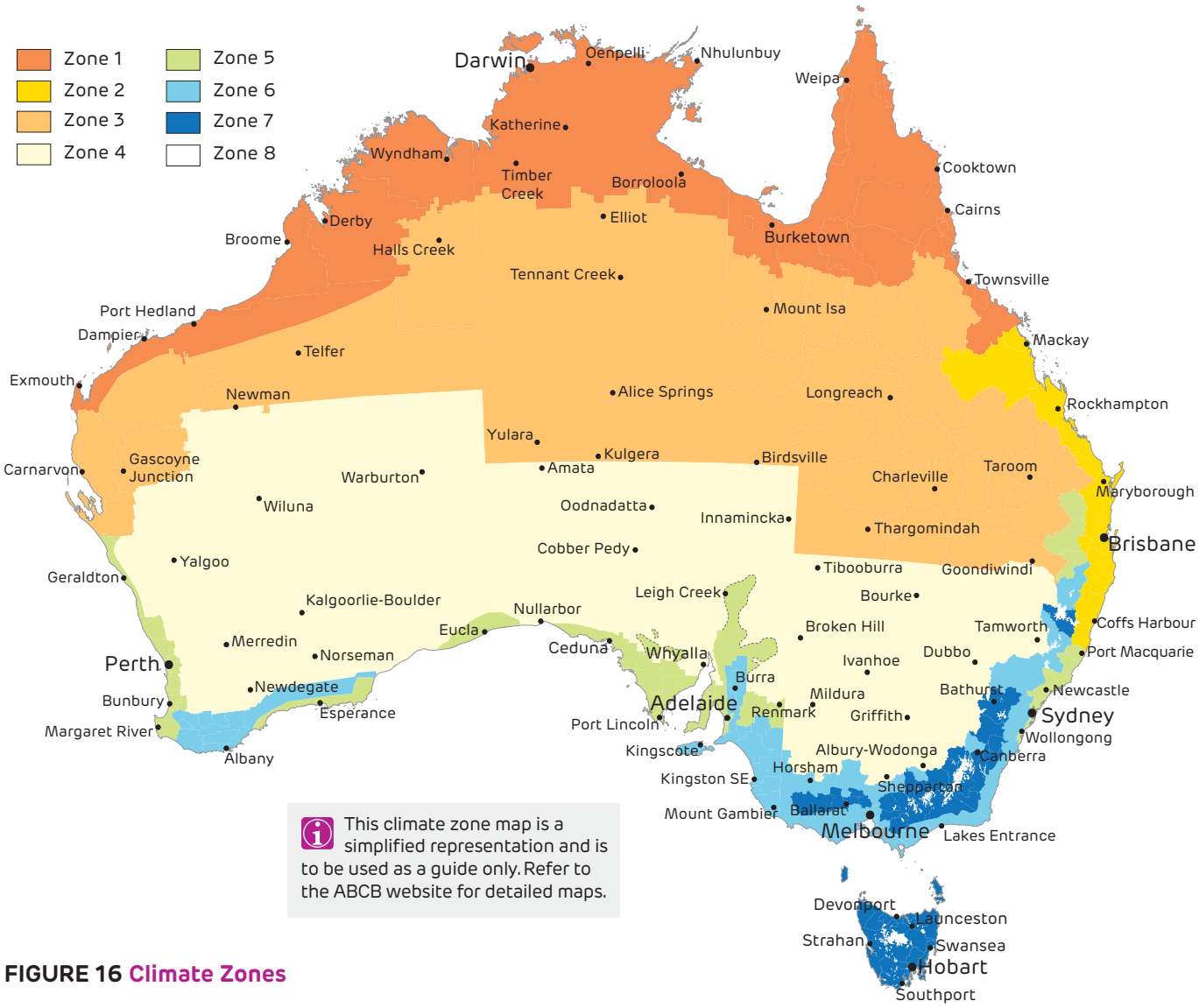

FIGURE 16 Climate Zones

Climate Zones

Australia has a diverse climate ranging from hot summers to cold winters, with varying degrees of humidity levels and rainfall. Depending on the location, buildings will need specific consideration for the climate experienced, performance expected and the construction systems used.

The National Construction Code (NCC) therefore defines 8 climate zones, each with their own specific performance requirements for heating, cooling and energy efficiency for buildings. These climate zones have different performance attributes that impact products used, ie: Vapour permeable membranes is climate zone specific.

A high resolution version of the climate zone map, as well as state based versions are available by following the link below to the Australian Buildings Codes Board (ABCB) website.

Thermal Requirements

In an effort to reduce greenhouse gas emissions, new buildings have provisions to limit the amount of energy required to operate them. These building provisions are contained in the NCC and are applicable to houses and most building types.

There are several ways to satisfy the performance requirements of the NCC, including deemed-to-satisfy provisions or alternative means including verification methods.

The deemed-to-satisfy provisions have been summarised in the following tables. Please note, almost all states also have their own specific requirements that must be followed. Refer to the NCC for the complete details.

NCC 2019 Deemed-to-Satisfy Thermal Requirements - Class 1 and 10

Table 26 Roof Minimum Total R-Value - Class 1 and 10

Climate Zone		1	2 Altitude < 300m	2 Altitude ≥ 300m	3	4 and 5	6 and 7	8
Direction of heat flow		Down	Down	Down and Up	Down and Up	Up	Up	Up
Upper surface solar absorptance value	≤ 0.4	3.1	4.1	4.1	4.1	4.1	4.6	6.3
	> 0.4 to ≤ 0.6	4.1	4.6	4.6	4.6	4.6	5.1	6.3
	> 0.6	5.1	5.1	5.1	5.1	5.1	5.1	6.3

1. This table is a summary only and is not intended to be a substitute for the NCC. Tables do not consider all building classes, requirements, state government provisions, and concessions which may apply. Refer to the NCC for the full details.
2. In climate zones 1 to 5, the total R-Value can be reduced by 0.5 when the insulation is laid on the ceiling and the roof space is ventilated. Refer to NCC Volume Two, Section 3.12.1.2 Roofs.
3. Refer to roof sheeting / tile manufacturer for accurate solar absorptance values.
4. A thermal break of minimum R-Value 0.2 is required when metal sheet roofing is directly fixed to metal roof framing and does not have a ceiling lining or has a ceiling lining fixed directly to metal purlins, metal rafters or metal battens. Refer to NCC Volume Two, Section 3.12.1.2 (c)

Table 27 External Wall Minimum Total R-Value - Class 1 and 10

Climate Zone	1 to 5	6 and 7	8
Total R-Value	2.8 or 2.4 with certain external wall shading	2.8	3.8

1. This table is a summary only and is not intended to be a substitute for the NCC. Tables do not consider all building classes, requirements, state government provisions, and concessions which may apply. Refer to the NCC for the full details.
2. Thermal breaks are required for steel frame external walls that have either no internal wall lining or when the internal wall lining is directly fixed to the steel frame, and there is light-weight cladding or metal sheeting also directly fixed the outer side of the steel stud frame. The thermal break must have a minimum R-Value of 0.2.

Table 28 Suspended Floor (without in-slab heating) Minimum Total R-Value - Class 1 and 10

Climate Zone	1	2	3	4	5	6	7	8
Direction of heat flow	Up			Down				
Total R-Value	1.5	1.0	1.5	2.25	1.0	2.25	2.75	3.25

1. This table is a summary only and is not intended to be a substitute for the NCC. Tables do not consider all building classes, requirements, state government provisions, and concessions which may apply. Refer to the NCC for the full details.

NCC 2019 Deemed-to-Satisfy Thermal Requirements - Class 2 to 9

For Class 2 to 9 buildings, the required Total R-Value and Total System U-Value must allow for thermal bridging.

Table 29 Roof and Ceiling Minimum Total R-Value - Class 2 to 9

Climate Zone	1	2	3	4	5	6	7	8
Direction of heat flow	Down	Down	Down	Down	Down	Down	Up	Up
Total R-Value	3.7	3.7	3.7	3.7	3.7	3.2	3.7	4.8

1. This table is a summary only and is not intended to be a substitute for the NCC. Tables do not consider all building classes, requirements, state government provisions, and concessions which may apply. Refer to the NCC for the full details.
2. The required Total R-Value must include allowance for thermal bridging.
3. In climate zones 1 to 7, the solar absorptance of the upper surface of a roof must not be more than 0.45.
4. Refer to roof sheeting / tile manufacturer for accurate solar absorptance values.
5. A thermal break of minimum R-Value 0.2 is required when metal sheet roofing is directly fixed to metal roof framing and does not have a ceiling lining or has a ceiling lining fixed directly to metal purlins, metal rafters or metal battens. Refer to NCC Volume One, Section J0.4 Roof thermal breaks.

Table 30 Walls and Glazing Maximum Total System U-Value - Class 2 to 9

Climate Zone	1	2	3	4	5	6	7	8
Building Class 2 common area, Class 5, 6, 7, 8, 9b or 9a other than a ward area	U2.0							
Building Class 3, 9c, or 9a ward area	U1.1	U2.0	U1.1	U1.1	U2.0	U1.1	U1.1	U0.9

1. This table is a summary only and is not intended to be a substitute for the NCC. Tables do not consider all building classes, requirements, state government provisions, and concessions which may apply. Refer to the NCC for the full details.
2. Total System U-Value of display glazing must not be greater than U5.8.

Table 31 Wall-glazing Construction Minimum Total R-Value - Class 2 to 9

Climate Zone		1	2	3	4	5	6	7	8
Wall is < 80% of the area of the wall-glazing construction		1.0							
Wall is ≥ 80% of the area of the wall-glazing construction	Building Class 2 common area, Class 5, 6, 7, 8, 9b or 9a other than a ward area	2.4	1.4						
	Building Class 3, 9c, or 9a ward area	3.3	1.4	3.3	2.8	1.4	2.8	2.8	3.8

1. This table is a summary only and is not intended to be a substitute for the NCC. Tables do not consider all building classes, requirements, state government provisions, and concessions which may apply. Refer to the NCC for the full details.
2. Maximum solar admittance of wall-glazing construction must also be calculated. Refer to NCC Volume One, Section J1.5

Table 32 Floors Minimum Total R-Value - Class 2 to 9

Climate Zone	1	2	3	4	5	6	7	8
Direction of heat flow	Up	Up and Down		Down				
Floor without an in-slab heating or cooling system	2.0	2.0		2.0				3.5
Floor with an in-slab heating or cooling system	3.25	3.25		3.25				4.75

1. This tables is a summary only and is not intended to be a substitute for the NCC. Tables do not consider all building classes, requirements, state government provisions, and concessions which may apply. Refer to the NCC for the full details.

Wet Areas

The NCC requires wet area construction to protect the occupants from dangerous or unhealthy conditions, and to protect the building from damage. Acceptable construction for wet areas is detailed in the NCC and Australian Standard AS 3740:2010, Waterproofing of Domestic Wet Areas.

watershield, **multi**shield, **tru**rock and **tru**rock hd are all water resistant plasterboards. The installation of these products in accordance with Section 3.4 of this manual complies with the requirements for wet areas from AS 3740 and the NCC.

multishield, **tru**rock and **tru**rock hd are water resistant plasterboards that are also fire resistant and can be substituted for **fire**shield in all systems.

watershield, **multi**shield, **tru**rock and **tru**rock hd are manufactured to high internal standards that meet or exceed the requirements for water resistant gypsum board within Australian Standard AS 2588:2018, Gypsum Plasterboard.

watershield, **multi**shield, **tru**rock and **tru**rock hd are water resistant, however they are not waterproof. Direct contact with water over time must be avoided and if plasterboard has been water damaged, it must be replaced.

Precautions against condensation listed in Section 2.2 'Condensation and Ventilation' must be followed.

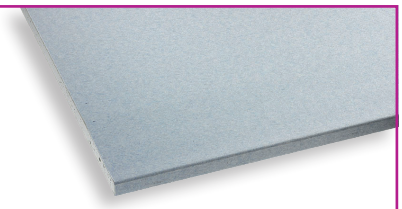

Water Resistant Plasterboard for Wet Areas

Siniat recommends the installation of **water**shield to resist moisture in wet areas like showers, bathrooms and laundries. For areas that require a fire rating as well as water resistance Siniat recommends **multi**shield, **tru**rock and **tru**rock hd.

watershield, **multi**shield, **tru**rock and **tru**rock hd are ideal substrates for tiles as they are dimensionally stable.

Impact Resistance

Areas subject to wear and tear need special consideration to reduce damage and maintenance costs. High traffic and wear areas are commonly found in:

- Shopping centres
- Educational facilities
- Hotels
- Airports
- Correctional centres
- Hospitals
- Garages
- Gymnasiums
- Corridors
- Rumpus rooms.

Testing of Impact Resistant Linings

trurock and **tru**rock hd have been tested for three types of impact resistance

- Soft body representing a person impacting a wall
- Large hard body representing intentional damage
- Small hard body representing incidental damage; every day wear and tear.

Soft Body Impact

The soft body test involves swinging a sand filled bag into a test wall with studs at 600mm centres and simulates the kind of loads applied to a wall system by the human body.

Soft body impact was tested in accordance with NCC Volume One, C1.8, meeting the impact requirements for fire rated walls and fire isolated exits.

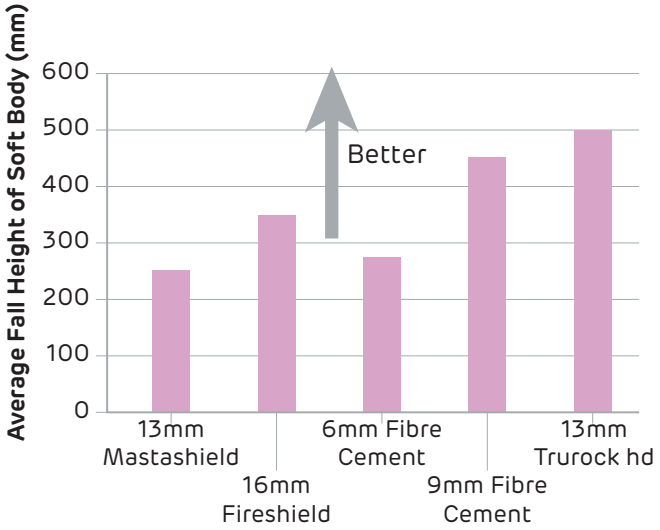

FIGURE 18 Large Hard Body Impact Testing

Large Hard Body Impact - 5kg Steel Ball

Hard body tests were carried out by dropping a steel ball from different heights and measuring the depth of the indentation caused by the impact. Hard body tests simulate loads such as a trolley or swinging a heavy suitcase.

Large hard body impact resistance was tested with a 5 kg spherical steel weight, swung from a height of 300mm. It has about the same energy as a cricket ball travelling at 60 km/h. This impact simulates a reasonable kick with a steel capped boot which makes a hole in standard 13mm plasterboard.

The number of impacts it took to penetrate the lining was recorded. Penetration was defined by the ability of a 10mm diameter probe to pass through the lining when applied with 2.5 kg of force.

13mm standard plasterboard was penetrated after 1 impact, 13mm **tru**rock withstood a further 3 hits before being penetrated on the 4th impact. 13mm **tru**rock hd was penetrated on the 10th impact.

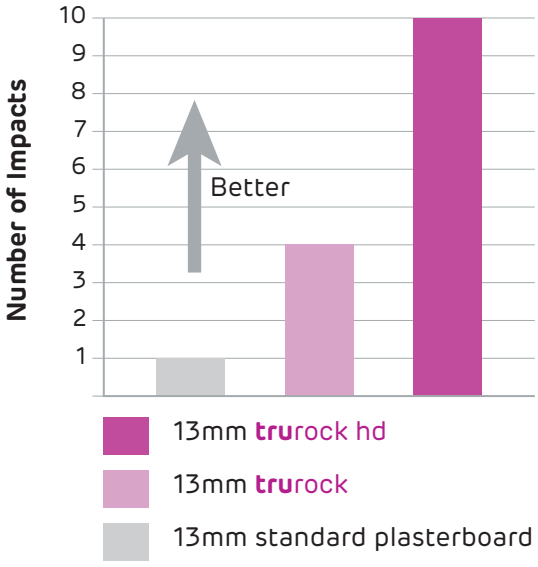

FIGURE 17 Soft Body Impact Testing

Small Hard Body Impact - 510g Steel Ball

Small hard body impact resistance was tested with a 50mm steel ball weighing 510 grams, dropped onto 400mm square plasterboard samples. The samples were placed on a 300mm square aluminium support sitting on concrete:

- Standard 13mm plasterboard was completely penetrated at a drop height of 2.4m while **tru**rock only sustained a dent 2mm deep
- At a 1.6m drop height, 13mm standard plasterboard suffered an impact more than 4mm deep, while **tru**rock showed only a minor dent 1mm deep.

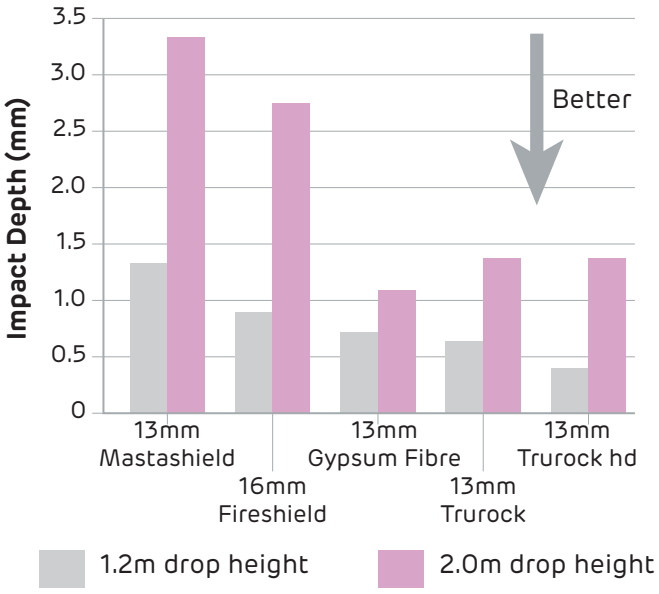

FIGURE 19 Small Hard Body Impact Testing
1.2m and 2.0m drop heights

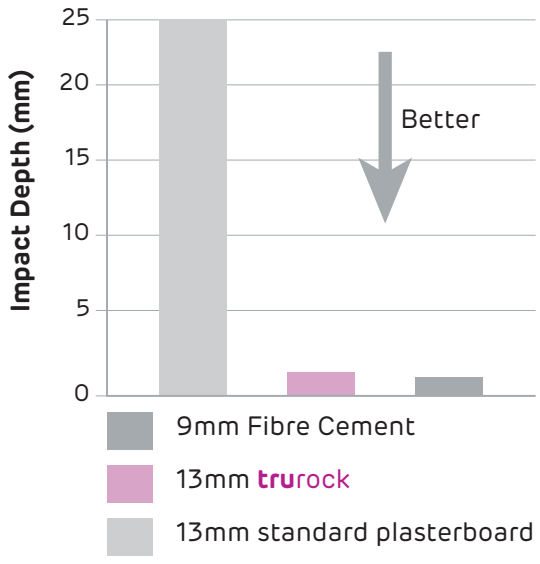

FIGURE 20 Small Hard Body Impact Testing
2.4m drop height

Benefits of Trurock

- High resistance to marks, scores, dents and holes
- Twice as tough and hard as standard 13mm plasterboard.

13mm **tru**rock can substitute 13mm **fire**shield in any system and maintain the fire and acoustic performance. 16mm **tru**rock can also substitute 16mm **fire**shield.

trurock is not intended to safeguard against damage from deliberate attack with heavy tools or in areas where heavy moving machinery may contact the walls (e.g. unprotected forklift operating areas).

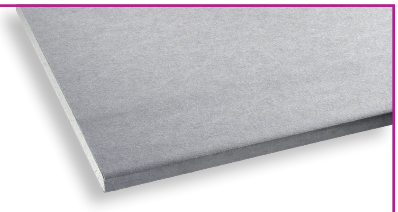

Impact Resistance

Siniat recommends the installation of **tru**rock with a high density core and heavy duty face and back paper, to minimise wear and tear in high traffic areas.

trurock hd is an impact resistant plasterboard reinforced with a continuous fibreglass mesh embedded in a high density core.

X-Ray Resistance

Medical X-ray diagnostic rooms require the use of protective barriers to shield operators and occupants of adjacent areas against unacceptable levels of X-ray radiation.

The level of shielding required depends on:

- X-ray workload and frequency of use
- Direction of X-ray beam, voltage of X-ray tube, number of exposures and X-ray current
- Occupancy and usage of areas adjacent to X-ray suites
- Position of the X-ray unit and the controls in the room
- The dimensions of the room housing the equipment.

Protection usually takes the form of X-ray absorbing sheet material on the walls of the room in which equipment is operated, together with suitably shielded windows and doors. X-ray shielding may also be required on the floors and ceilings of X-ray facilities in multi-storey buildings.

Every Australian State and Territory has individual requirements for radiation shielding of diagnostic medical facilities. A Health Physicist or Radiation Consultant will be typically be involved in projects to ensure that the local requirements for radiation shielding are fulfilled, according to the regulations of the State or Commonwealth.

The advantages of using GIB **x-block**® Shielding systems are:

- Lead free and environmentally friendly
- Easy to install and joint as standard plasterboard
- Enhances other important performance requirements such as noise control and fire ratings
- Eliminates the need for backing joints with lead strips.

X-ray Resistance Energy Levels

X-ray radiation is measured in kilovolts peak (kVp). Depending on the type of radiation equipment used in the room, diagnostic facilities will have different requirements for shielding:

- CT 120-140 kVp
- General radiographic rooms 60-90 kVp
- Dental 60-80 kVp
- Mammography 25-35 kVp

Other facilities such as nuclear medicine suites may use higher energy X-rays or different types of radiation and additional shielding may be necessary. The level and quality of radiation differs between applications, therefore a Health Physicist must always be involved in determining the shielding requirements for X-ray diagnostic facilities.



GIB **X-Block**®
For Radiation Shielding

Siniat recommends the use of GIB **x-block**® systems to provide X-ray radiation protection in medical X-ray diagnostic rooms within medical facilities and dental clinics.

GIB **x-block**® is a lead-free plasterboard system with high levels of barium sulphate which provides an effective radiation barrier. It eliminates the need for costly and complex installation procedures usually associated with installing lead based lining solutions.

GIB **x-block**® systems use GIB **x-block**® Jointing Compound, a compound specifically designed to give lead equivalent joints on walls and ceilings using GIB **x-block**® plasterboard.

Systems and Installation Guide





SYSTEMS	**72**
SYSTEM DIRECTORY	72
INSTALLATION	**101**
GENERAL REQUIREMENTS	101
FRAMING	102
WORKED EXAMPLE	117
STEEL PROFILE INFORMATION	118
PLASTERBOARD LAYOUT	125
PLASTERBOARD FIXING	126
CONSTRUCTION DETAILS	**141**
PENETRATIONS	**168**
FIXINGS TO PLASTERBOARD	**192**

3.1 Internal Steel Framed Partition Walls

Internal steel framed walls are used in commercial and high-rise applications such as office buildings and apartment blocks. They are light weight, quick to install, and the components are easy to deliver on site.

This section includes systems, installation instructions and construction details for general and fire rated internal steel stud walls.

System Directory

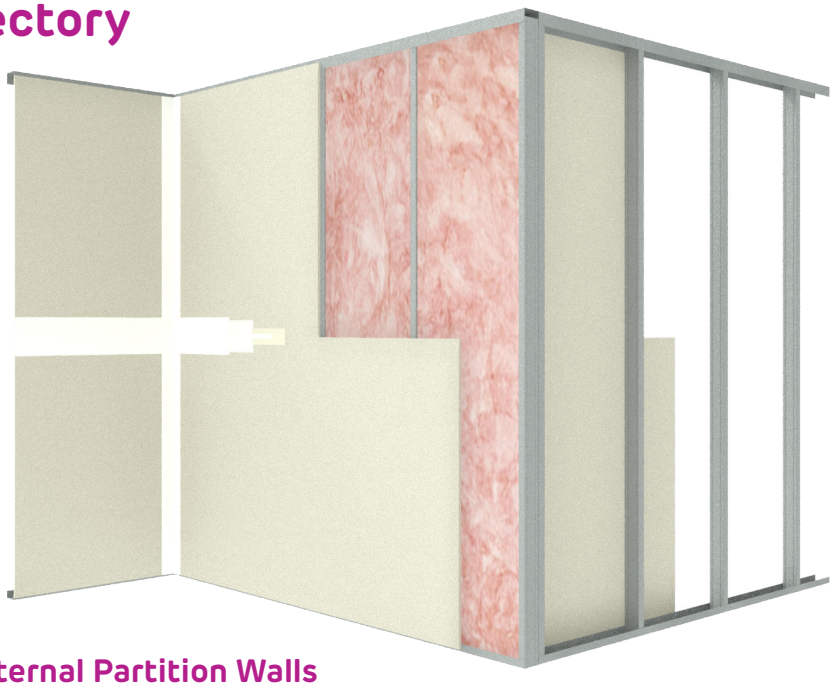

Non-fire Rated Internal Partition Walls

System	Side 1	Side 2	Frame	FRL	Acoustics[1]	
					Rw	Rw+Ctr
SSW1	1 x 10mm **masta**shield	-	Stud	-		
SSW10	1 x 10mm **masta**shield	1 x 10mm **masta**shield	Stud	-	40	31
SSW11	1 x 10mm **masta**shield	2 x 10mm **masta**shield	Stud	-	45	35
SSW12	2 x 10mm **masta**shield	2 x 10mm **masta**shield	Stud	-	50	40
SSW210	1 x 10mm **sound**shield	1 x 10mm **sound**shield	Stud	-	43	34
SSW211	1 x 10mm **sound**shield	2 x 10mm **sound**shield	Stud	-	49	39
SSW212	2 x 10mm **sound**shield	2 x 10mm **sound**shield	Stud	-	53	44
SSW4	1 x 13mm **masta**shield	-	Stud	-	29	25
SSW15	1 x 13mm **masta**shield	1 x 13mm **masta**shield	Stud	-	43	33
SSW16	1 x 13mm **masta**shield	2 x 13mm **masta**shield	Stud	-	49	39
SSW17	2 x 13mm **masta**shield	2 x 13mm **masta**shield	Stud	-	53	44
SSW215	1 x 13mm **sound**shield	1 x 13mm **sound**shield	Stud	-	52	44
SSW216	1 x 13mm **sound**shield	2 x 13mm **sound**shield	Stud	-	55	49
SSW217	2 x 13mm **sound**shield	2 x 13mm **sound**shield	Stud	-	43	33
SSW276	1 x 10mm **sound**shield	1 x 10mm **sound**shield	Acoustic stud	-	47	38
SSW277	1 x 10mm **sound**shield	2 x 10mm **sound**shield	Acoustic stud	-	50	42
SSW278	2 x 10mm **sound**shield	2 x 10mm **sound**shield	Acoustic stud	-	57	48
SSW85	1 x 13mm **masta**shield	1 x 13mm **masta**shield	Acoustic stud	-	46	37
SSW86	1 x 13mm **masta**shield	2 x 13mm **masta**shield	Acoustic stud	-	50	41
SSW87	2 x 13mm **masta**shield	2 x 13mm **masta**shield	Acoustic stud	-	56	48
SSW281	1 x 13mm **sound**shield	1 x 13mm **sound**shield	Acoustic stud	-	50	42
SSW282	1 x 13mm **sound**shield	2 x 13mm **sound**shield	Acoustic stud	-	57	49
SSW283	2 x 13mm **sound**shield	2 x 13mm **sound**shield	Acoustic stud	-	62	54
SSW20	1 x 10mm **masta**shield	1 x 10mm **masta**shield	Staggered stud	-	42	31
SSW21	1 x 10mm **masta**shield	2 x 10mm **masta**shield	Staggered stud	-	47	35
SSW22	2 x 10mm **masta**shield	2 x 10mm **masta**shield	Staggered stud	-	52	42
SSW220	1 x 10mm **sound**shield	1 x 10mm **sound**shield	Staggered stud	-	45	33
SSW221	1 x 10mm **sound**shield	2 x 10mm **sound**shield	Staggered stud	-	50	40
SSW222	2 x 10mm **sound**shield	2 x 10mm **sound**shield	Staggered stud	-	54	46
SSW25	1 x 13mm **masta**shield	1 x 13mm **masta**shield	Staggered stud	-	45	33
SSW26	1 x 13mm **masta**shield	2 x 13mm **masta**shield	Staggered stud	-	50	40
SSW27	2 x 13mm **masta**shield	2 x 13mm **masta**shield	Staggered stud	-	54	46
SSW225	1 x 13mm **sound**shield	1 x 13mm **sound**shield	Staggered stud	-	48	40
SSW226	1 x 13mm **sound**shield	2 x 13mm **sound**shield	Staggered stud	-	52	46
SSW227	2 x 13mm **sound**shield	2 x 13mm **sound**shield	Staggered stud	-	58	51

1. Stud, Acoustic Stud and Staggered stud acoustic values determined using 92mm cavity with glasswool insulation.

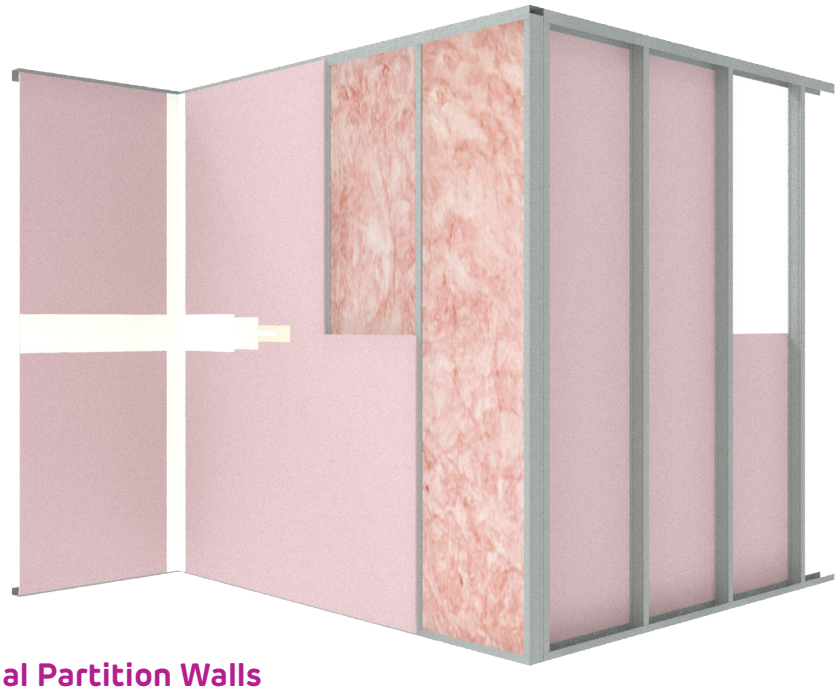

Fire Rated Internal Partition Walls

System	Side 1	Side 2	Frame	FRL		Acoustics[1]	
						Rw	Rw+Ctr
SSW300	1 x 13mm **fire**shield	-	Stud			30	26
SSW301	2 x 13mm **fire**shield	-	Stud	-/30/30	30/30/30	34	30
SSW302	3 x 13mm **fire**shield	-	Stud	-/90/90	90/90/90	37	34
SSW310	1 x 13mm **fire**shield	1 x 13mm **fire**shield	Stud	-/60/60	30/30/30	46	36
SSW311	1 x 13mm **fire**shield	2 x 13mm **fire**shield	Stud	-/90/90	30/30/30	50	42
SSW312	2 x 13mm **fire**shield	2 x 13mm **fire**shield	Stud	-/120/120	90/90/90	55	47
SSW314	3 x 13mm **fire**shield	3 x 13mm **fire**shield	Stud	-/180/180	120/120/120	59	**53**
SSW910	1 x 13mm **tru**rock	1 x 13mm **tru**rock	Stud	-/60/60	30/30/30	47	39
SSW911	1 x 13mm **tru**rock	2 x 13mm **tru**rock	Stud	-/90/90	30/30/30	52	45
SSW912	2 x 13mm **tru**rock	2 x 13mm **tru**rock	Stud	-/120/120	90/90/90	56	**50**
SSW510	1 x 13mm **fire**shield	1 x 13mm **fire**shield + 1 x 6mm Villaboard™	Stud	-/60/60	30/30/30	51	42
SSW512	1 x 13mm **fire**shield + 1 x 6mm Villaboard™	1 x 13mm **fire**shield + 1 x 6mm Villaboard™	Stud	-/90/90	30/30/30	55	47
SSW303	1 x 16mm **fire**shield	-	Stud	-	-		
SSW304	2 x 16mm **fire**shield	-	Stud	-/60/60	60/60/60	35	31
SSW305	3 x 16mm **fire**shield	-	Stud	-/120/120	120/120/120	38	35
SSW315	1 x 16mm **fire**shield	1 x 16mm **fire**shield	Stud	-/90/90	60/60/60	48	39
SSW316	1 x 16mm **fire**shield	2 x 16mm **fire**shield	Stud	-/120/120	60/60/60	52	45
SSW317	2 x 16mm **fire**shield	2 x 16mm **fire**shield	Stud	-/120/120	120/120/120	56	**50**
SSW319	3 x 16mm **fire**shield	3 x 16mm **fire**shield	Stud	-/240/240	120/120/120	60	**55**
SSW580	4 x 16mm **fire**shield	4 x 16mm **fire**shield	Stud	-/240/240	180/180/180	66	**61**
SSW582	2 x 25mm **shaft**liner + 1 x 13mm **fire**shield	2 x 25mm **shaft**liner + 1 x 13mm **fire**shield	Stud	-/240/240	180/180/180	61	**56**
SSW514	1 x 16mm **fire**shield	1 x 16mm **fire**shield + 1 x 6mm Villaboard™	Stud	-/90/90	60/60/60	53	43
SSW516	1 x 16mm **fire**shield + 1 x 6mm Villaboard™	1 x 16mm **fire**shield + 1 x 6mm Villaboard™	Stud	-/120/120	60/60/60	56	48
SSW386	1 x 13mm **fire**shield	1 x 13mm **fire**shield	Acoustic stud	-/60/60	30/30/30	50	41
SSW387	1 x 13mm **fire**shield	2 x 13mm **fire**shield	Acoustic stud	-/90/90	30/30/30	56	47
SSW388	2 x 13mm **fire**shield	2 x 13mm **fire**shield	Acoustic stud	-/120/120	90/90/90	61	**52**
SSW396	1 x 13mm **fire**shield + 1 x 13mm **masta**shield	1 x 13mm **fire**shield + 1 x 13mm **masta**shield	Acoustic stud	-/90/90	60/60/60	58	**51**

1. Stud and Acoustic Stud acoustic values determined using 92mm cavity with glasswool insulation.

Fire Rated Internal Partition Walls

System	Side 1	Side 2	Frame[2]	FRL		Acoustics[1,2]	
						Rw	Rw+Ctr
SSW551	2 x 13mm fireshield	1 x 13mm fireshield + 1 x 6mm Villaboard™	Acoustic stud	-/90/90	30/30/30	60	**50**
SSW552	1 x 13mm fireshield + 1 x 6mm Villaboard™	1 x 13mm fireshield + 1 x 6mm Villaboard™	Acoustic stud	-/90/90	30/30/30	58	**50**
SSW391	1 x 16mm fireshield	1 x 16mm fireshield	Acoustic stud	-/90/90	60/60/60	51	43
SSW392	1 x 16mm fireshield	2 x 16mm fireshield	Acoustic stud	-/120/120	60/60/60	58	**50**
SSW393	2 x 16mm fireshield	2 x 16mm fireshield	Acoustic stud	-/120/120	120/120/120	62	**54**
SSW397	1 x 16mm fireshield + 1 x 10mm mastashield	1 x 16mm fireshield + 1 x 10mm mastashield	Acoustic stud	-/120/120	60/60/60	61	**51**
SSW555	2 x 16mm fireshield	1 x 16mm fireshield + 1 x 6mm Villaboard™	Acoustic stud	-/120/120	60/60/60	62	**53**
SSW556	1 x 16mm fireshield + 1 x 6mm Villaboard™	1 x 16mm fireshield + 1 x 6mm Villaboard™	Acoustic stud	-/120/120	60/60/60	61	**51**
SSW330	1 x 13mm fireshield	1 x 13mm fireshield	Double stud	-/60/60	30/30/30	50	38
SSW331	1 x 13mm fireshield	2 x 13mm fireshield	Double stud	-/90/90	30/30/30	60	**50**
SSW332	2 x 13mm fireshield	2 x 13mm fireshield	Double stud	-/120/120	90/90/90	63	**53**
SSW380	1 x 13mm fireshield + 1 x 13mm mastashield	1 x 13mm fireshield + 1 x 13mm mastashield	Double stud	-/90/90	60/60/60	64	**51**
SSW531	2 x 13mm fireshield	1 x 13mm fireshield + 1 x 6mm Villaboard™	Double stud	-/90/90	30/30/30	63	**50**
SSW532	1 x 13mm fireshield + 1 x 6mm Villaboard™	1 x 13mm fireshield + 1 x 6mm Villaboard™	Double stud	-/90/90	30/30/30	62	**50**
SSW335	1 x 16mm fireshield	1 x 16mm fireshield	Double stud	-/90/90	60/60/60	60	**50**
SSW336	1 x 16mm fireshield	2 x 16mm fireshield	Double stud	-/120/120	60/60/60	62	**51**
SSW337	2 x 16mm fireshield	2 x 16mm fireshield	Double stud	-/120/120	120/120/120	65	**55**
SSW339	3 x 16mm fireshield	3 x 16mm fireshield	Double stud	-/240/240	120/120/120	72	**61**
SSW581	4 x 16mm fireshield	4 x 16mm fireshield	Double stud	-/240/240	180/180/180	79	**71**
SSW583	2 x 25mm shaftliner + 1 x 13mm fireshield	2 x 25mm shaftliner + 1 x 13mm fireshield	Double stud	-/240/240	180/180/180	77	**70**
SSW381	1 x 16mm fireshield	1 x 16mm fireshield + 1 x 10mm mastashield	Double stud	-/90/90	60/60/60	60	**50**
SSW382	1 x 16mm fireshield + 1 x 10mm mastashield	1 x 16mm fireshield + 1 x 10mm mastashield	Double stud	-/120/120	60/60/60	64	**52**
SSW534	1 x 16mm fireshield	1 x 16mm fireshield + 1 x 6mm Villaboard™	Double stud	-/90/90	60/60/60	59	47
SSW535	2 x 16mm fireshield	1 x 16mm fireshield + 1 x 6mm Villaboard™	Double stud	-/120/120	60/60/60	65	**52**
SSW536	1 x 16mm fireshield + 1 x 6mm Villaboard™	1 x 16mm fireshield + 1 x 6mm Villaboard™	Double stud	-/120/120	60/60/60	64	**51**
SSW320	1 x 13mm fireshield	1 x 13mm fireshield	Staggered stud	-/60/60	30/30/30	47	36
SSW321	1 x 13mm fireshield	2 x 13mm fireshield	Staggered stud	-/90/90	30/30/30	51	43
SSW322	2 x 13mm fireshield	2 x 13mm fireshield	Staggered stud	-/120/120	90/90/90	58	**50**
SSW520	1 x 13mm fireshield	1 x 13mm fireshield + 1 x 6mm Villaboard™	Staggered stud	-/60/60	30/30/30	51	43
SSW522	1 x 13mm fireshield + 1 x 6mm Villaboard™	1 x 13mm fireshield + 1 x 6mm Villaboard™	Staggered stud	-/90/90	30/30/30	56	48
SSW325	1 x 16mm fireshield	1 x 16mm fireshield	Staggered stud	-/90/90	60/60/60	52	44
SSW326	1 x 16mm fireshield	2 x 16mm fireshield	Staggered stud	-/120/120	60/60/60	52	46
SSW327	2 x 16mm fireshield	2 x 16mm fireshield	Staggered stud	-/120/120	120/120/120	58	**52**
SSW524	1 x 16mm fireshield	1 x 16mm fireshield + 1 x 6mm Villaboard™	Staggered stud	-/90/90	60/60/60	52	45
SSW526	1 x 16mm fireshield + 1 x 6mm Villaboard™	1 x 16mm fireshield + 1 x 6mm Villaboard™	Staggered stud	-/120/120	60/60/60	59	**51**

1. Acoustic stud and Staggered stud acoustic values determined using 92mm cavity with Glasswool insulation.
2. Double stud acoustic values determined using 148mm cavity with Glasswool insulation.

SSW1

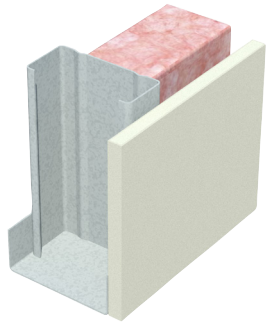

- 1 layer of 10mm **masta**shield or 10mm **water**shield
- Steel stud framing at maximum 600mm centres

Stud Size (mm)	Wall Width (mm)	**Sound Insulation** for studs at 600mm centres and thinnest BMT Rw (Rw + Ctr)		
		No insulation	Pink® Partition 50mm 11 kg/m³ R1.2	
51	61	25 (21)	29 (25)	Report INSUL v9
64	74			
76	86			
92	102			
150	160			

SSW10

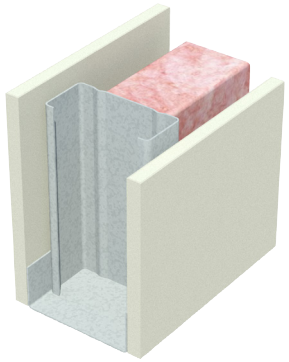

- 1 layer of 10mm **masta**shield or 10mm **water**shield
- Steel stud framing at maximum 600mm centres
- 1 layer of 10mm **masta**shield or 10mm **water**shield

Stud Size (mm)	Wall Width (mm)	**Sound Insulation** for studs at 600mm centres and thinnest BMT Rw (Rw + Ctr)		
		No insulation	Pink® Partition 50mm 11 kg/m³ R1.2	
51	71	33 (24)	37 (29)	Report Day Design 3094-33
64	84	33 (24)	39 (30)	
76	96	33 (24)	39 (30)	
92	112	33 (25)	40 (31)	
150	170	35 (25)	43 (33)	

SSW11

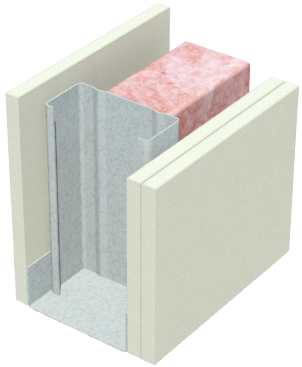

- 1 layer of 10mm **masta**shield or 10mm **water**shield
- Steel stud framing at maximum 600mm centres
- 2 layers of 10mm **masta**shield or 10mm **water**shield

Stud Size (mm)	Wall Width (mm)	**Sound Insulation** for studs at 600mm centres and thinnest BMT Rw (Rw + Ctr)		
		No insulation	Pink® Partition 50mm 11 kg/m³ R1.2	
51	81	37 (28)	42 (34)	Report Day Design 3094-33
64	94	38 (29)	43 (34)	
76	106	38 (29)	44 (35)	
92	122	38 (29)	45 (35)	
150	180	40 (29)	48 (38)	

SSW12

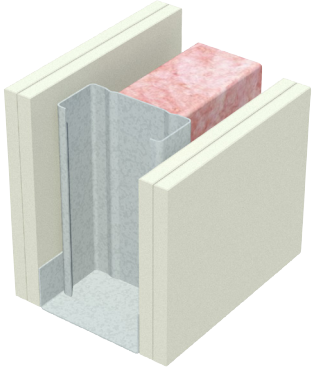

- 2 layers of 10mm **masta**shield or 10mm **water**shield
- Steel stud framing at maximum 600mm centres
- 2 layers of 10mm **masta**shield or 10mm **water**shield

Stud Size (mm)	Wall Width (mm)	**Sound Insulation** for studs at 600mm centres and thinnest BMT Rw (Rw + Ctr)		
		No insulation	Pink® Partition 50mm 11 kg/m³ R1.2	
51	91	40 (31)	47 (37)	Report Day Design 3094-33
64	104	41 (32)	48 (37)	
76	116	41 (32)	49 (39)	
92	132	42 (32)	50 (40)	
150	190	44 (36)	53 (44)	

SSW210

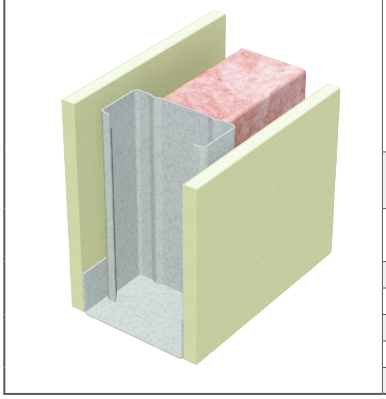

- 1 layer of 10mm **sound**shield or 10mm **opal**
- Steel stud framing at maximum 600mm centres
- 1 layer of 10mm **sound**shield or 10mm **opal**

Stud Size (mm)	**Wall Width** (mm)	**Sound Insulation** for studs at 600mm centres and thinnest BMT **Rw (Rw + Ctr)**		
		No insulation	Pink® Partition 50mm 11 kg/m³ R1.2	Reports
51	71	33 (26)	41 (33)	Day Design 3094-33
64	84	33 (26)[1]	42 (33)	
76	96	34 (26)	43 (34)	
92	112	35 (27)	43 (34)	[1]STR057
150	170	37 (27)	46 (36)	

SSW211

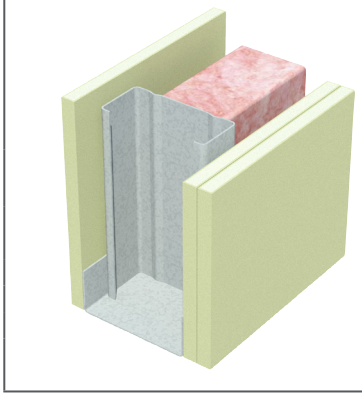

- 1 layer of 10mm **sound**shield or 10mm **opal**
- Steel stud framing at maximum 600mm centres
- 2 layers of 10mm **sound**shield or 10mm **opal**

Stud Size (mm)	**Wall Width** (mm)	**Sound Insulation** for studs at 600mm centres and thinnest BMT **Rw (Rw + Ctr)**		
		No insulation	Pink® Partition 50mm 11 kg/m³ R1.2	Report
51	81	39 (31)	46 (37)	Day Design 3094-33
64	94	39 (31)	46 (37)	
76	106	40 (31)	48 (37)	
92	122	40 (31)	49 (39)	
150	180	42 (32)	50 (42)	

SSW212

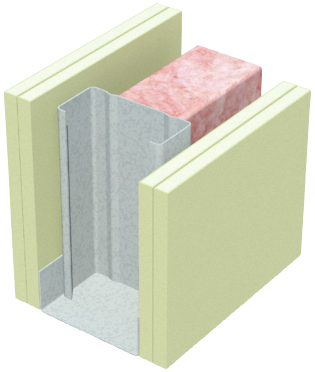

- 2 layers of 10mm **sound**shield or 10mm **opal**
- Steel stud framing at maximum 600mm centres
- 2 layers of 10mm **sound**shield or 10mm **opal**

Stud Size (mm)	**Wall Width** (mm)	**Sound Insulation** for studs at 600mm centres and thinnest BMT **Rw (Rw + Ctr)**		
		No insulation	Pink® Partition 50mm 11 kg/m³ R1.2	Report
51	91	43 (33)	50 (40)	Day Design 3094-33
64	104	43 (33)	51 (42)	
76	116	44 (34)	52 (43)	
92	132	45 (34)	53 (44)	
150	190	47 (39)	54 (47)	

SSW4

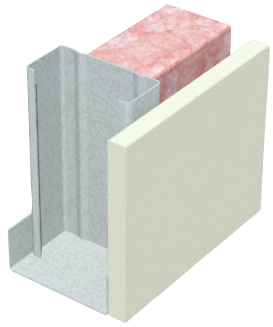

- 1 layer of 13mm **masta**shield or 13mm **water**shield
- Steel stud framing at maximum 600mm centres

Stud Size (mm)	Wall Width (mm)	**Sound Insulation** for studs at 600mm centres and thinnest BMT Rw (Rw + Ctr)		
		No insulation	Pink® Partition 50mm 11kg/m³ R1.2	
51	64	29 (25)	32 (28)	Report Day Design 3094-33
64	77			
76	89			
92	105			
150	163			

SSW15

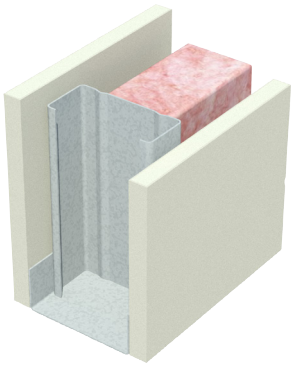

- 1 layer of 13mm **masta**shield or 13mm **water**shield
- Steel stud framing at maximum 600mm centres
- 1 layer of 13mm **masta**shield or 13mm **water**shield

Stud Size (mm)	Wall Width (mm)	**Sound Insulation** for studs at 600mm centres and thinnest BMT Rw (Rw + Ctr)		
		No insulation	Pink® Partition 50mm 11 kg/m³ R1.2	
51	77	33 (26)	41 (33)	Report Day Design 3094-33
64	90	34 (26)	42 (33)	
76	102	34 (26)	43 (33)	
92	118	35 (27)	43 (33)	
150	176	37 (27)	45 (37)	

SSW16

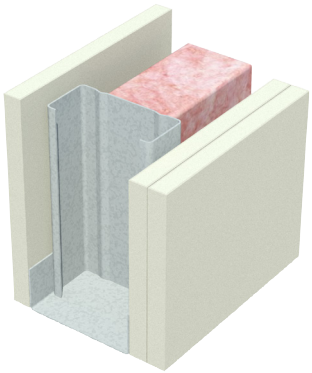

- 1 layer of 13mm **masta**shield or 13mm **water**shield
- Steel stud framing at maximum 600mm centres
- 2 layers of 13mm **masta**shield or 13mm **water**shield

Stud Size (mm)	Wall Width (mm)	**Sound Insulation** for studs at 600mm centres and thinnest BMT Rw (Rw + Ctr)		
		No insulation	Pink® Partition 50mm 11 kg/m³ R1.2	
51	90	39 (31)	46 (36)	Report Day Design 3094-33
64	103	39 (31)	47 (37)	
76	115	40 (31)	47 (37)	
92	131	40 (31)	49 (39)	
150	189	42 (32)	50 (42)	

SSW17

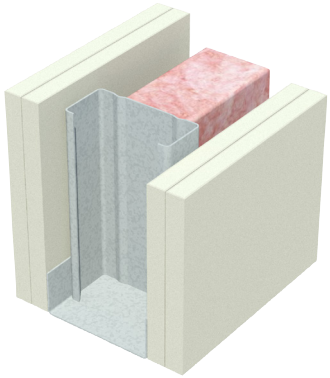

- 2 layers of 13mm **masta**shield or 13mm **water**shield
- Steel stud framing at maximum 600mm centres
- 2 layers of 13mm **masta**shield or 13mm **water**shield

Stud Size (mm)	Wall Width (mm)	**Sound Insulation** for studs at 600mm centres and thinnest BMT Rw (Rw + Ctr)		
		No insulation	Pink® Partition 50mm 11 kg/m³ R1.2	
51	103	42 (33)	50 (40)	Report Day Design 3094-33
64	116	43 (33)	51 (41)	
76	128	44 (34)	52 (43)	
92	144	44 (34)	53 (44)	
150	202	47 (39)	54 (47)	

SSW215

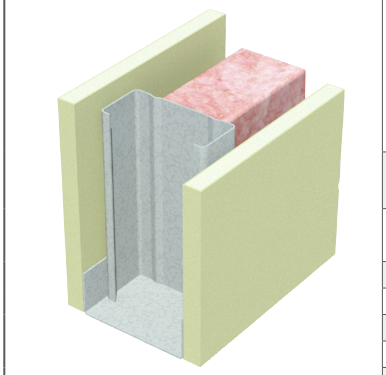

- 1 layer of 13mm **sound**shield
- Steel stud framing at maximum 600mm centres
- 1 layer of 13mm **sound**shield

Stud Size (mm)	**Wall Width** (mm)	**Sound Insulation** for studs at 600mm centres and thinnest BMT **Rw (Rw + Ctr)**		
		No insulation	Pink® Partition 50mm 11 kg/m³ R1.2	Report
51	77	36 (29)	45 (37)	Day Design 3094-33
64	90	37 (29)[1]	45 (37)	
76	102	37 (30)	46 (37)	
92	118	38 (30)	47 (39)	[1]TL442b
150	176	41 (31)	48 (42)	

SSW216

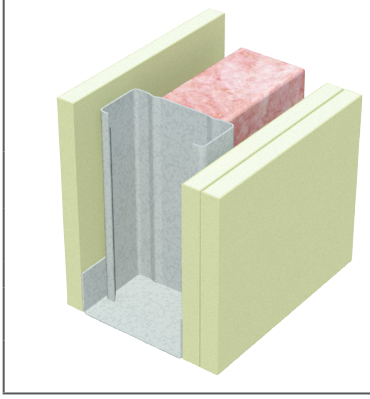

- 1 layer of 13mm **sound**shield
- Steel stud framing at maximum 600mm centres
- 2 layers of 13mm **sound**shield

Stud Size (mm)	**Wall Width** (mm)	**Sound Insulation** for studs at 600mm centres and thinnest BMT **Rw (Rw + Ctr)**		
		No insulation	Pink® Partition 50mm 11 kg/m³ R1.2	Report
51	90	42 (34)	50 (40)	Day Design 3094-33
64	103	43 (34)	51 (42)	
76	115	44 (34)	51 (43)	
92	131	45 (35)	52 (44)	
150	189	47 (37)	53 (47)	

SSW217

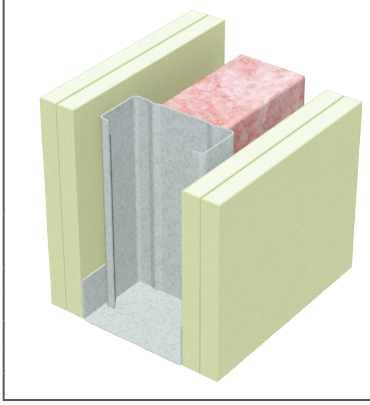

- 2 layers of 13mm **sound**shield
- Steel stud framing at maximum 600mm centres
- 2 layers of 13mm **sound**shield

Stud Size (mm)	**Wall Width** (mm)	**Sound Insulation** for studs at 600mm centres and thinnest BMT **Rw (Rw + Ctr)**		
		No insulation	Pink® Partition 50mm 11 kg/m³ R1.2	Report
51	103	46 (40)	54 (46)	Day Design 3094-33
64	116	47 (41)	55 (47)	
76	128	48 (41)	55 (48)	
92	144	49 (42)	55 (49)	
150	202	51 (44)	56 (52)	

SSW276

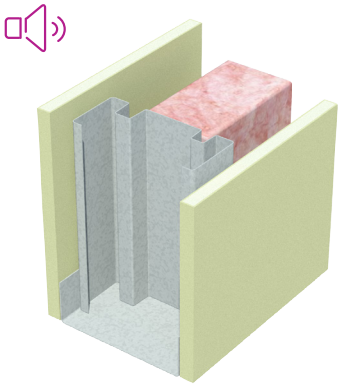

- 1 layer of 10mm **sound**shield or 10mm **opal**
- 92mm **acoustic** stud at maximum 600mm centres
- 1 layer of 10mm **sound**shield or 10mm **opal**

Stud Size (mm)	**Wall Width** (mm)	**Sound Insulation** for studs at 600mm centres and thinnest BMT Rw (Rw + Ctr)		
		No insulation	Pink® Partition 75mm 11 kg/m³ R1.8	
92 Siniat Acoustic Stud	112	41 (34)	47 (38)	Report Day Design 5008.28

SSW277

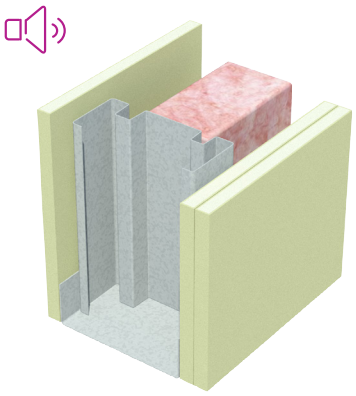

- 1 layer of 10mm **sound**shield or 10mm **opal**
- 92mm **acoustic** stud at maximum 600mm centres
- 2 layers of 10mm **sound**shield or 10mm **opal**

Stud Size (mm)	**Wall Width** (mm)	**Sound Insulation** for studs at 600mm centres and thinnest BMT Rw (Rw + Ctr)		
		No insulation	Pink® Partition 75mm 11 kg/m³ R1.8	
92 Siniat Acoustic Stud	122	43 (36)	50 (42)	Report Day Design 5008.28

SSW278

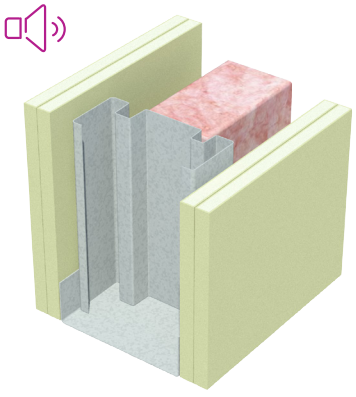

- 2 layers of 10mm **sound**shield or 10mm **opal**
- 92mm **acoustic** stud at maximum 600mm centres
- 2 layers of 10mm **sound**shield or 10mm **opal**

Stud Size (mm)	**Wall Width** (mm)	**Sound Insulation** for studs at 600mm centres and thinnest BMT Rw (Rw + Ctr)		
		No insulation	Pink® Partition 75mm 11 kg/m³ R1.8	
92 Siniat Acoustic Stud	132	49 (43)	57 (48)	Report Day Design 5008.28

SSW85

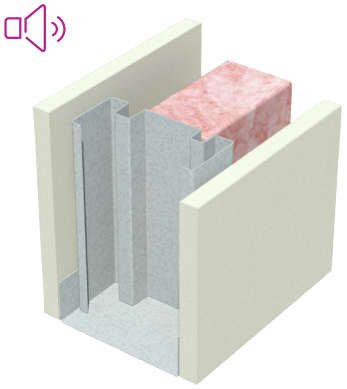

- 1 layer of 13mm **masta**shield or 13mm **water**shield
- 92mm **acoustic** stud at maximum 600mm centres
- 1 layer of 13mm **masta**shield or 13mm **water**shield

Stud Size (mm)	**Wall Width** (mm)	**Sound Insulation** for studs at 600mm centres and thinnest BMT **Rw (Rw + Ctr)**		
		No insulation	Pink® Partition 75mm 11 kg/m³ R1.8	
92 Siniat Acoustic Stud	118	39 (33)	46 (37)	Report Day Design 5008.28

SSW86

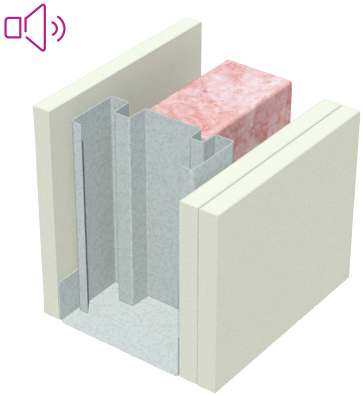

- 1 layer of 13mm **masta**shield or 13mm **water**shield
- 92mm **acoustic** stud at maximum 600mm centres
- 2 layers of 13mm **masta**shield or 13mm **water**shield

Stud Size (mm)	**Wall Width** (mm)	**Sound Insulation** for studs at 600mm centres and thinnest BMT **Rw (Rw + Ctr)**		
		No insulation	Pink® Partition 75mm 11 kg/m³ R1.8	
92 Siniat Acoustic Stud	131	43 (36)	50 (41)	Report Day Design 5008.28

SSW87

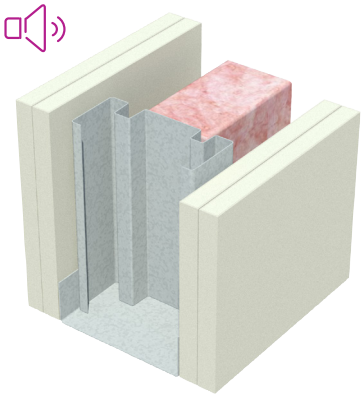

- 2 layers of 13mm **masta**shield or 13mm **water**shield
- 92mm **acoustic** stud at maximum 600mm centres
- 2 layers of 13mm **masta**shield or 13mm **water**shield

Stud Size (mm)	**Wall Width** (mm)	**Sound Insulation** for studs at 600mm centres and thinnest BMT **Rw (Rw + Ctr)**		
		No insulation	Pink® Partition 75mm 11 kg/m³ R1.8	
92 Siniat Acoustic Stud	144	49 (43)	56 (48)	Report Day Design 5008.28

SSW281

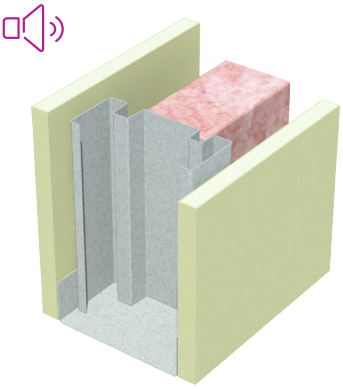

- 1 layer of 13mm **sound**shield
- 92mm **acoustic** stud at maximum 600mm centres
- 1 layer of 13mm **sound**shield

Stud Size (mm)	**Wall Width** (mm)	**Sound Insulation** for studs at 600mm centres and thinnest BMT Rw (Rw + Ctr)		
		No insulation	Pink® Partition 75mm 11 kg/m³ R1.8	
92 Siniat Acoustic Stud	118	42 (36)	50 (42)	Report Day Design 5008.28

SSW282

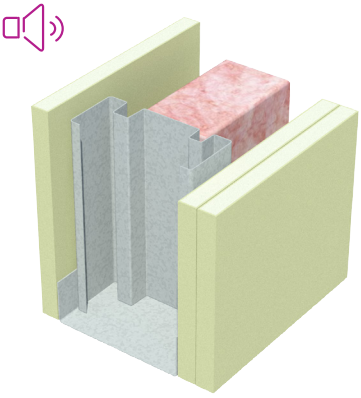

- 1 layer of 13mm **sound**shield
- 92mm **acoustic** stud at maximum 600mm centres
- 2 layers of 13mm **sound**shield

Stud Size (mm)	**Wall Width** (mm)	**Sound Insulation** for studs at 600mm centres and thinnest BMT Rw (Rw + Ctr)		
		No insulation	Pink® Partition 75mm 11 kg/m³ R1.8	
92 Siniat Acoustic Stud	131	48 (43)	57 (49)	Report Day Design 5008.28

SSW283

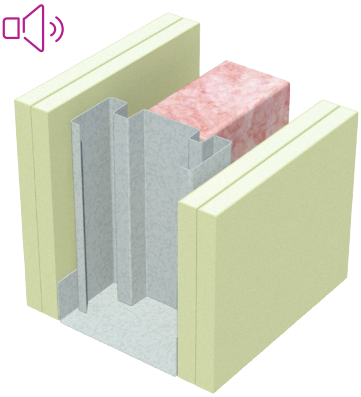

- 2 layers of 13mm **sound**shield
- 92mm **acoustic** stud at maximum 600mm centres
- 2 layers of 13mm **sound**shield

Stud Size (mm)	**Wall Width** (mm)	**Sound Insulation** for studs at 600mm centres and thinnest BMT Rw (Rw + Ctr)		
		No insulation	Pink® Partition 75mm 11 kg/m³ R1.8	
92 Siniat Acoustic Stud	144	54 (50)	62 (54)	Report Day Design 5008.28

SSW20

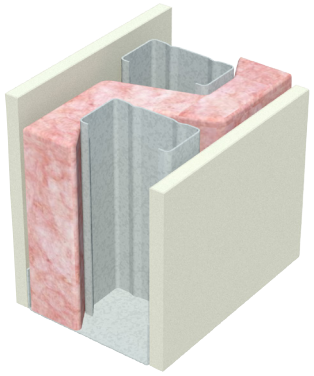

- 1 layer of 10mm **masta**shield or 10mm **water**shield
- Staggered steel studs at maximum 600mm centres (300mm staggered)
- 1 layer of 10mm **masta**shield or 10mm **water**shield

Track Width (mm)	Wall Width (mm)	Sound Insulation Rw (Rw + Ctr)			
		No insulation	Pink® Partition 50mm 11kg/m³ R1.2	Pink® Partition 75mm 14kg/m³ R1.9	Report
92	112	33 (36)	42 (31)	43 (32)	Day Design 3094-33
150	170	34 (26)	44 (32)	45 (33)	Note: Impact sound Resistant

SSW21

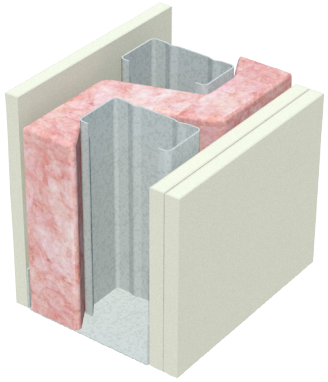

- 1 layer of 10mm **masta**shield or 10mm **water**shield
- Staggered steel studs at maximum 600mm centres (300mm staggered)
- 2 layers of 10mm **masta**shield or 10mm **water**shield

Track Width (mm)	Wall Width (mm)	Sound Insulation Rw (Rw + Ctr)			
		No insulation	Pink® Partition 50mm 11kg/m³ R1.2	Pink® Partition 75mm 14kg/m³ R1.9	Report
92	122	37 (29)	47 (35)	48 (36)	Day Design 3094-33
150	180	38 (29)	49 (38)	50 (39)	Note: Impact sound Resistant

SSW22

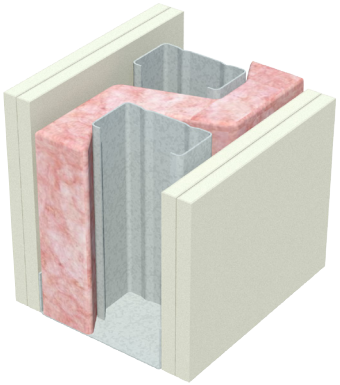

- 2 layers of 10mm **masta**shield or 10mm **water**shield
- Staggered steel studs at maximum 600mm centres (300mm staggered)
- 2 layers of 10mm **masta**shield or 10mm **water**shield

Track Width (mm)	Wall Width (mm)	Sound Insulation Rw (Rw + Ctr)			
		No insulation	Pink® Partition 50mm 11kg/m³ R1.2	Pink® Partition 75mm 14kg/m³ R1.9	Report
92	132	42 (33)	52 (42)	52 (43)	Day Design 3094-33
150	190	44 (34)	53 (45)	54 (46)	Note: Impact sound Resistant

SSW220

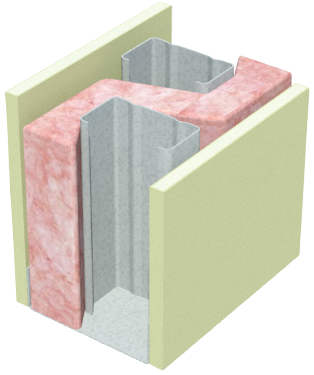

- 1 layer of 10mm **sound**shield or 10mm **opal**
- Staggered steel studs at maximum 600mm centres (300mm staggered)
- 1 layer of 10mm **sound**shield or 10mm **opal**

Track Width (mm)	Wall Width (mm)	Sound Insulation Rw (Rw + Ctr)			
		No insulation	Pink® Partition 50mm 11kg/m³ R1.2	Pink® Partition 75mm 14kg/m³ R1.9	Report
92	112	35 (28)	45 (33)[1]	45 (34)	Day Design 3094-33 [1]TL442g
150	170	37 (28)	46 (36)	47 (37)	Note: Impact sound Resistant

SSW221

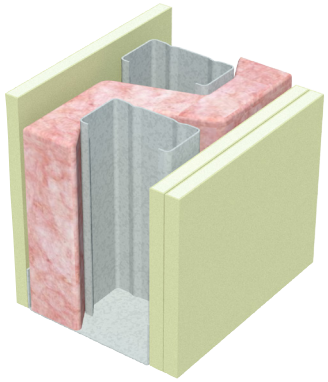

- 1 layer of 10mm **sound**shield or 10mm **opal**
- Staggered steel studs at maximum 600mm centres (300mm staggered)
- 2 layers of 10mm **sound**shield or 10mm **opal**

Track Width (mm)	Wall Width (mm)	Sound Insulation Rw (Rw + Ctr)			
		No insulation	Pink® Partition 50mm 11kg/m³ R1.2	Pink® Partition 75mm 14kg/m³ R1.9	Report
92	122	40 (32)	50 (40)	50 (41)	Day Design 3094-33
150	180	42 (33)	51 (44)	52 (45)	Note: Impact sound Resistant

SSW222

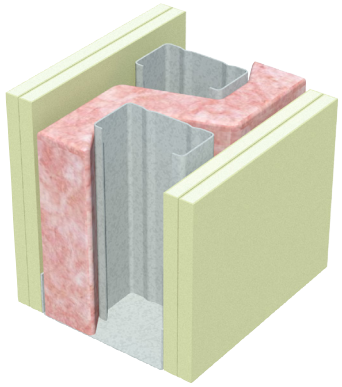

- 2 layers of 10mm **sound**shield or 10mm **opal**
- Staggered steel studs at maximum 600mm centres (300mm staggered)
- 2 layers of 10mm **sound**shield or 10mm **opal**

Track Width (mm)	Wall Width (mm)	Sound Insulation Rw (Rw + Ctr)			
		No insulation	Pink® Partition 50mm 11kg/m³ R1.2	Pink® Partition 75mm 14kg/m³ R1.9	Report
92	132	44 (35)	54 (46)	55 (47)	Day Design 3094-33
150	190	47 (37)	55 (49)	56 (50)	Note: Impact sound Resistant

SSW25

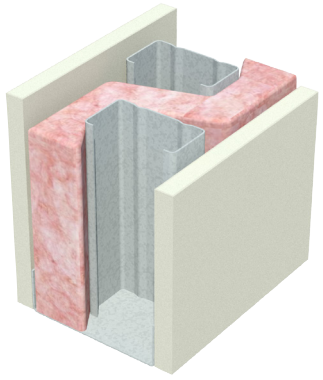

- 1 layer of 13mm **masta**shield or 13mm **water**shield
- Staggered steel studs at maximum 600mm centres (300mm staggered)
- 1 layer of 13mm **masta**shield or 13mm **water**shield

Track Width (mm)	Wall Width (mm)	Sound Insulation Rw (Rw + Ctr)			
		No insulation	Pink® Partition 50mm 11kg/m³ R1.2	Pink® Partition 75mm 14kg/m³ R1.9	Report
92	118	35 (27)	45 (33)	45 (34)	Day Design 3094-33
150	176	36 (28)	46 (36)	47 (37)	Note: Impact sound Resistant

SSW26

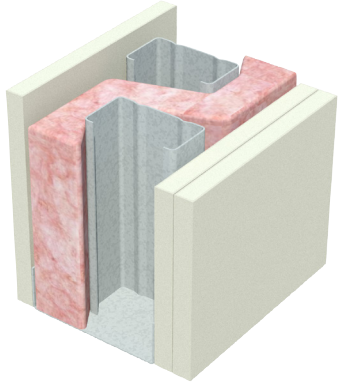

- 1 layer of 13mm **masta**shield or 13mm **water**shield
- Staggered steel studs at maximum 600mm centres (300mm staggered)
- 2 layers of 13mm **masta**shield or 13mm **water**shield

Track Width (mm)	Wall Width (mm)	Sound Insulation Rw (Rw + Ctr)			
		No insulation	Pink® Partition 50mm 11kg/m³ R1.2	Pink® Partition 75mm 14kg/m³ R1.9	Report
92	131	40 (32)	50 (40)	50 (41)	Day Design 3094-33
150	189	42 (33)	51 (44)	52 (45)	Note: Impact sound Resistant

SSW27

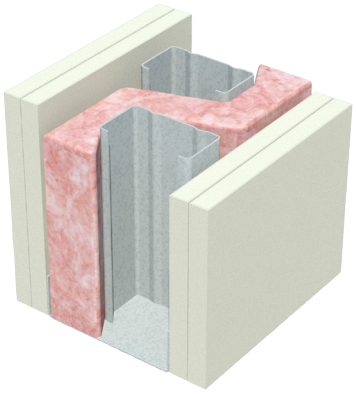

- 2 layers of 13mm **masta**shield or 13mm **water**shield
- Staggered steel studs at maximum 600mm centres (300mm staggered)
- 2 layers of 13mm **masta**shield or 13mm **water**shield

Track Width (mm)	Wall Width (mm)	Sound Insulation Rw (Rw + Ctr)			
		No insulation	Pink® Partition 50mm 11kg/m³ R1.2	Pink® Partition 75mm 14kg/m³ R1.9	Report
92	144	44 (35)	54 (46)	54 (47)	Day Design 3094-33
150	202	47 (37)	55 (49)	56 (49)	Note: Impact sound Resistant

SSW225

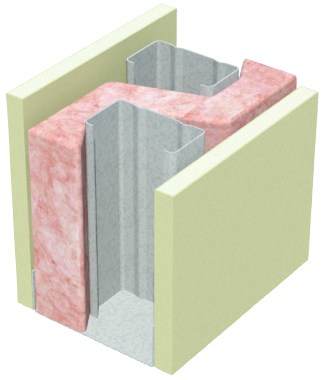

- 1 layer of 13mm **sound**shield
- Staggered steel studs at maximum 600mm centres (300mm staggered)
- 1 layer of 13mm **sound**shield

Track Width (mm)	Width (mm)	Sound Insulation Rw (Rw + Ctr)			
		No insulation	Pink® Partition 50mm 11kg/m³ R1.2	Pink® Partition 75mm 14kg/m³ R1.9	Report
92	118	40 (32)	48 (40)	49 (41)	Day Design 3094-33 [1]TL442C
150	176	42 (33)	49 (43)	51 (46)[1]	Note: Impact sound Resistant

SSW226

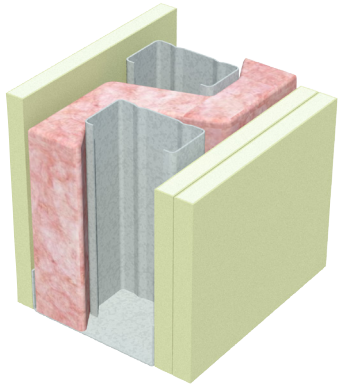

- 1 layer of 13mm **sound**shield
- Staggered steel studs at maximum 600mm centres (300mm staggered)
- 2 layers of 13mm **sound**shield

Track Width (mm)	Wall Width (mm)	Sound Insulation Rw (Rw + Ctr)			
		No insulation	Pink® Partition 50mm 11kg/m³ R1.2	Pink® Partition 75mm 14kg/m³ R1.9	Report
92	131	44 (36)	52 (46)	53 (47)	Day Design 3094-33
150	189	46 (37)	53 (48)	54 (49)	Note: Impact sound Resistant

SSW227

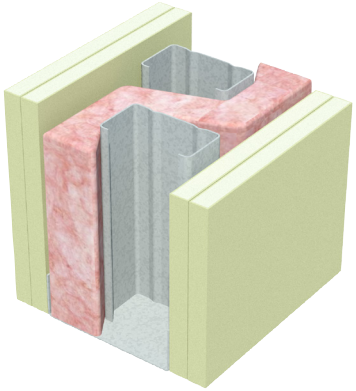

- 2 layers of 13mm **sound**shield
- Staggered steel studs at maximum 600mm centres (300mm staggered)
- 2 layers of 13mm **sound**shield

Track Width (mm)	Wall Width (mm)	Sound Insulation Rw (Rw + Ctr)			
		No insulation	Pink® Partition 50mm 11kg/m³ R1.2	Pink® Partition 75mm 14kg/m³ R1.9	Report
92	144	49 (42)	58 (51)	59 (52)	Day Design 3094-33 [1]TL442d
150	202	51 (43)	59 (53)[1]	60 (54)	Note: Impact sound Resistant

SSW300

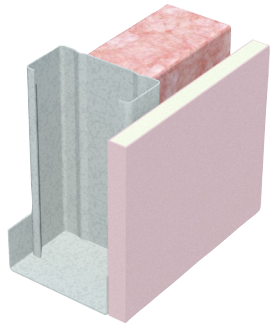

- 1 layer of 13mm **fire**shield
- Steel stud framing at maximum 600mm centres

fireshield can be substituted with **multi**shield or **tru**rock

Stud Size (mm)	Wall Width (mm)	**Sound Insulation** for studs at 600mm centres and thinnest BMT Rw (Rw + Ctr)		
		No insulation	Pink® Partition 50mm 11 kg/m³ R1.2	
51	64	30 (26)	33 (29)	Report Day Design 3094-35
64	77			
76	89			
92	105			
150	163			

SSW301

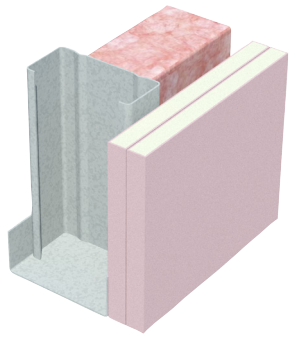

- 2 layers of 13mm **fire**shield
- Steel stud framing at maximum 600mm centres

fireshield can be substituted with **multi**shield or **tru**rock

Fire Resistance Level

-/30/30 and **30/30/30**
rated from the lined side only

Report
FC13921

Stud Size (mm)	Wall Width (mm)	**Sound Insulation** for studs at 600mm centres and thinnest BMT Rw (Rw + Ctr)		
		No insulation	Pink® Partition 50mm 11 kg/m³ R1.2	
51	77	34 (30) [1]	39 (35)	Reports Day Design 3094-33 [1]ATF 1530 INSUL v9
64	90			
76	102			
92	118			
150	176			

SSW302

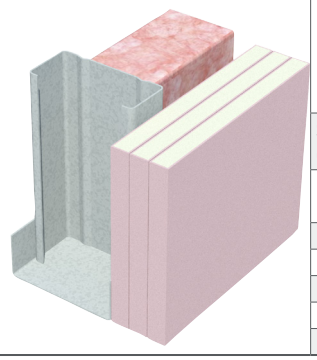

- 3 layers of 13mm **fire**shield
- Steel stud framing at maximum 600mm centres

fireshield can be substituted with **multi**shield or **tru**rock

Fire Resistance Level

-/90/90 and **90/90/90**
rated from the lined side only

Report
FC13921

Stud Size (mm)	Wall Width (mm)	**Sound Insulation** for studs at 600mm centres and thinnest BMT Rw (Rw + Ctr)		
		No insulation	Pink® Partition 50mm 11 kg/m³ R1.2	
51	90	37 (24)	42 (39)	Reports Day Design 3094-33 INSUL v9
64	103			
76	115			
92	131			
150	189			

SSW310

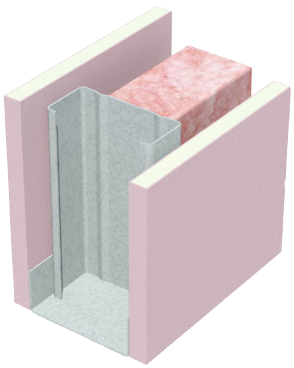

- 1 layer of 13mm **fire**shield
- Steel stud framing at maximum 600mm centres
- 1 layer of 13mm **fire**shield

fireshield can be substituted with **multi**shield or **tru**rock

Fire Resistance Level

-/60/60 and **30/30/30**
rated from both sides

Report
FC13921

Stud Size (mm)	Wall Width (mm)	**Sound Insulation** for studs at 600mm centres and thinnest BMT Rw (Rw + Ctr)		
		No insulation	Pink® Partition 50mm 11kg/m³ R1.2	
51	77	36 (28)	43 (34)	Reports Day Design 3094-33 [1]STR082 [2]TL561-07 Use Pink® Partition 50mm 32 kg/m³ R1.5 to achieve 45 (36)
64	90	36 (28)[1]	44 (34)[2]	
76	102	37 (28)	45 (35)	
92	118	38 (29)	46 (36)	
150	176	39 (29)	47 (40)	

SSW311

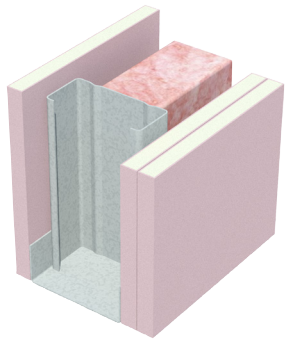

- 1 layer of 13mm **fire**shield
- Steel stud framing at maximum 600mm centres
- 2 layers of 13mm **fire**shield

fireshield can be substituted with **multi**shield or **tru**rock

Fire Resistance Level

-/90/90 and **30/30/30** rated from both sides

Report FC13921

Stud Size (mm)	**Wall Width (mm)**	**Sound Insulation** for studs at 600mm centres and thinnest BMT **Rw (Rw + Ctr)**			
		No insulation	Pink® Partition 50mm 11kg/m³ R1.2	Pink® Partition 75mm 11 kg/m³ R1.8	Reports
51	90	41 (33)	48 (39)	-	Day Design 3094-33
64	103	42 (33)	49 (39)	-	
76	115	42 (33)	50 (40)	-	
92	131	43 (33)	50 (42)	50 (43)[1]	[1]TL561-05
150	189	45 (35)	52 (45)	-	

SSW312

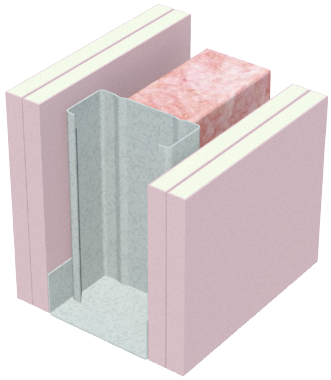

- 2 layers of 13mm **fire**shield
- Steel stud framing at maximum 600mm centres
- 2 layers of 13mm **fire**shield

fireshield can be substituted with **multi**shield or **tru**rock

Fire Resistance Level

-/120/120 and **90/90/90** rated from both sides

Report FC13921

Stud Size (mm)	**Wall Width (mm)**	**Sound Insulation** for studs at 600mm centres and thinnest BMT **Rw (Rw + Ctr)**		
		No insulation	Pink® Partition 50mm 11kg/m³ R1.2	Reports
51	103	46 (39)	52 (43)	Day Design 3094-33
64	116	47 (40)	53 (45)	
76	128	47 (40)	54 (46)	
92	144	49 (42)[1]	55 (47)	[1]HAS 087
150	202	51 (42)	55 (**50**)	

SSW314

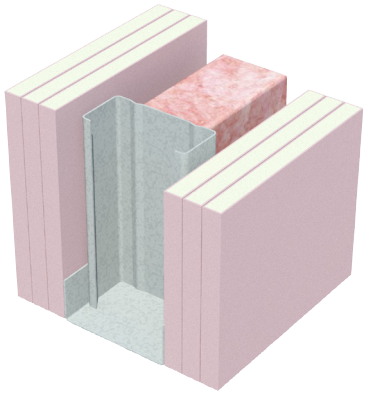

- 3 layers of 13mm **fire**shield
- Steel stud framing at maximum 600mm centres
- 3 layers of 13mm **fire**shield

fireshield can be substituted with **multi**shield or **tru**rock

Fire Resistance Level

-/180/180 and **120/120/120** rated from both sides

Report FC13921

Stud Size (mm)	**Wall Width (mm)**	**Sound Insulation** for studs at 600mm centres and thinnest BMT **Rw (Rw + Ctr)**		
		No insulation	Pink® Partition 50mm 11kg/m³ R1.2	Report
51	129	50 (43)	58 (**50**)	Day Design 3094-33
64	142	51 (43)	58 (**51**)	
76	154	52 (44)	59 (**52**)	
92	170	53 (45)	59 (**53**)	
150	228	56 (48)	60 (**55**)	

SSW910

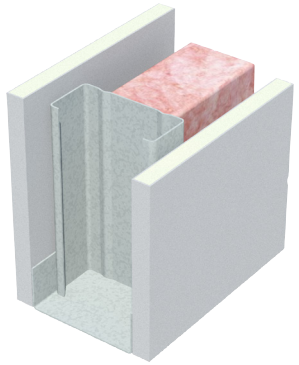

- 1 layer of 13mm **tru**rock
- Steel stud framing at maximum 600mm centres
- 1 layer of 13mm **tru**rock

Fire Resistance Level

-/60/60 and **30/30/30** rated from both sides

Report FC13921

Stud Size (mm)	**Wall Width (mm)**	**Sound Insulation** for studs at 600mm centres and thinnest BMT **Rw (Rw + Ctr)**		
		No insulation	Pink® Partition 50mm 11kg/m³ R1.2	Reports
51	77	36 (29)	45 (37)	Day Design 5008-09 3094-33
64	90	37 (30)	46 (37)	
76	102	38 (30)	47 (38)	
92	118	38 (30)	47 (39)	
150	176	40 (31)	49 (42)	

SSW911

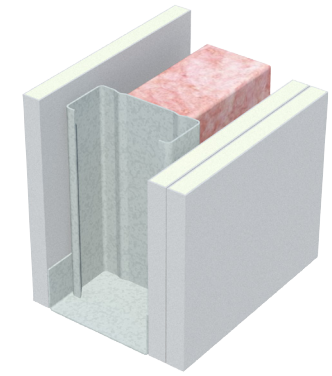

- 1 layer of 13mm **tru**rock
- Steel stud framing at maximum 600mm centres
- 2 layers of 13mm **tru**rock

Fire Resistance Level

-/90/90 and **60/60/60** rated from both sides

Report FC13921

Stud Size (mm)	Wall Width (mm)	**Sound Insulation** for studs at 600mm centres and thinnest BMT Rw (Rw + Ctr)		
		No insulation	Pink® Partition 50mm 11kg/m³ R1.2	Reports
51	90	43 (34)	50 (41)	Day Design 5008-09 3094-33
64	103	43 (34)	51 (42)	
76	115	44 (35)	51 (44)	
92	131	45 (35)	52 (45)	
150	189	47 (37)	53 (48)	

SSW912

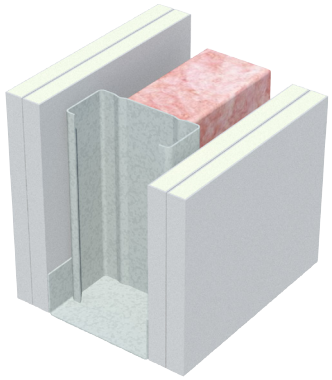

- 2 layers of 13mm **tru**rock
- Steel stud framing at maximum 600mm centres
- 2 layers of 13mm **tru**rock

Fire Resistance Level

-/120/120 and **90/90/90** rated from both sides

Report FC13921

Stud Size (mm)	Wall Width (mm)	**Sound Insulation** for studs at 600mm centres and thinnest BMT Rw (Rw + Ctr)		
		No insulation	Pink® Partition 50mm 11kg/m³ R1.2	Reports
51	103	47 (40)	54 (46)	Day Design 5008-09 3094-33
64	116	48 (41)	55 (48)	
76	128	49 (41)	55 (49)	
92	144	49 (42)	56 (**50**)	
150	202	52 (44)	56 (**52**)	

SSW510

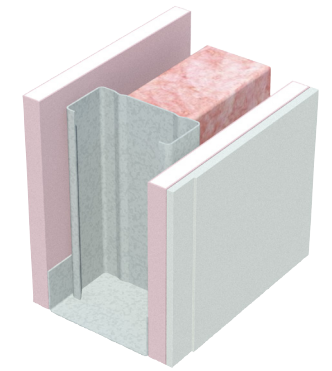

- 1 layer of 13mm **fire**shield
- Steel stud framing at maximum 600mm centres
- 1 layer of 13mm **fire**shield + 6mm Villaboard™

fireshield can be substituted with **multi**shield or **tru**rock

Fire Resistance Level

-/60/60 and **30/30/30** rated from both sides

Report FC13921

Stud Size (mm)	Wall Width (mm)	**Sound Insulation** for studs at 600mm centres and thinnest BMT Rw (Rw + Ctr)		
		No insulation	Pink® Partition 50mm 11kg/m³ R1.2	Reports
51	83	42 (32)	48 (39)	Day Design 3094-33
64	96	42 (32)	49 (39)	
76	108	42 (32)	50 (40)	
92	124	43 (33)	51 (42)	
150	182	45 (34)	52 (45)	

SSW512

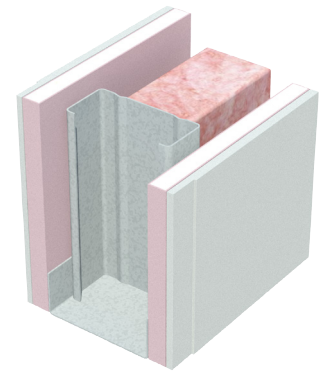

- 1 layer of 13mm **fire**shield + 6mm Villaboard™
- Steel stud framing at maximum 600mm centres
- 1 layer of 13mm **fire**shield + 6mm Villaboard™

fireshield can be substituted with **multi**shield or **tru**rock

Fire Resistance Level

-/90/90 and **30/30/30** rated from both sides

Report FC13921

Stud Size (mm)	Wall Width (mm)	**Sound Insulation** for studs at 600mm centres and thinnest BMT Rw (Rw + Ctr)		
		No insulation	Pink® Partition 50mm 11kg/m³ R1.2	Reports
51	89	45 (35)	53 (42)	Day Design 3094-33
64	102	46 (35)	54 (44)	
76	114	46 (36)	55 (46)	
92	130	47 (36)	55 (47)	
150	188	49 (41)	56 (**50**)	

SSW303

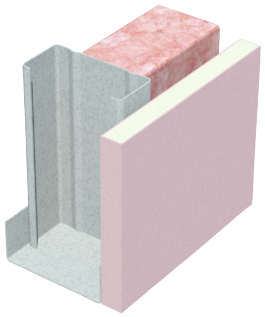

- 1 layer of 16mm **fire**shield
- Steel stud framing at maximum 600mm centres

fireshield can be substituted with **multi**shield or **tru**rock

Stud Size (mm)	Wall Width (mm)	**Sound Insulation** for studs at 600mm centres and thinnest BMT **Rw (Rw + Ctr)**		
		No insulation	Pink® Partition 50mm 11kg/m³ R1.2	Report
51	67	30 (27)	33 (30)	Day Design 3094-35 INSUL v9
64	80			
76	92			
92	108			
150	166			

SSW304

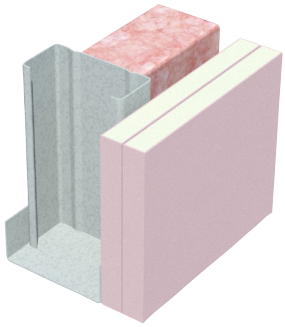

- 2 layers of 16mm **fire**shield
- Steel stud framing at maximum 600mm centres

fireshield can be substituted with **multi**shield or **tru**rock

Fire Resistance Level

-/60/60 and **60/60/60** rated from the lined side only

Report FC13921

Stud Size (mm)	Wall Width (mm)	**Sound Insulation** for studs at 600mm centres and thinnest BMT **Rw (Rw + Ctr)**		
		No insulation	Pink® Partition 50mm 11kg/m³ R1.2	Report
51	83	35 (31)	40 (37)	Day Design 3094-33 INSUL v9
64	96			
76	108			
92	124			
150	182			

SSW305

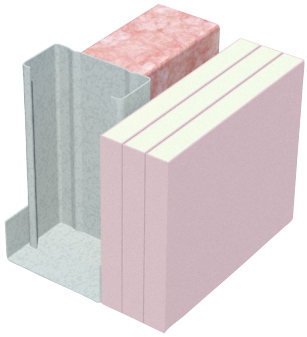

- 3 layers of 16mm **fire**shield
- Steel stud framing at maximum 600mm centres

fireshield can be substituted with **multi**shield or **tru**rock

Fire Resistance Level

-/120/120 and **120/120/120** rated from the lined side only

Report FC13921

Stud Size (mm)	Wall Width (mm)	**Sound Insulation** for studs at 600mm centres and thinnest BMT **Rw (Rw + Ctr)**		
		No insulation	Pink® Partition 50mm 11kg/m³ R1.2	Report
51	99	38 (35)	43 (40)	Day Design 3094-33 INSUL v9
64	112			
76	124			
92	140			
150	198			

SSW315

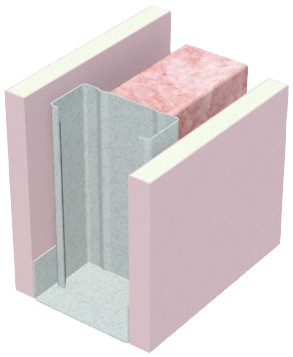

- 1 layer of 16mm **fire**shield
- Steel stud framing at maximum 600mm centres
- 1 layer of 16mm **fire**shield

fireshield can be substituted with **multi**shield or **tru**rock

Fire Resistance Level

-/90/90 and **60/60/60** rated from both sides using Glasswool insulation

-/60/60 and **60/60/60** rated from both sides using either polyester insulation or no insulation

Report FC13921

Stud Size (mm)	Wall Width (mm)	**Sound Insulation** for studs at 600mm centres and thinnest BMT **Rw (Rw + Ctr)**		
		No insulation	Pink® Partition 50mm 11kg/m³ R1.2	Reports Day Design 3094-33
51	83	36 (29)	45 (37)	
64	96	37 (29)[1]	46 (37)	
76	108	38 (30)	47 (38)	
92	124	38 (30)	47 (39)	[1]HAS 086
150	182	40 (31)	49 (42)	

SSW316

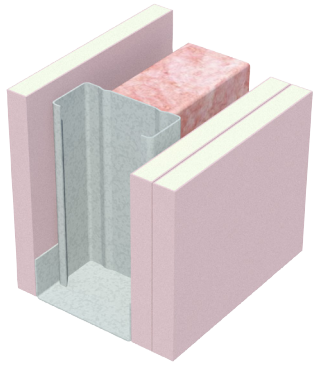

- 1 layer of 16mm **fire**shield
- Steel stud framing at maximum 600mm centres
- 2 layers of 16mm **fire**shield

fireshield can be substituted with **multi**shield or **tru**rock

Fire Resistance Level

-/120/120 and **60/60/60** rated from both sides

Report FC13921

Stud Size (mm)	Wall Width (mm)	**Sound Insulation** for studs at 600mm centres and thinnest BMT Rw (Rw + Ctr)	
		No insulation	Pink® Partition 50mm 11kg/m³ R1.2
51	99	43 (34)	50 (41)
64	112	43 (34)	51 (42)
76	124	44 (35)	51 (44)
92	140	45 (35)	52 (45)
150	198	47 (37)	53 (48)

Report

Day Design 3094-33

SSW317

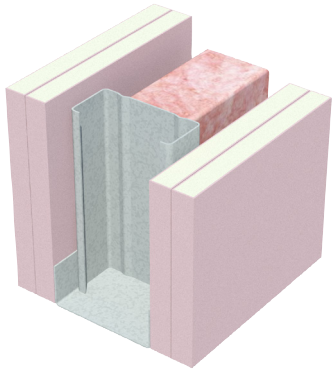

- 2 layers of 16mm **fire**shield
- Steel stud framing at maximum 600mm centres
- 2 layers of 16mm **fire**shield

fireshield can be substituted with **multi**shield or **tru**rock

Fire Resistance Level

-/120/120 and **120/120/120** rated from both sides

Report FC13921

Stud Size (mm)	Wall Width (mm)	**Sound Insulation** for studs at 600mm centres and thinnest BMT Rw (Rw + Ctr)	
		No insulation	Pink® Partition 50mm 11kg/m³ R1.2
51	115	47 (40)	54 (46)
64	128	48 (41)	55 (48)
76	140	49 (41)	55 (49)
92	156	49 (42)[1]	56 (**50**)
150	214	52 (44)	56 (**52**)

Report

Day Design 3094-33

[1]HAS087

SSW319

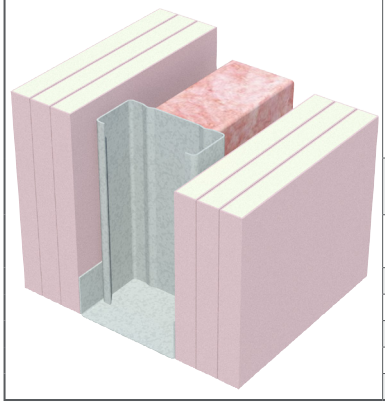

- 3 layers of 16mm **fire**shield
- Steel stud framing at maximum 600mm centres
- 3 layers of 16mm **fire**shield

fireshield can be substituted with **multi**shield or **tru**rock

Fire Resistance Level

-/240/240 and **120/120/120** rated from both sides

Report FC13921

Stud Size (mm)	Wall Width (mm)	**Sound Insulation** for studs at 600mm centres and thinnest BMT Rw (Rw + Ctr)	
		No insulation	Pink® Partition 50mm 11kg/m³ R1.2
51	147	53 (46)	59 (**52**)
64	160	54 (47)	59 (**54**)
76	172	55 (47)	60 (**54**)
92	188	56 (48)	60 (**55**)
150	246	59 (**50**)	60 (**56**)

Reports

Day Design 3094-33

SSW580

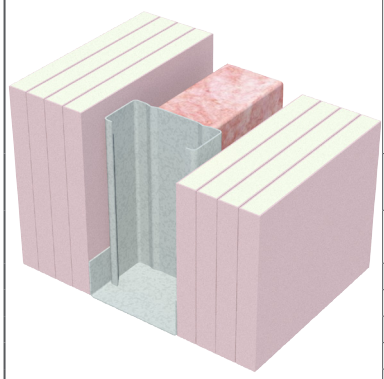

- 4 layers of 16mm **fire**shield
- Steel stud framing at maximum 600mm centres
- 4 layers of 16mm **fire**shield

fireshield can be substituted with **multi**shield or **tru**rock

Fire Resistance Level

-/240/240 and **180/180/180** rated from both sides

Report FC13921

Stud Size (mm)	Wall Width (mm)	**Sound Insulation** for studs at 600mm centres and thinnest BMT Rw (Rw + Ctr)	
		No insulation	Pink® Partition 50mm 11kg/m³ R1.2
51	179	61 (**53**)	65 (**58**)
64	192	62 (**54**)	66 (**59**)
76	204	62 (**55**)	66 (**60**)
92	220	63 (**56**)	66 (**61**)
150	278	64 (**58**)	67 (**62**)

Reports

INSUL v9

SSW582

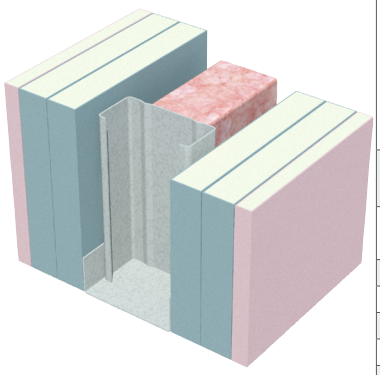

- 2 layers of 25mm **shaft**liner + 1 layer of 13mm **fire**shield
- Steel stud framing at maximum 600mm centres
- 2 layers of 25mm **shaft**liner + 1 layer of 13mm **fire**shield

fireshield can be substituted with **multi**shield or **tru**rock

Fire Resistance Level

-/240/240 and **180/180/180** rated from both sides

Report FC13921

Stud Size (mm)	Wall Width (mm)	**Sound Insulation** for studs at 600mm centres and thinnest BMT **Rw (Rw + Ctr)**		
		No insulation	Pink® Partition 50mm 11kg/m³ R1.2	
51	177	57 (49)	60 (**53**)	Reports INSUL v9
64	190	57 (**50**)	60 (**55**)	
76	202	58 (**51**)	60 (**55**)	
92	218	58 (**51**)	61 (**56**)	
150	276	59 (**53**)	61 (**57**)	

SSW514

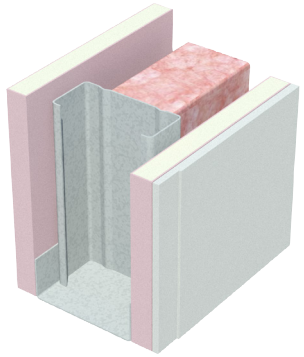

- 1 layer of 16mm **fire**shield
- Steel stud framing at maximum 600mm centres
- 1 layer of 16mm **fire**shield + 6mm Villaboard™

fireshield can be substituted with **fire**shield or **tru**rock

Fire Resistance Level

-/90/90 and **60/60/60** rated from both sides

Report FC13921

Stud Size (mm)	Wall Width (mm)	**Sound Insulation** for studs at 600mm centres and thinnest BMT **Rw (Rw + Ctr)**		
		No insulation	Pink® Partition 50mm 11kg/m³ R1.2	
51	89	44 (32)	49 (37)	Reports INSUL v9
64	102	46 (34)	51 (39)	
76	114	47 (36)	52 (43)	
92	130	48 (38)	53 (43)	
150	188	50 (42)	56 (47)	

SSW516

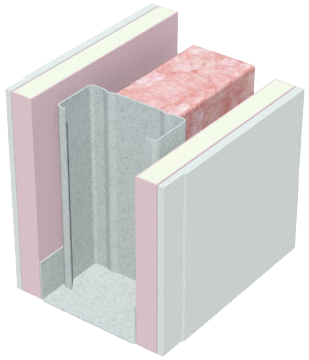

- 1 layer of 16mm **fire**shield + 6mm Villaboard™
- Steel stud framing at maximum 600mm centres
- 1 layer of 16mm **fire**shield + 6mm Villaboard™

fireshield can be substituted with **fire**shield or **tru**rock

Fire Resistance Level

-/120/120 and **60/60/60** rated from both sides

Report FC13921

Stud Size (mm)	Wall Width (mm)	**Sound Insulation** for studs at 600mm centres and thinnest BMT **Rw (Rw + Ctr)**		
		No insulation	Pink® Partition 50mm 11kg/m³ R1.2	
51	95	46 (39)	54 (44)	Reports Day Design 3094-33
64	108	47 (40)	55 (46)	
76	120	47 (40)	55 (47)	
92	136	48 (41)	56 (48)	
150	194	51 (42)	56 (**51**)	

SSW386

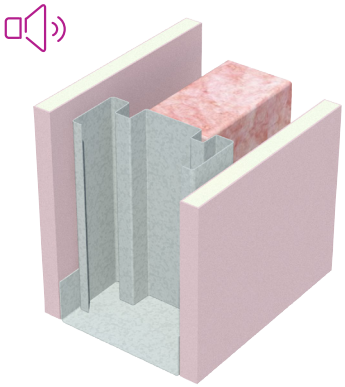

- 1 layer of 13mm **fire**shield
- 92mm **acoustic** stud at maximum 600mm centres
- 1 layer of 13mm **fire**shield

fireshield can be substituted with **multi**shield or **tru**rock

Fire Resistance Level

-/60/60 and **30/30/30** rated from both sides

Report FC13921

Stud Size (mm)	Wall Width (mm)	**Sound Insulation** for studs at 600mm centres and thinnest BMT Rw (Rw + Ctr)		
		No insulation	Pink® Partition 75mm 11 kg/m³ R1.8	Reports
92 Siniat Acoustic Stud	118	42 (35)	50 (41)[1]	Day Design 5008.28 [1]TL609-02

SSW387

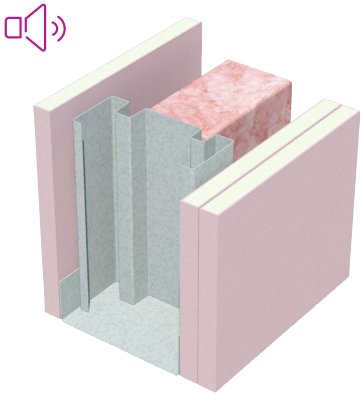

- 1 layer of 13mm **fire**shield
- 92mm **acoustic** stud at maximum 600mm centres
- 2 layers of 13mm **fire**shield

fireshield can be substituted with **multi**shield or **tru**rock

Fire Resistance Level

-/90/90 and **30/30/30** rated from both sides

Report FC13921

Stud Size (mm)	Wall Width (mm)	**Sound Insulation** for studs at 600mm centres and thinnest BMT Rw (Rw + Ctr)		
		No insulation	Pink® Partition 75mm 11 kg/m³ R1.8	Report
92 Siniat Acoustic Stud	131	48 (41)	56 (47)	Day Design 5008.28

SSW388

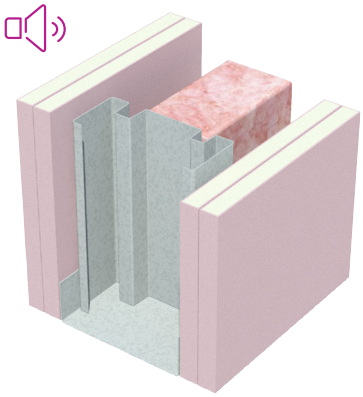

- 2 layers of 13mm **fire**shield
- 92mm **acoustic** stud at maximum 600mm centres
- 2 layers of 13mm **fire**shield

fireshield can be substituted with **multi**shield or **tru**rock

Fire Resistance Level

-/120/120 and **90/90/90** rated from both sides

Report FC13921

Stud Size (mm)	Wall Width (mm)	**Sound Insulation** for studs at 600mm centres and thinnest BMT Rw (Rw + Ctr)		
		No insulation	Pink® Partition 75mm 11 kg/m³ R1.8	Report
92 Siniat Acoustic Stud	144	54 (48)	60 (**52**)	Day Design 5008.28

SSW396

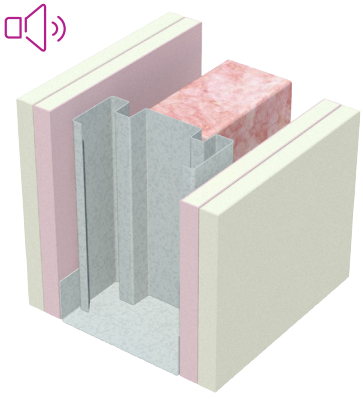

- 1 layer of 13mm **fire**shield + 13mm **masta**shield
- 92mm **acoustic** stud at maximum 600mm centres
- 1 layer of 13mm **fire**shield + 13mm **masta**shield

mastashield can be substituted with **water**shield
fireshield can be substituted with **multi**shield or **tru**rock
Order of wall linings can be reversed

Fire Resistance Level

-/90/90 and **60/60/60** rated from both sides

Report FC13921

Stud Size (mm)	Wall Width (mm)	**Sound Insulation** for studs at 600mm centres and thinnest BMT Rw (Rw + Ctr)		
		No insulation	Pink® Partition 75mm 11 kg/m³ R1.8	Reports
92 Siniat Acoustic Stud	144	51 (45)	58 (**51**)[1]	Day Design 5008.28 [1]TL609-03

SSW551

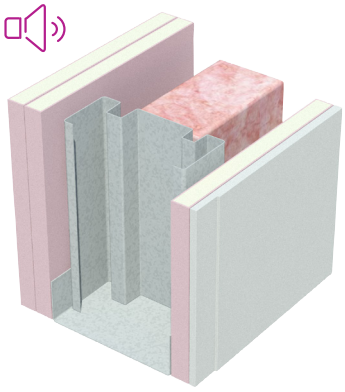

- 2 layers of 13mm **fire**shield
- 92mm **acoustic** stud at maximum 600mm centres
- 1 layer of 13mm **fire**shield + 6mm Villaboard™

fireshield can be substituted with **multi**shield or **tru**rock

Fire Resistance Level
-/90/90 and **30/30/30** rated from both sides
Report FC13921

Stud Size (mm)	Wall Width (mm)	**Sound Insulation** for studs at 600mm centres and thinnest BMT Rw (Rw + Ctr)		
		No insulation	Pink® Partition 75mm 11 kg/m³ R1.8	
92 Siniat Acoustic Stud	137	51 (44)	59 (**50**)	Report Day Design 5008.28

SSW552

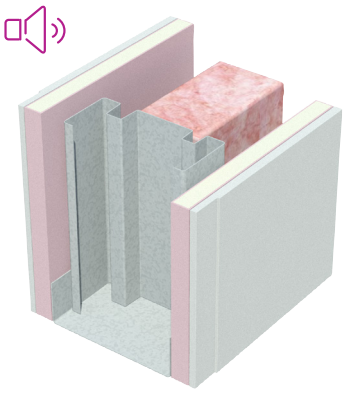

- 1 layer of 13mm **fire**shield + 6mm Villaboard™
- 92mm **acoustic** stud at maximum 600mm centres
- 1 layer of 13mm **fire**shield + 6mm Villaboard™

fireshield can be substituted with **multi**shield or **tru**rock

Fire Resistance Level
-/90/90 and **30/30/30** rated from both sides
Report FC13921

Stud Size (mm)	Wall Width (mm)	**Sound Insulation** for studs at 600mm centres and thinnest BMT Rw (Rw + Ctr)		
		No insulation	Pink® Partition 75mm 11 kg/m³ R1.8	
92 Siniat Acoustic Stud	130	51 (44)	58 (**50**)	Report Day Design 5008.28

SSW391

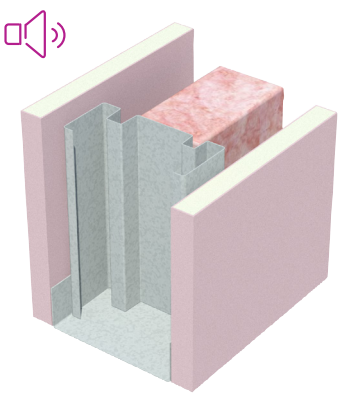

- 1 layer of 16mm **fire**shield
- 92mm **acoustic** stud at maximum 600mm centres
- 1 layer of 16mm **fire**shield

fireshield can be substituted with **multi**shield or **tru**rock

Fire Resistance Level
-/90/90 and **60/60/60** rated from both sides using Glasswool insulation
-/60/60 and **60/60/60** rated from both sides using either polyester insulation or no insulation
Report FC13921

Stud Size (mm)	Wall Width (mm)	**Sound Insulation** for studs at 600mm centres and thinnest BMT Rw (Rw + Ctr)		
		No insulation	Pink® Partition 75mm 11 kg/m³ R1.8	
92 Siniat Acoustic Stud	124	42 (36)	51 (43)[1]	Reports Day Design 5008.28 [1]TL609-1

SSW392

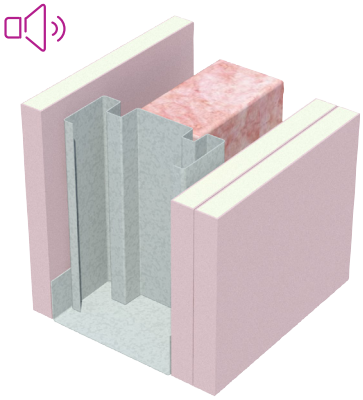

- 1 layer of 16mm **fire**shield
- 92mm **acoustic** stud at maximum 600mm centres
- 2 layers of 16mm **fire**shield

fireshield can be substituted with **multi**shield or **tru**rock

Fire Resistance Level
-/120/120 and **60/60/60** rated from both sides
Report FC13921

Stud Size (mm)	Wall Width (mm)	**Sound Insulation** for studs at 600mm centres and thinnest BMT Rw (Rw + Ctr)		
		No insulation	Pink® Partition 75mm 11 kg/m³ R1.8	
92 Siniat Acoustic Stud	140	50 (44)	58 (**50**)	Report Day Design 5008.28

SSW393

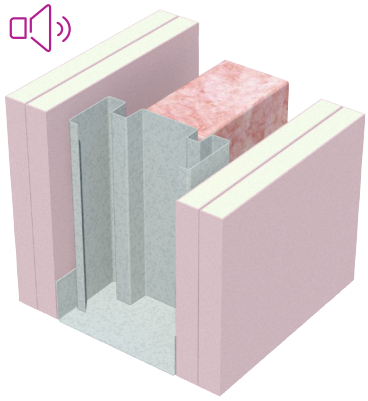

- 2 layers of 16mm **fire**shield
- 92mm **acoustic** stud at maximum 600mm centres
- 2 layers of 16mm **fire**shield

fireshield can be substituted with **multi**shield or **tru**rock

Fire Resistance Level

-/120/120 and **120/120/120** rated from both sides

Report FC13921

Stud Size (mm)	Wall Width (mm)	**Sound Insulation** for studs at 600mm centres and thinnest BMT Rw (Rw + Ctr)		
		No insulation	Pink® Partition 75mm 11 kg/m³ R1.8	
92 Siniat Acoustic Stud	156	54 (47)	62 (**54**)	Report Day Design 5008.28

SSW397

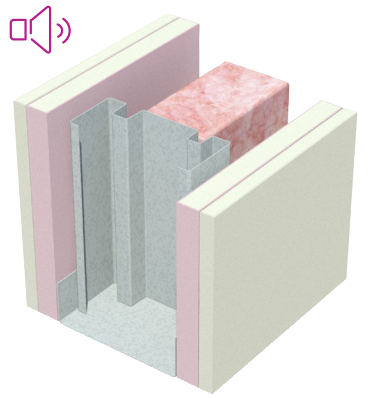

- 1 layer of 16mm **fire**shield + 10mm **masta**shield
- 92mm **acoustic** stud at maximum 600mm centres
- 1 layer of 16mm **fire**shield + 10mm **masta**shield

mastashield can be substituted with **water**shield
fireshield can be substituted with **multi**shield or **tru**rock

Fire Resistance Level

-/120/120 and **60/60/60** rated from both sides

Report FC13921

Stud Size (mm)	Wall Width (mm)	**Sound Insulation** for studs at 600mm centres and thinnest BMT Rw (Rw + Ctr)		
		No insulation	Pink® Partition 75mm 11 kg/m³ R1.8	
92 Siniat Acoustic Stud	144	53 (45)	61 (**51**)	Report Day Design 5008.28

SSW555

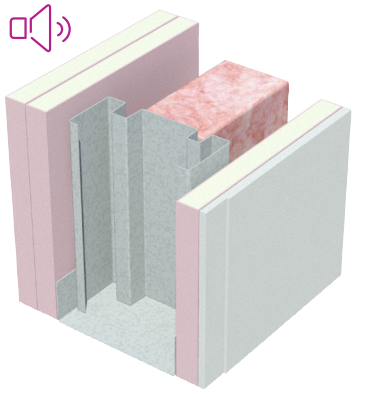

- 2 layers of 16mm **fire**shield
- 92mm **acoustic** stud at maximum 600mm centres
- 1 layer of 16mm **fire**shield + 6mm Villaboard™

fireshield can be substituted with **multi**shield or **tru**rock
Order of wall linings can be reversed

Fire Resistance Level

-/120/120 and **60/60/60** rated from both sides

Report FC13921

Stud Size (mm)	Wall Width (mm)	**Sound Insulation** for studs at 600mm centres and thinnest BMT Rw (Rw + Ctr)		
		No insulation	Pink® Partition 75mm 11 kg/m³ R1.8	
92 Siniat Acoustic Stud	146	54 (46)	62 (**53**)	Report Day Design 5008.28

SSW556

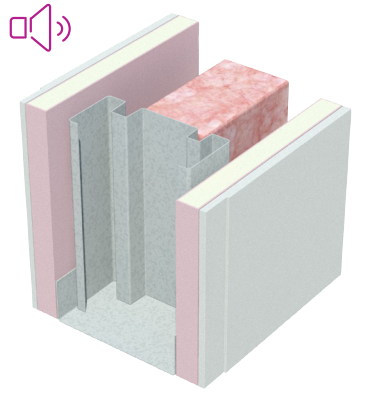

- 1 layer of 16mm **fire**shield + 6mm Villaboard™
- 92mm **acoustic** stud at maximum 600mm centres
- 1 layer of 16mm **fire**shield + 6mm Villaboard™

fireshield can be substituted with **multi**shield or **tru**rock
Order of wall linings can be reversed

Fire Resistance Level

-/120/120 and **60/60/60** rated from both sides

Report FC13921

Stud Size (mm)	Wall Width (mm)	**Sound Insulation** for studs at 600mm centres and thinnest BMT Rw (Rw + Ctr)		
		No insulation	Pink® Partition 75mm 11 kg/m³ R1.8	
92 Siniat Acoustic Stud	136	52 (45)	61 (**51**)	Report Day Design 5008.28

SSW330

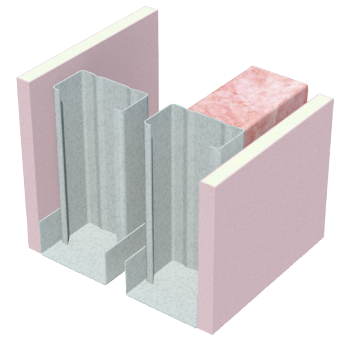

- 1 layer of 13mm **fire**shield
- Steel stud framing at maximum 600mm centres
- Minimum 20mm air gap
- Steel stud framing at maximum 600mm centres
- 1 layer of 13mm **fire**shield

fireshield can be substituted with **multi**shield or **tru**rock

Fire Resistance Level

-/60/60 and **30/30/30** rated from both sides

Report FC13921

Cavity Size (mm)	Width (mm)	Sound Insulation Rw (Rw + Ctr)		
		No insulation	Pink® Partition 50mm 11kg/m³ R1.2	Reports Day Design 3094-33 [1]ATF 1528 Note: Impact sound Resistant - Discontinuous Construction
148 (2 x 64mm studs plus 20mm air gap)	174	42 (35)[1]	50 (38)	
200 (2 x 64mm studs plus 72mm air gap)	226	43 (36)	51 (41)	

SSW331

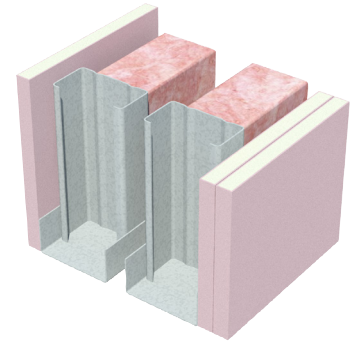

- 1 layer of 13mm **fire**shield
- Steel stud framing at maximum 600mm centres
- Minimum 20mm air gap
- Steel stud framing at maximum 600mm centres
- 2 layers of 13mm **fire**shield

fireshield can be substituted with **multi**shield or **tru**rock

Fire Resistance Level

-/90/90 and **30/30/30** rated from both sides

Report FC13921

Cavity Size (mm)	Width (mm)	Sound Insulation Rw (Rw + Ctr)			
		No insulation	Pink® Partition 50mm 11kg/m³ R1.2	**2 x** Pink® Partition 75mm 11 kg/m³ R1.8	Day Design 4738-L15 Note: Impact sound Resistant - Discontinuous Construction
148 (2 x 64mm studs plus 20mm air gap)	187	46 (39)	56 (45)	60 (**50**)	
200 (2 x 64mm studs plus 72mm air gap)	239	47 (39)	57 (46)	61 (**50**)	

SSW332

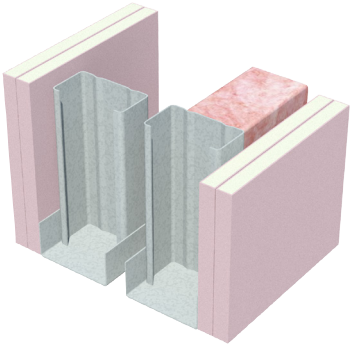

- 2 layers of 13mm **fire**shield
- Steel stud framing at maximum 600mm centres
- Minimum 20mm air gap
- Steel stud framing at maximum 600mm centres
- 2 layers of 13mm **fire**shield

fireshield can be substituted with **multi**shield or **tru**rock

Fire Resistance Level

-/120/120 and **90/90/90** rated from both sides

Report FC13921

Cavity Size (mm)	Width (mm)	Sound Insulation Rw (Rw + Ctr)			
		No insulation	Pink® Partition 50mm 11kg/m³ R1.2	**2 x** Pink® Partition 75mm 11 kg/m³ R1.8	Day Design 4738-L12 [1]ATF1534 [2]TL525-1 Note: Impact sound Resistant - Discontinuous Construction
148 (2 x 64mm studs plus 20mm air gap)	200	53 (45)[1]	62 (**50**)	63 (**53**)[2]	
200 (2 x 64mm studs plus 72mm air gap)	252	55 (46)	63 (**52**)	64 (**55**)	

SSW380

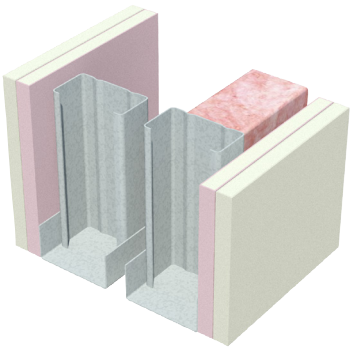

- 1 layer of 13mm **fire**shield + 13mm **masta**shield
- Steel stud framing at maximum 600mm centres
- Minimum 20mm air gap
- Steel stud framing at maximum 600mm centres
- 1 layer of 13mm **fire**shield + 13mm **masta**shield

fireshield can be substituted with **multi**shield or **tru**rock
mastashield can be substituted with **water**shield

Fire Resistance Level

-/90/90 and **60/60/60** rated from both sides

Report FC13921

Cavity Size (mm)	Width (mm)	Sound Insulation Rw (Rw + Ctr)				
		No insulation	Pink® Partition 50mm 11kg/m³ R1.2	**2 x** Pink® Partition 50mm 11kg/m³ R1.2	Pink® Partition 75mm 11 kg/m³ R1.8	Reports Day Design 3094-48 Note: Impact sound Resistant - Discontinuous Construction
148 (2 x 64mm studs plus 20mm air gap)	200	51 (42)	61 (48)	64 (**51**)	62 (**50**)	
200 (2 x 64mm studs plus 72mm air gap)	252	52 (44)	62 (**50**)	65 (**52**)	63 (**52**)	

'2 x' indicates insulation in both frames.

SSW531

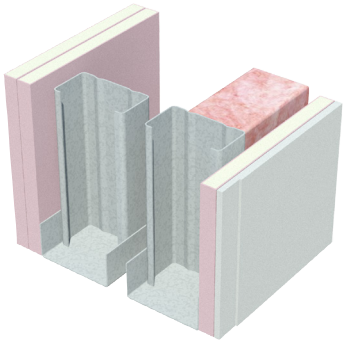

- 2 layers of 13mm **fire**shield
- Steel stud framing at maximum 600mm centres
- Minimum 20mm air gap
- Steel stud framing at maximum 600mm centres
- 1 layer of 13mm **fire**shield + 6mm Villaboard™

fireshield can be substituted with **multi**shield or **tru**rock

Fire Resistance Level

-/90/90 and **30/30/30** rated from both sides

Report FC13921

Cavity Size (mm)	Width (mm)	Sound Insulation Rw (Rw + Ctr)		
		No insulation	Pink® Partition 50mm 11kg/m³ R1.2	Report
148 (2 x 64mm studs plus 20mm air gap)	193	52 (44)	63 (**50**)	Day Design 3094-33 Note: Impact sound Resistant - Discontinuous Construction
200 (2 x 64mm studs plus 72mm air gap)	245	54 (45)	64 (**52**)	

SSW532

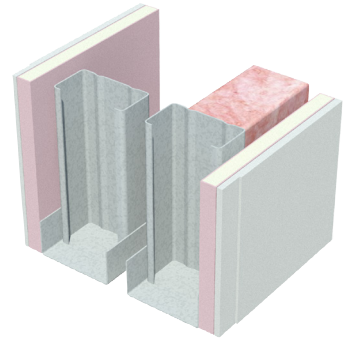

- 1 layer of 13mm **fire**shield + 6mm Villaboard™
- Steel stud framing at maximum 600mm centres
- Minimum 20mm air gap
- Steel stud framing at maximum 600mm centres
- 1 layer of 13mm **fire**shield + 6mm Villaboard™

fireshield can be substituted with **multi**shield or **tru**rock

Fire Resistance Level

-/90/90 and **30/30/30** rated from both sides

Report FC13921

Cavity Size (mm)	Width (mm)	Sound Insulation Rw (Rw + Ctr)		
		No insulation	Pink® Partition 50mm 11kg/m³ R1.2	Day Design 3094-33
148 (2 x 64mm studs plus 20mm air gap)	186	52 (43)	62 (49) ◧	Note: Impact sound Resistant - Discontinuous Construction
200 (2 x 64mm studs plus 72mm air gap)	238	54 (45)	63 (**52**)	◧ Use Pink® Partition 75mm 11 kg/m³ R1.8 to achieve 62 (**50**)

SSW335

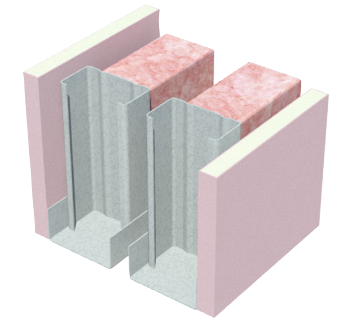

- 1 layer of 16mm **fire**shield
- Steel stud framing at maximum 600mm centres
- Minimum 20mm air gap
- Steel stud framing at maximum 600mm centres
- 1 layer of 16mm **fire**shield

fireshield can be substituted with **multi**shield or **tru**rock

Fire Resistance Level

-/90/90 and **60/60/60** rated from both sides using Glasswool insulation

-/60/60 and **60/60/60** rated from both sides using either polyester insulation or no insulation

Report FC13921

Cavity Size (mm)	Width (mm)	Sound Insulation Rw (Rw + Ctr)					
		No insulation	Pink 50mm 11 kg/m³ R1.2	**2 x** Pink 75mm 11 kg/m³ R1.8	**2 x** Pink 75mm 14 kg/m³ R1.9	**2 x** Pink 110mm 11 kg/m³ R2.5	Reports
148 (2 x 64mm studs plus 20mm air gap)	180	44 (37)	53 (42)	60 (**50**)[4]	60 (**50**)[2]	-	Day Design 3094-33, [1]TL525-3 [2]TL574-1 [3]TL525-2 [4]TL685-4
172 (2 x 64mm studs plus 44mm air gap)	204	-	-	-	-	60 (**50**)[3]	Note: Impact sound Resistant - Discontinuous Construction
200 (2 x 64mm studs plus 72mm air gap)	232	45 (38)	54 (44)	61 (**51**)[1]	-	-	

SSW336

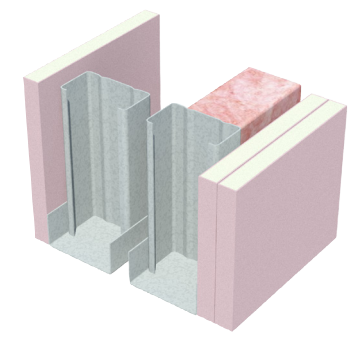

- 1 layer of 16mm **fire**shield or **multi**shield
- Steel stud framing at maximum 600mm centres
- Minimum 20mm air gap
- Steel stud framing at maximum 600mm centres
- 2 layers of 16mm **fire**shield or **multi**shield

fireshield can be substituted with **multi**shield or **tru**rock

Fire Resistance Level

-/120/120 and **60/60/60** rated from both sides

Report FC13921

Cavity Size (mm)	Width (mm)	Sound Insulation Rw (Rw + Ctr)			
		No insulation	Pink® Partition 50mm 11kg/m³ R1.2	**2 x** Pink® Partition 50mm 11kg/m³ R1.2	Report
148 (2 x 64mm studs plus 20mm air gap)	196	50 (42)	59 (48)	62 (**51**)	Day Design 3094-33 Note: Impact sound Resistant - Discontinuous Construction
200 (2 x 64mm studs plus 72mm air gap)	248	52 (44)	60 (**50**)	-	

'2 x' indicates insulation in both frames.

SSW337

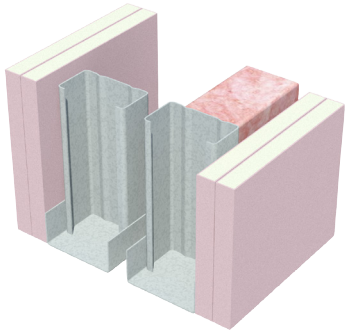

- 2 layers of 16mm **fire**shield
- Steel stud framing at maximum 600mm centres
- Minimum 20mm air gap
- Steel stud framing at maximum 600mm centres
- 2 layers of 16mm **fire**shield

fireshield can be substituted with **multi**shield or **tru**rock

Fire Resistance Level

-/120/120 and **120/120/120** rated from both sides

Report FC13921

Cavity Size (mm)	Width (mm)	Sound Insulation Rw (Rw + Ctr)			
		No insulation	Pink® Partition 50mm 11kg/m³ R1.2	**2 x** Pink® Partition 50mm 11kg/m³ R1.2	Report
148 (2 x 64mm studs plus 20mm air gap)	196	56 (47)	65 (**53**)	65 (**55**)	Day Design 4738-L4 Note: Impact sound Resistant - Discontinuous Construction
200 (2 x 64mm studs plus 72mm air gap)	248	58 (49)	66 (**56**)	67 (**57**)	

SSW339

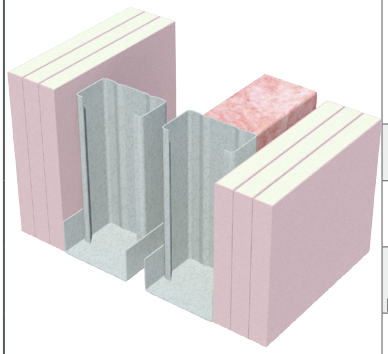

- 3 layers of 16mm **fire**shield
- Steel stud framing at maximum 600mm centres
- Minimum 20mm air gap
- Steel stud framing at maximum 600mm centres
- 3 layers of 16mm **fire**shield

fireshield can be substituted with **multi**shield or **tru**rock

Fire Resistance Level

-/240/240 and **120/120/120** rated from both sides

Report FC13921

Cavity Size (mm)	Width (mm)	Sound Insulation Rw (Rw + Ctr)		
		No insulation	Pink® Partition 50mm 11kg/m³ R1.2	Report
148 (2 x 64mm studs plus 20mm air gap)	244	62 (**53**)	72 (**61**)	Day Design 3094-33 Note: Impact sound Resistant - Discontinuous Construction
200 (2 x 64mm studs plus 72mm air gap)	296	64 (**55**)	73 (**63**)	

SSW581

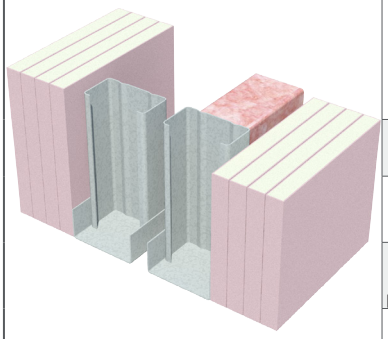

- 4 layers of 16mm **fire**shield
- Steel stud framing at maximum 600mm centres
- Minimum 20mm air gap
- Steel stud framing at maximum 600mm centres
- 4 layers of 16mm **fire**shield

fireshield can be substituted with **multi**shield or **tru**rock

Fire Resistance Level

-/240/240 and **180/180/180** rated from both sides

Report FC13921

Cavity Size (mm)	Width (mm)	Sound Insulation Rw (Rw + Ctr)		
		No insulation	Pink® Partition 50mm 11kg/m³ R1.2	Report
148 (2 x 64mm studs plus 20mm air gap)	276	69 (**63**)	79 (**71**)	INSUL v9 Note: Impact sound Resistant - Discontinuous Construction
200 (2 x 64mm studs plus 72mm air gap)	328	69 (**64**)	80 (**73**)	

SSW583

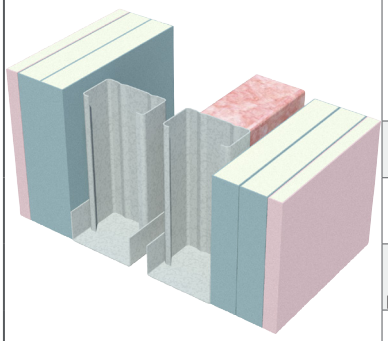

- 2 layers of 25mm **shaft**liner + 1 layer of 13mm **fire**shield
- Steel stud framing at maximum 600mm centres
- Minimum 20mm air gap
- Steel stud framing at maximum 600mm centres
- 2 layers of 25mm **shaft**liner + 1 layer of 13mm **fire**shield

fireshield can be substituted with **multi**shield or **tru**rock

Fire Resistance Level

-/240/240 and **180/180/180** rated from both sides

Report FC13921

Cavity Size (mm)	Width (mm)	Sound Insulation Rw (Rw + Ctr)		
		No insulation	Pink® Partition 50mm 11kg/m³ R1.2	Report
148 (2 x 64mm studs plus 20mm air gap)	274	66 (**60**)	77 (**70**)	INSUL v9 Note: Impact sound Resistant - Discontinuous Construction
200 (2 x 64mm studs plus 72mm air gap)	326	66 (**61**)	78 (**71**)	

'2 x' indicates insulation in both frames.

SSW381

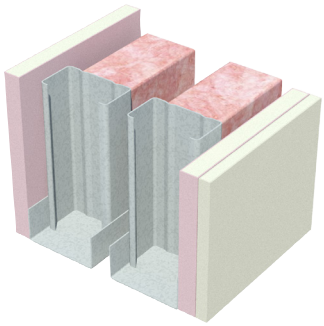

- 1 layer of 16mm **fire**shield
- Steel stud framing at maximum 600mm centres
- Minimum 20mm air gap
- Steel stud framing at maximum 600mm centres
- 1 layer of 16mm **fire**shield + 10mm **masta**shield

mastashield can be substituted with **water**shield
fireshield can be substituted with **multi**shield or **tru**rock

Fire Resistance Level

-/90/90 and **60/60/60** rated from both sides

Report FC13921

Cavity Size (mm)	Width (mm)	Sound Insulation Rw (Rw + Ctr)				
		No insulation	Pink® Partition 50mm 11kg/m³ R1.2	Pink® Partition 75mm 11 kg/m³ R1.8	**2 x** Pink® Partition 75mm 11 kg/m³ R1.8	Report
148 (2 x 64mm studs plus 20mm air gap)	190	46 (39)	56 (46)	57 (48)	60 (**50**)	Day Design 3094-39 Note: Impact sound Resistant - Discontinuous Construction
200 (2 x 64mm studs plus 72mm air gap)	242	48 (40)	58 (48)	59 (**50**)	62 (**52**)	

SSW382

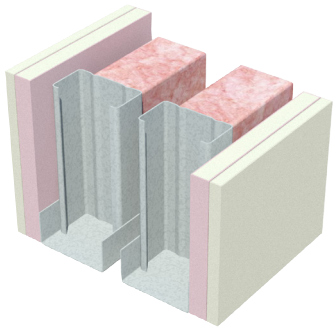

- 1 layer of 16mm **fire**shield + 10mm **masta**shield
- Steel stud framing at maximum 600mm centres
- Minimum 20mm air gap
- Steel stud framing at maximum 600mm centres
- 1 layer of 16mm **fire**shield + 10mm **masta**shield

mastashield can be substituted with **water**shield
fireshield can be substituted with **multi**shield or **tru**rock

Fire Resistance Level

-/120/120 and **60/60/60** rated from both sides

Report FC13921

Cavity Size (mm)	Width (mm)	Sound Insulation Rw (Rw + Ctr)			
		No insulation	Pink® Partition 50mm 11kg/m³ R1.2	**2 x** Pink® Partition 50mm 11kg/m³ R1.2	Report
148 (2 x 64mm studs plus 20mm air gap)	200	50 (43)	61 (49)	64 (**52**)	Day Design 3094-33 Note: Impact sound Resistant - Discontinuous Construction
200 (2 x 64mm studs plus 72mm air gap)	252	52 (44)	62 (**51**)	-	

SSW534

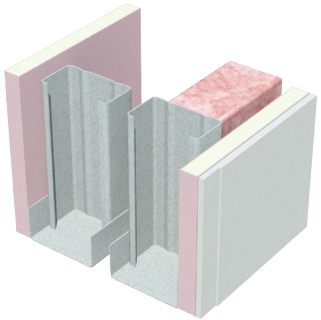

- 1 layer of 16mm **fire**shield
- Steel stud framing at maximum 600mm centres
- Minimum 20mm air gap
- Steel stud framing at maximum 600mm centres
- 1 layer of 16mm **fire**shield + 6mm Villaboard™

fireshield can be substituted with **multi**shield or **tru**rock
Order of wall linings can be reversed

Fire Resistance Level

-/90/90 and **60/60/60** rated from both sides

Report FC13921

Cavity Size (mm)	Width (mm)	Sound Insulation Rw (Rw + Ctr)		
		No insulation	Pink® Partition 50mm 11kg/m³ R1.2	Day Design 3094-33
148 (2 x 64mm studs plus 20mm air gap)	186	50 (42)	59 (47)	Note: Impact sound Resistant - Discontinuous Construction
200 (2 x 64mm studs plus 72mm air gap)	238	51 (43)	59 (49)	Use Pink® Partition 75mm 11 kg/m³ R1.8 to achieve 59 (**50**)

SSW535

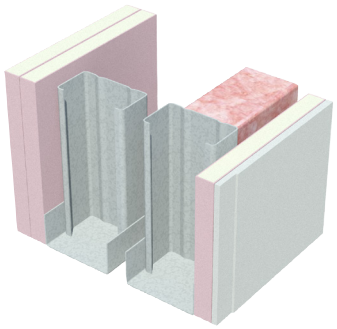

- 2 layers of 16mm **fire**shield
- Steel stud framing at maximum 600mm centres
- Minimum 20mm air gap
- Steel stud framing at maximum 600mm centres
- 1 layer of 16mm **fire**shield + 6mm Villaboard™

fireshield can be substituted with **multi**shield or **tru**rock
Order of wall linings can be reversed

Fire Resistance Level

-/120/120 and **60/60/60** rated from both sides

Report FC13921

Cavity Size (mm)	Width (mm)	Sound Insulation Rw (Rw + Ctr)		
		No insulation	Pink® Partition 50mm 11kg/m³ R1.2	Report
148 (2 x 64mm studs plus 20mm air gap)	202	55 (47)	65 (**52**)	Day Design 3094-33 Note: Impact sound Resistant - Discontinuous Construction
200 (2 x 64mm studs plus 72mm air gap)	254	57 (48)	66 (**55**)	

'2 x' indicates insulation in both frames.

SSW536

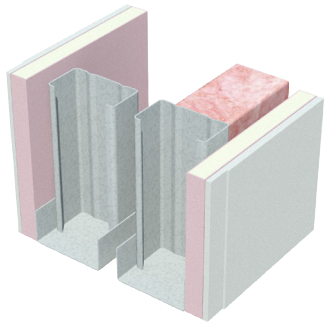

- 1 layer of 16mm **fire**shield + 6mm Villaboard™
- Steel stud framing at maximum 600mm centres
- Minimum 20mm air gap
- Steel stud framing at maximum 600mm centres
- 1 layer of 16mm **fire**shield + 6mm Villaboard™

fireshield can be substituted with **multi**shield or **tru**rock
Order of wall linings can be reversed

Fire Resistance Level
-/120/120 and **60/60/60**
rated from both sides
Report FC13921

Cavity Size (mm)	Width (mm)	Sound Insulation Rw (Rw + Ctr)		
		No insulation	Pink® Partition 50mm 11kg/m³ R1.2	Report
148 (2 x 64mm studs plus 20mm air gap)	192	54 (46)	64 (**51**)	Day Design 3094-33
200 (2 x 64mm studs plus 72mm air gap)	244	56 (47)	65 (**54**)	Note: Impact sound Resistant - Discontinuous Construction

SSW320

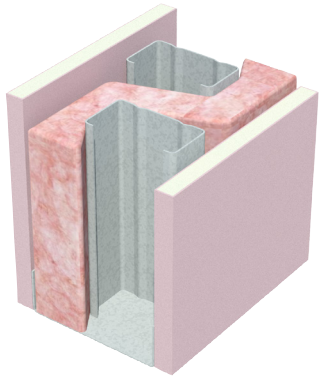

- 1 layer of 13mm **fire**shield
- Staggered steel studs at maximum 600mm centres (300mm staggered)
- 1 layer of 13mm **fire**shield

fireshield can be substituted with **multi**shield or **tru**rock

Fire Resistance Level
-/60/60 and **30/30/30**
rated from both sides
Report FC13921

Track Width (mm)	Width (mm)	Sound Insulation Rw (Rw + Ctr)			
		No insulation	Pink® Partition 50mm 11kg/m³ R1.2	Pink® Partition 75mm 14kg/m³ R1.9	Report
92	118	38 (30)	47 (36)	50 (41)[1]	Day Design 3094-33 [1]TL554-18
150	176	39 (30)	48 (39)	-	Note: Impact sound Resistant

SSW321

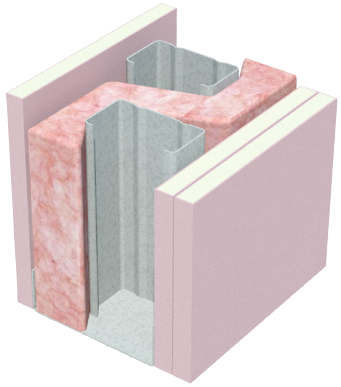

- 1 layer of 13mm **fire**shield
- Staggered steel studs at maximum 600mm centres (300mm staggered)
- 2 layers of 13mm **fire**shield

fireshield can be substituted with **multi**shield or **tru**rock

Fire Resistance Level
-/90/90 and **30/30/30**
rated from both sides
Report FC13921

Track Width (mm)	Width (mm)	Sound Insulation Rw (Rw + Ctr)			
		No insulation	Pink® Partition 50mm 11kg/m³ R1.2	Pink® Partition 75mm 14kg/m³ R1.9	Report
92	131	43 (34)	51 (43)	56 (46)[1]	Day Design 3094-33 [1]TL554-19
150	189	45 (35)	52 (46)	-	Note: Impact sound Resistant

SSW322

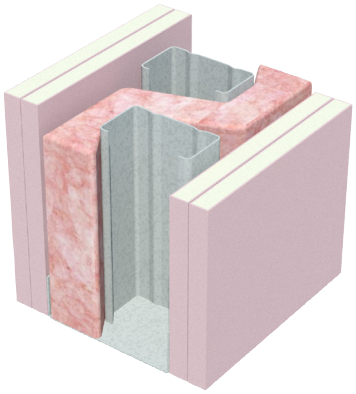

- 2 layers of 13mm **fire**shield
- Staggered steel studs at maximum 600mm centres (300mm staggered)
- 2 layers of 13mm **fire**shield

fireshield can be substituted with **multi**shield or **tru**rock

Fire Resistance Level
-/120/120 and **90/90/90**
rated from both sides
Report FC13921

Track Width (mm)	Width (mm)	Sound Insulation Rw (Rw + Ctr)		
		No insulation	Pink® Partition 50mm 11kg/m³ R1.2	Report
92	144	47 (40)	58 (**50**)	Day Design 3094-33
150	202	49 (41)	58 (**52**)	Note: Impact sound Resistant

SSW520

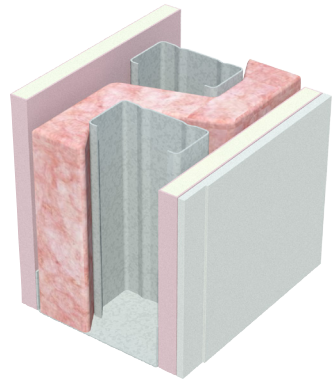

- 1 layer of 13mm **fire**shield
- Staggered steel studs at maximum 600mm centres (300mm staggered)
- 1 layer of 13mm **fire**shield + 6mm Villaboard™

fireshield can be substituted with **multi**shield or **tru**rock
Order of wall linings can be reversed

Fire Resistance Level
-/60/60 and **30/30/30** rated from both sides
Report FC13921

Track Width (mm)	Width (mm)	Sound Insulation Rw (Rw + Ctr)		
		No insulation	Pink® Partition 50mm 11kg/m³ R1.2	Report Day Design 3094-33 Note: Impact sound Resistant
92	124	43 (34)	51 (43)	
150	182	45 (35)	53 (46)	

SSW522

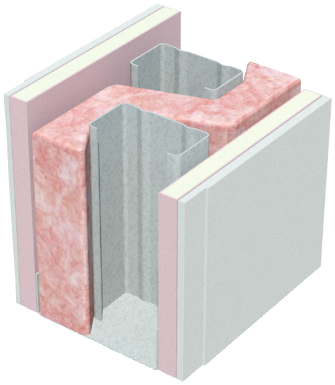

- 1 layer of 13mm **fire**shield + 6mm Villaboard™
- Staggered steel studs at maximum 600mm centres (300mm staggered)
- 1 layer of 13mm **fire**shield + 6mm Villaboard™

fireshield can be substituted with **multi**shield or **tru**rock
Order of wall linings can be reversed

Fire Resistance Level
-/90/90 and **30/30/30** rated from both sides
Report FC13921

Track Width (mm)	Wall Width (mm)	Sound Insulation Rw (Rw + Ctr)		
		No insulation	Pink® Partition 50mm 11kg/m³ R1.2	Report Day Design 3094-33 Note: Impact sound Resistant
92	130	47 (37)	56 (48)	
150	188	49 (39)	57 (**51**)	

SSW325

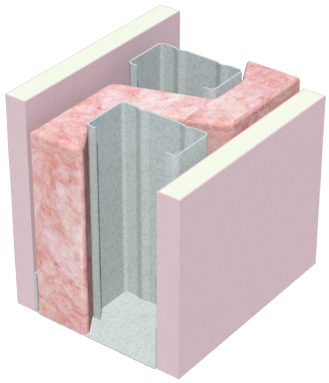

- 1 layer of 16mm **fire**shield
- Staggered steel studs at maximum 600mm centres (300mm staggered)
- 1 layer of 16mm **fire**shield

fireshield can be substituted with **multi**shield or **tru**rock

Fire Resistance Level
-/90/90 and **60/60/60** rated from both sides using Glasswool insulation
-/60/60 and **60/60/60** rated from both sides using either polyester insulation or no insulation
Report FC13921

Track Width (mm)	Width (mm)	Sound Insulation Rw (Rw + Ctr)				
		No insulation	Pink® Partition 50mm 11kg/m³ R1.2	**2 x** Pink® Partition 50mm 11kg/m³ R1.2	Pink® Partition 75mm 11kg/m³ R1.8	Reports Day Design 3094-33, 5008-8 [1]TL510b Note: Impact sound Resistant
92	124	40 (32)	48 (41)	52 (44)[1]	50 (42)	
150	182	42 (33)	49 (44)	-	-	

SSW326

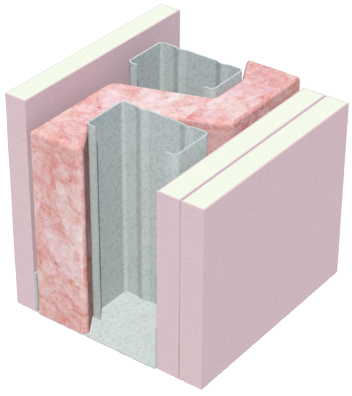

- 1 layer of 16mm **fire**shield
- Staggered steel studs at maximum 600mm centres (300mm staggered)
- 2 layers of 16mm **fire**shield

fireshield can be substituted with **multi**shield or **tru**rock

Fire Resistance Level
-/120/120 and **60/60/60** rated from both sides
Report FC13921

Track Width (mm)	Wall Width (mm)	Sound Insulation Rw (Rw + Ctr)		
		No insulation	Pink® Partition 50mm 11kg/m³ R1.2	Report Day Design 3094-33 Note: Impact sound Resistant
92	140	45 (36)	52 (46)	
150	198	47 (38)	53 (48)	

'2 x' indicates insulation in both frames

SSW327

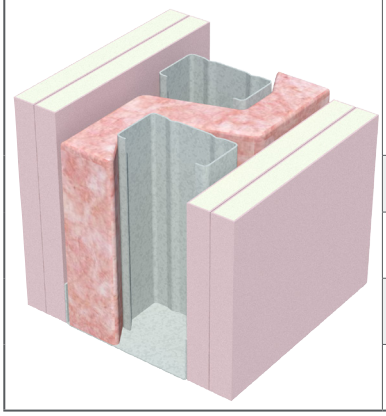

- 2 layers of 16mm **fire**shield
- Staggered steel studs at maximum 600mm centres (300mm staggered)
- 2 layers of 16mm **fire**shield

fireshield can be substituted with **multi**shield or **tru**rock

Fire Resistance Level

-/120/120 and **120/120/120** rated from both sides

Report FC13921

Track Width (mm)	Wall Width (mm)	Sound Insulation Rw (Rw + Ctr)		
		No insulation	Pink® Partition 50mm 11kg/m³ R1.2	Report Day Design 3094-33 Note: Impact sound Resistant
92	156	49 (42)	58 (**52**)	
150	214	51 (44)	59 (**53**)	

SSW524

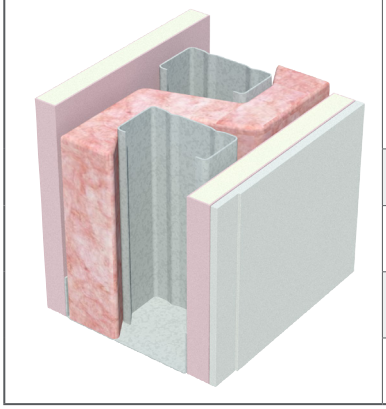

- 1 layer of 16mm **fire**shield
- Staggered steel studs at maximum 600mm centres (300mm staggered)
- 1 layer of 16mm **fire**shield + 6mm Villaboard™

fireshield can be substituted with **multi**shield or **tru**rock
Order of wall linings can be reversed

Fire Resistance Level

-/90/90 and **60/60/60** rated from both sides

Report FC13921

Track Width (mm)	Wall Width (mm)	Sound Insulation Rw (Rw + Ctr)		
		No insulation	Pink® Partition 50mm 11kg/m³ R1.2	Report Day Design 3094-33 Note: Impact sound Resistant
92	130	44 (35)	52 (45)	
150	188	46 (37)	53 (48)	

SSW526

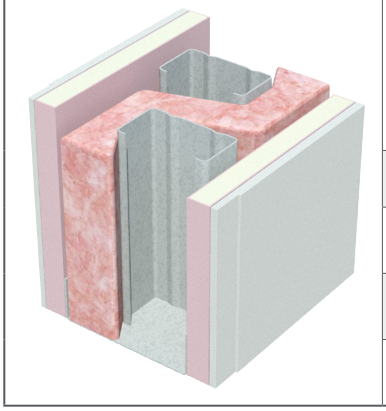

- 1 layer of 16mm **fire**shield + 6mm Villaboard™
- Staggered steel studs at maximum 600mm centres (300mm staggered)
- 1 layer of 16mm **fire**shield + 6mm Villaboard™

fireshield can be substituted with **multi**shield or **tru**rock
Order of wall linings can be reversed

Fire Resistance Level

-/120/120 and **60/60/60** rated from both sides

Report FC13921

Track Width (mm)	Wall Width (mm)	Sound Insulation Rw (Rw + Ctr)		
		No insulation	Pink® Partition 50mm 11kg/m³ R1.2	Report Day Design 3094-33 Note: Impact sound Resistant
92	136	48 (41)	59 (**51**)	
150	194	50 (42)	59 (**53**)	

General Requirements

	Non-fire Rated	Fire Rated
Install control joints in steel framed walls: > With plasterboard at 12m maximum intervals > With fibre cement at 9m maximum intervals for steel framing < 0.8mm BMT > With fibre cement at 6m maximum intervals for steel framing > 0.8mm BMT > With tiles at 4.8m maximum intervals (plasterboard or fibre cement) > At all control joints in the structure > At any change in the substrate > At the floor line in stairwells.	✓	✓
Only joint the face layer. As a minimum, use paper tape with any Siniat jointing compound applied in one or two coats to the thickness of two coats. Alternatively, use **bindex** fire and acoustic sealant according to the Product Data Sheet.		✓
Use approved fire rated penetration details. fire penetrations may require fire collars or other devices to maintain fire performance.		✓
Use **bindex** fire and acoustic sealant on all gaps and around perimeter.		✓
Attach all fixtures to studs or noggings/blocking. Wall anchors must not be fixed to the plasterboard of fire rated walls.		✓
Structural steel members in wall cavities have the Structural Adequacy component of the system's FRL.		✓
Wall systems with a Structural Adequacy component to their FRL may be built with any steel framing provided it is designed according to the relevant Australian Standards, has a minimum 51mm cavity and maximum 600mm horizontal or vertical framing centres for the fixing of linings.		✓

For acceptable modifications or variations to fire rated systems, refer to Section 2.3 fire Resistance

Framing

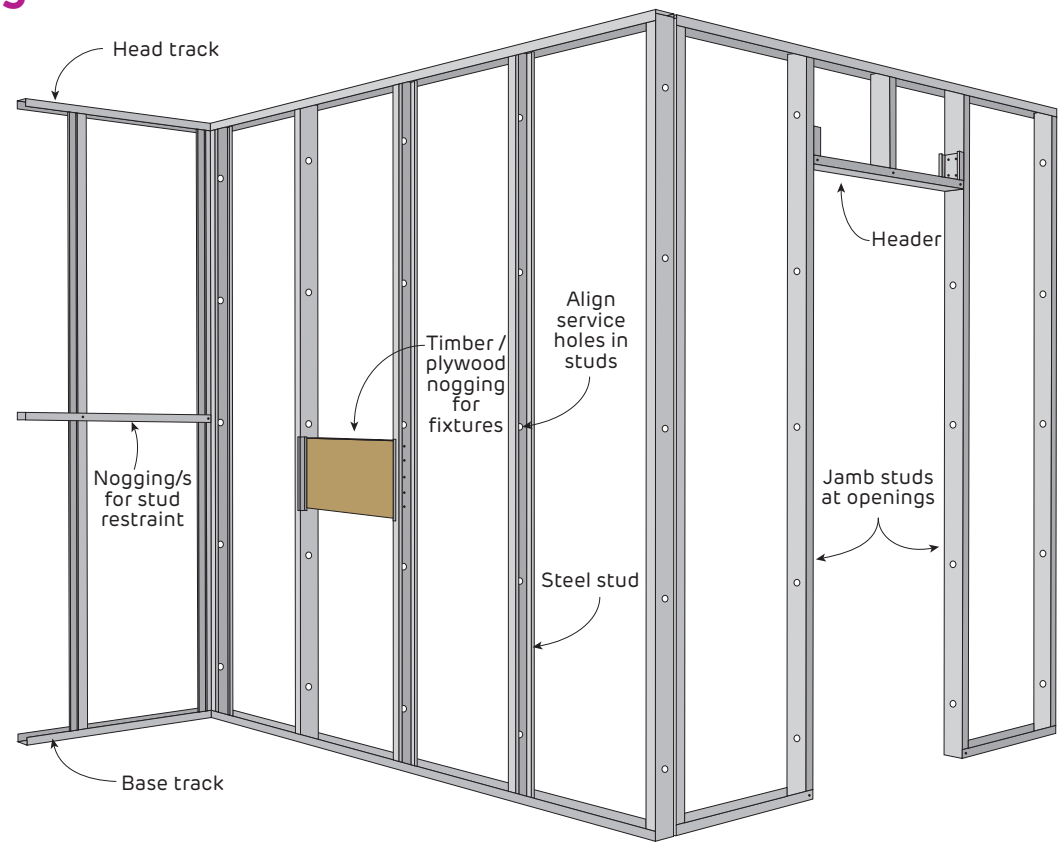

FIGURE 1 Internal Steel Frame Wall Layout

	Non-fire Rated	Fire Rated
Use a Deflection Head Track if soffit movement of up to 20mm is expected. For higher requirements contact Siniat. Refer to Construction Details for clearances.	✓	✓
Framing members as per framing table or structural design up to 600mm maximum spacing.	✓	✓
Face studs in the same direction if possible, to allow easier fastening of wall lining. However, installation of some services may require the studs to be positioned in opposite directions. Refer to Construction Details.	✓	✓
Twist studs into tracks and push studs down completely into bottom track.	✓	✓

Table 1 Maximum Head and Base Track Anchor Spacing

Stud Spacing (mm)	Maximum Anchor Spacing (mm)
600	600
450	600
400	600
300	450
200	300

1. Additional anchors 100mm maximum from track ends.
2. 150mm studs require 2 anchors across width.

> Noggings are permitted to assist the fixing of services. Copper Chromium Arsenate (CCA) treated timber must not be used.

> Plumbing and electrical services must not protrude beyond the face of the studs.

Siniat Internal Wind Load Calculator

Refer to Section 2.3 for assistance determining the relevant internal wind pressures for a specific project. Or use the Siniat Internal Wind Load Calculator by clicking on the link or by using your phone's camera on the QR code.

Table 2 Internal Non-Load Bearing Steel Stud Wall Height Table (mm) - REGION A

Refer to Section 2.3 for assistance determining the relevant wind pressures for a specific project.

Steel stud walls lined full height on both sides		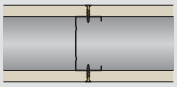		Up to BCA Building Importance Level 3	Ultimate pressure W_U (kPa)		0.39
					Serviceability pressure W_S (kPa)		0.25
Stud Depth and BMT (mm)	**Maximum Stud Centres (mm)**	Deflection limited to H/240 or 30mm max Untiled plasterboard wall lining			Deflection limited to H/360, or 20mm max Any tiled wall, or untiled fibre cement wall lining		
		10mm	**13mm**	**16mm**	**10mm**	**13mm**	**16mm**
51 x 0.5	600	2740	2840	2980	2310	2380	2490
	450	3070	3190	3340	2580	2670	2780
	400	3210	3340	3510	2700	2790	2910
	300	3580	3730	3930	3010	3120	3260
64 x 0.5	600	3330	3440	3580	2790	2870	2970
	450	3730	3870	4040	3130	3220	3340
	400	3900	4050	4240	3270	3380	3500
	300	4310	4500	4730	3640	3770	3930
64 x 0.75	600	3670	3770	3900	3100	3170	3260
	450	4080	4220	4380	3450	3540	3650
	400	4260	4410	4580	3610	3710	3820
	300	4690	4870	5080	4000	4120	4260
64 x 1.15	600	4090	4190	4310	3480	3550	3630
	450	4540	4660	4810	3870	3950	4050
	400	4720	4860	5020	4030	4120	4230
	300	5190	5350	5550	4450	4560	4700
76 x 0.55	600	3970	4100	4260	3330	3410	3520
	450	4430	4600	4790	3720	3830	3960
	400	4620	4800	5010	3890	4010	4150
	300	5070	5290 (0.7)	5550 (0.7)	4300	4460	4640
76 x 0.75	600	4310	4430	4570	3640	3720	3810
	450	4780	4940	5120	4050	4150	4280
	400	4980	5150	5350	4220	4340	4470
	300	5450	5660	5900	4660	4800	4970
76 x 1.15	600	4750	4870	5000	4040	4120	4210
	450	5250	5400	5570	4480	4580	4690
	400	5460	5620	5810	4660	4770	4900
	300	5970	6160	6390	5130	5260	5420
92 x 0.55	600	4740	4900	4950	3970	4070	4190
	450	5250 (0.7)	5460 (0.7)	5690 (0.7)	4420	4560	4720
	400	5460 (0.7)	5680 (0.7)	5940 (0.7)	4610	4760	4940
	300	5950 (0.7)	6210 (0.7)	6520 (0.7)	5060	5250 (0.7)	5470 (0.7)
92 x 0.75	600	5060	5220	5390	4270	4370	4480
	450	5590	5780	6010	4740	4870	5020
	400	5800	6010	6260	4930	5080	5250
	300	6320	6560	6860	5410	5590	5800
92 x 1.15	600	5590	5740	5910	4760	4850	4960
	450	6150	6330	6550	5260	5380	5530
	400	6380	6580	6810	5460	5600	5760
	300	6940	7170	7370	5980	6140	6340
150 x 0.75	600	7580	7580	7580	6600	6800	7030
	450	8060 (1.15)	8280 (1.15)	8540 (1.15)	7200	7380	7570
	400	8240 (1.15)	8480 (1.15)	8740 (1.15)	7380	7560	7770
	300	8700 (1.15)	8940 (1.15)	9230 (1.15)	7800	7990	8240 (1.15)
150 x 1.15	600	8100	8280	8470	7230	7370	7520
	450	8600	8790	9020	7700	7860	8040
	400	8800	9010	9240	7900	8060	8250
	300	9310	9520	9770	8370	8550	8750

Nogging Table

Wall Height (mm)	No. of Noggings evenly spaced
0 - 4400	0
4400 - 8800	1
8800 - 9770	2

Concrete Anchor Table

Wall Height (mm)	Anchor
0 - 9770	SA6x45

1. Concrete 20 MPa minimum. No edge / spacing effects.
2. Anchors at maximum 1.5 x stud spacing up to 600mm maximum, and also 100mm maximum from track ends.
3. 150mm studs require 2 anchors across width.

1. Maximum wall heights based upon lateral pressures and the deflection limits stated. Not for external walls.
2. Wall heights include self weight but are not applicable to axially loaded (load bearing) studs. Point loads and other loads such as shelf loads or live loads are not considered, and must be checked with Siniat.
3. Base and head track must be similar Base Metal Thickness (BMT) as the stud. The head track BMT is stated in brackets next to wall height if a different BMT compared to the stud is required.
4. Connections to base track and head track checked. Head track checked with a maximum 20mm overlap length of the stud to DH-Track (max 20mm downward and 10mm upwards overhead soffit deflection).
5. Contact Siniat or a structural engineer to check walls for earthquake actions or any imposed ceiling loads during an earthquake. Specific project information is required.
6. Table refers to Siniat steel studs of grade G300 steel with Zincalume™ AM150 or AM125 corrosion protection. Maximum production lengths available are 7.2m
7. Designed in accordance with *AS/NZS 4600:2018 Cold Formed Steel Structures*.
8. Wind pressures determined in accordance with *AS/NZS 1170.2 Wind Actions*.
9. Serviceability wind pressure taken as 65% of ultimate, and serviceability deflection limited to either height/240 or height/360.
10. The nominated lateral pressures and deflection limits must be checked for suitability for a specific project.
11. For BCA Building Importance Level 4, please contact Siniat or refer to the Framing Tables Supplement.

Table 3 Internal Non-Load Bearing Steel Stud Wall Height Table (mm) - REGION A

Refer to Section 2.3 for assistance determining the relevant wind pressures for a specific project.

Steel stud walls lined full height on both sides	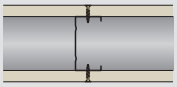	Up to BCA Building Importance Level 3	Ultimate pressure W_U (kPa)	0.54
			Serviceability pressure W_S (kPa)	0.35

Stud Depth and BMT (mm)	Maximum Stud Centres (mm)	Deflection limited to H/240 or 30mm max Untiled plasterboard wall lining			Deflection limited to H/360, or 20mm max Any tiled wall, or untiled fibre cement wall lining		
		10mm	13mm	16mm	10mm	13mm	16mm
51 x 0.5	600	2370	2450	2560	2010	2070	2160
	450	2660	2750	2860	2250	2310	2400
	400	2780	2880	3000	2350	2420	2510
	300	3100	3220	3360	2620	2700	2800
64 x 0.5	600	2850	2850	2850	2420	2480	2560
	450	3220	3320	3450	2710	2780	2870
	400	3370	3480	3620	2840	2910	3010
	300	3660	3880 (0.7)	4050 (0.7)	3160	3260	3370
64 x 0.75	600	3190	3260	3360	2700	2760	2820
	450	3550	3650	3760	3010	3080	3160
	400	3710	3820	3940	3150	3220	3300
	300	4110	4240	4390	3500	3580	3690
64 x 1.15	600	3580	3650	3730	3050	3100	3160
	450	3970	4060	4170	3390	3450	3520
	400	4140	4240	4360	3540	3600	3680
	300	4570	4690	4830	3910	4000	4100
76 x 0.55	600	3430	3520	3580	2890	2950	3030
	450	3830 (0.7)	3950 (0.7)	4090 (0.7)	3230	3310	3400
	400	4010 (0.7)	4140 (0.7)	4290 (0.7)	3380	3460	3570
	300	4430 (0.7)	4590 (0.7)	4780 (0.7)	3660	3860 (0.7)	3990 (0.7)
76 x 0.75	600	3740	3830	3930	3170	3230	3300
	450	4170	4280	4410	3530	3610	3690
	400	4340	4470	4610	3690	3770	3870
	300	4780	4940	5120	4080	4190	4310
76 x 1.15	600	4150	4230	4330	3540	3590	3660
	450	4600	4710	4830	3930	4000	4080
	400	4790	4910	5050	4100	4170	4270
	300	5260	5410	5580	4520	4620	4730
92 x 0.55	600	3580	3580	3580	3430	3510	3580
	450	4550 (0.7)	4700 (0.7)	4770 (0.7)	3840 (0.7)	3930 (0.7)	4040 (0.7)
	400	4740 (0.7)	4910 (0.7)	5090 (0.7)	4010 (0.7)	4110 (0.7)	4240 (0.7)
	300	5210 (0.7)	5410 (0.7)	5640 (0.7)	4430 (0.7)	4560 (0.7)	4720 (0.7)
92 x 0.75	600	4390	4500	4620	3710	3780	3860
	450	4870	5010	5180	4130	4230	4330
	400	5070	5230	5410	4310	4410	4530
	300	5550	5740	5970 (1.15)	4750	4880	5030
92 x 1.15	600	4890	4990	5110	4170	4230	4310
	450	5400	5530	5690	4610	4700	4800
	400	5610	5760	5930	4800	4900	5020
	300	6130	6310	6510	5280	5400	5540
150 x 0.75	600	5470	5470	5470	5470	5470	5470
	450	7300 (1.15)	7300 (1.15)	7300 (1.15)	6320 (1.15)	6500 (1.15)	6710 (1.15)
	400	7520 (1.15)	7710 (1.15)	7930 (1.15)	6550 (1.15)	6750 (1.15)	6980 (1.15)
	300	7950 (1.15)	8160 (1.15)	8400 (1.15)	7110 (1.15)	7300 (1.15)	7490 (1.15)
150 x 1.15	600	7370	7520	7670	6360	6500	6650
	450	7850	8010	8200	6970	7140	7300
	400	8040	8210	8410	7210	7350	7500
	300	8530	8710	8920	7660	7810	7980

Nogging Table

Wall Height (mm)	No. of Noggings evenly spaced
0 - 4400	0
4400 - 8800	1
8800 - 8920	2

Concrete Anchor Table

Wall Height (mm)	Anchor
0 - 8920	SA6x45

1. Concrete 20 MPa minimum. No edge / spacing effects.
2. Anchors at maximum 1.5 x stud spacing up to 600mm maximum, and also 100mm maximum from track ends.
3. 150mm studs require 2 anchors across width.

1. Maximum wall heights based upon lateral pressures and the deflection limits stated. Not for external walls.
2. Wall heights include self weight but are not applicable to axially loaded (load bearing) studs. Point loads and other loads such as shelf loads or live loads are not considered, and must be checked with Siniat.
3. Base and head track must be similar Base Metal Thickness (BMT) as the stud. The head track BMT is stated in brackets next to wall height if a different BMT compared to the stud is required.
4. Connections to base track and head track checked. Head track checked with a maximum 20mm overlap length of the stud to DH-Track (max 20mm downward and 10mm upwards overhead soffit deflection).
5. Contact Siniat or a structural engineer to check walls for earthquake actions or any imposed ceiling loads during an earthquake. Specific project information is required.
6. Table refers to Siniat steel studs of grade G300 steel with Zincalume™ AM150 or AM125 corrosion protection. Maximum production lengths available are 7.2m
7. Designed in accordance with *AS/NZS 4600:2018 Cold Formed Steel Structures.*
8. Wind pressures determined in accordance with *AS/NZS 1170.2 Wind Actions.*
9. Serviceability wind pressure taken as 65% of ultimate, and serviceability deflection limited to either height/240 or height/360.
10. The nominated lateral pressures and deflection limits must be checked for suitability for a specific project.
11. For BCA Building Importance Level 4, please contact Siniat or refer to the Framing Tables Supplement.

Table 4 Internal Non-Load Bearing Steel Stud Wall Height Table (mm) - REGION A

Refer to Section 2.3 for assistance determining the relevant wind pressures for a specific project.

Steel stud walls lined full height on both sides		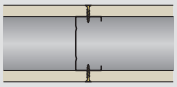		Up to BCA Building Importance Level 3	Ultimate pressure W_U (kPa)		0.70
					Serviceability pressure W_S (kPa)		0.45
Stud Depth and BMT (mm)	**Maximum Stud Centres (mm)**	Deflection limited to H/240 or 30mm max Untiled plasterboard wall lining			Deflection limited to H/360, or 20mm max Any tiled wall, or untiled fibre cement wall lining		
		10mm	**13mm**	**16mm**	**10mm**	**13mm**	**16mm**
51 x 0.5	600	2140	2210	2270	1820	1870	1950
	450	2390	2460	2560	2030	2080	2160
	400	2500	2580	2680	2120	2180	2250
	300	2790	2820	3000 (0.7)	2370	2430	2510
64 x 0.5	600	2200	2200	2200	2190	2200	2200
	450	2890 (0.7)	2930 (0.7)	2930 (0.7)	2440	2500	2570
	400	3030 (0.7)	3110 (0.7)	3220 (0.7)	2560	2620	2690
	300	3370 (0.7)	3480 (0.7)	3610 (0.7)	2850 (0.7)	2930 (0.7)	3010 (0.7)
64 x 0.75	600	2880	2940	3010	2450	2490	2550
	450	3210	3280	3370	2730	2780	2840
	400	3350	3430	3530	2850	2900	2970
	300	3720	3820	3940	3170	3240	3320
64 x 1.15	600	3240	3300	3370	2770	2810	2860
	450	3600	3670	3750	3080	3130	3180
	400	3760	3830	3920	3210	3270	3330
	300	4150	4250	4360	3560	3620	3700
76 x 0.55	600	2760	2760	2760	2600	2650	2710
	450	3450 (0.7)	3540 (0.7)	3640 (0.7)	2910 (0.7)	2970 (0.7)	3040 (0.7)
	400	3600 (0.7)	3700 (0.7)	3820 (0.7)	3040 (0.7)	3110 (0.7)	3190 (0.7)
	300	3990 (0.7)	4120 (0.7)	4270 (0.7)	3390 (0.7)	3470 (0.7)	3570 (0.7)
76 x 0.75	600	3370	3440	3520	2870	2910	2970
	450	3760	3850	3950	3190	3250	3320
	400	3920	4020	4130	3340	3400	3480
	300	4330	4450	4600 (1.15)	3700	3780	3880
76 x 1.15	600	3760	3820	3900	3210	3250	3310
	450	4170	4250	4350	3570	3620	3680
	400	4350	4440	4550	3720	3780	3850
	300	4790	4900	5040	4110	4190	4280
92 x 0.55	600	2760	2760	2760	2760	2760	2760
	450	3680 (0.7)	3680 (0.7)	3680 (0.7)	3450 (0.7)	3530 (0.7)	3610 (0.7)
	400	4140 (0.7)	4140 (0.7)	4140 (0.7)	3610 (0.7)	3690 (0.7)	3790 (0.7)
	300	4450 (0.7)	4450 (0.7)	4450 (0.7)	4000 (0.7)	4110 (0.7)	4230 (0.7)
92 x 0.75	600	3960	4040	4130	3350	3410	3470
	450	4400	4450	4630 (1.15)	3730	3810	3890
	400	4580 (1.15)	4710 (1.15)	4850 (1.15)	3900	3980	4070
	300	5040 (1.15)	5190 (1.15)	5370 (1.15)	4310	4410	4530 (1.15)
92 x 1.15	600	4430	4510	4590	3780	3830	3890
	450	4900	5000	5120	4190	4260	4330
	400	5100	5210	5340	4360	4440	4530
	300	5590	5730	5900	4800	4900	5020
150 x 0.75	600	4220	4220	4220	4220	4220	4220
	450	5630 (1.15)	5630 (1.15)	5630 (1.15)	5630 (1.15)	5630 (1.15)	5630 (1.15)
	400	6330 (1.15)	6330 (1.15)	6330 (1.15)	5940 (1.15)	6100 (1.15)	6280 (1.15)
	300	7430 (1.15)	7620 (1.15)	7830 (1.15)	6470 (1.15)	6670 (1.15)	6890 (1.15)
150 x 1.15	600	6750	6920	7100	5770	5880	5990
	450	7330	7470	7630	6340	6480	6630
	400	7520	7670	7830	6580	6730	6900
	300	7980	8140	8330	7160	7300	7450

Nogging Table

Wall Height (mm)	No. of Noggings evenly spaced
0 - 4400	0
4400 - 8330	1

Concrete Anchor Table

Wall Height (mm)	Anchor
0 - 8330	SA6x45

1. Concrete 20 MPa minimum. No edge / spacing effects.
2. Anchors at maximum 1.5 x stud spacing up to 600mm maximum, and also 100mm maximum from track ends.
3. 150mm studs require 2 anchors across width.

1. Maximum wall heights based upon lateral pressures and the deflection limits stated. Not for external walls.
2. Wall heights include self weight but are not applicable to axially loaded (load bearing) studs. Point loads and other loads such as shelf loads or live loads are not considered, and must be checked with Siniat.
3. Base and head track must be similar Base Metal Thickness (BMT) as the stud. The head track BMT is stated in brackets next to wall height if a different BMT compared to the stud is required.
4. Connections to base track and head track checked. Head track checked with a maximum 20mm overlap length of the stud to DH-Track (max 20mm downward and 10mm upwards overhead soffit deflection).
5. Contact Siniat or a structural engineer to check walls for earthquake actions or any imposed ceiling loads during an earthquake. Specific project information is required.
6. Table refers to Siniat steel studs of grade G300 steel with Zincalume™ AM150 or AM125 corrosion protection. Maximum production lengths available are 7.2m
7. Designed in accordance with *AS/NZS 4600:2018 Cold Formed Steel Structures.*
8. Wind pressures determined in accordance with *AS/NZS 1170.2 Wind Actions.*
9. Serviceability wind pressure taken as 65% of ultimate, and serviceability deflection limited to either height/240 or height/360.
10. The nominated lateral pressures and deflection limits must be checked for suitability for a specific project.
11. For BCA Building Importance Level 4, please contact Siniat or refer to the Framing Tables Supplement.

Table 5 Internal Non-Load Bearing Steel Stud Wall Height Table (mm) - REGION B

Refer to Section 2.3 for assistance determining the relevant wind pressures for a specific project.

Steel stud walls lined full height on both sides	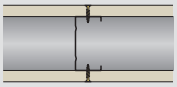	Up to BCA Building Importance Level 3	Ultimate pressure W_U (kPa)	0.59
			Serviceability pressure W_S (kPa)	0.25

Stud Depth and BMT (mm)	Maximum Stud Centres (mm)	Deflection limited to H/240 or 30mm max Untiled plasterboard wall lining			Deflection limited to H/360, or 20mm max Any tiled wall, or untiled fibre cement wall lining		
		10mm	13mm	16mm	10mm	13mm	16mm
51 x 0.5	600	2690	2690	2690	2310	2380	2490
	450	3070	3190	3340	2580	2670	2780
	400	3210	3310	3510 (0.7)	2700	2790	2910
	300	3350	3730 (0.7)	3930 (0.7)	3010	3120	3260
64 x 0.5	600	2610	2610	2610	2610	2610	2610
	450	3480 (0.7)	3480 (0.7)	3480 (0.7)	3130	3220	3340
	400	3900 (0.7)	3910 (0.7)	3910 (0.7)	3270	3380 (0.7)	3500 (0.7)
	300	4310 (0.7)	4500 (0.7)	4730 (0.7)	3640 (0.7)	3770 (0.7)	3930 (0.7)
64 x 0.75	600	3670	3770	3900	3100	3170	3260
	450	4080	4220	4380	3450	3540	3650
	400	4260	4410	4580	3610	3710	3820
	300	4690	4870	5080	4000	4120	4260
64 x 1.15	600	4090	4190	4310	3480	3550	3630
	450	4540	4660	4810	3870	3950	4050
	400	4720	4860	5020	4030	4120	4230
	300	5190	5350	5550	4450	4560	4700
76 x 0.55	600	3070	3070	3070	3070	3070	3070
	450	4100 (0.7)	4100 (0.7)	4100 (0.7)	3720 (0.7)	3830 (0.7)	3960 (0.7)
	400	4610 (0.7)	4610 (0.7)	4610 (0.7)	3890 (0.7)	4010 (0.7)	4150 (0.7)
	300	5070 (0.7)	5290 (1.15)	5550 (1.15)	4300 (0.7)	4460 (0.7)	4640 (0.7)
76 x 0.75	600	4310	4430	4570	3640	3720	3810
	450	4780	4940	5120	4050	4150	4280
	400	4980	5150	5280	4220	4340	4470
	300	5450 (1.15)	5660 (1.15)	5900 (1.15)	4660	4800	4970
76 x 1.15	600	4750	4870	5000	4040	4120	4210
	450	5250	5400	5570	4480	4580	4690
	400	5460	5620	5810	4660	4770	4900
	300	5970	6160	6390	5130	5260	5420
92 x 0.55	600	3120	3120	3120	3120	3120	3120
	450	4160 (0.7)	4160 (0.7)	4160 (0.7)	4160 (0.7)	4160 (0.7)	4160 (0.7)
	400	4680 (0.7)	4680 (0.7)	4680 (0.7)	4610 (0.7)	4680 (0.7)	4680 (0.7)
	300	5280 (0.7)	5280 (0.7)	5280 (0.7)	5060 (0.7)	5250 (0.7)	5280 (0.7)
92 x 0.75	600	5060	5220	5390 (1.15)	4270	4370	4480
	450	5590 (1.15)	5780 (1.15)	6010 (1.15)	4740	4870	5020
	400	5800 (1.15)	6010 (1.15)	6260 (1.15)	4930	5080	5250
	300	6320 (1.15)	6560 (1.15)	6860 (1.15)	5410 (1.15)	5590 (1.15)	5800 (1.15)
92 x 1.15	600	5590	5740	5910	4760	4850	4960
	450	6150	6330	6550	5260	5380	5530
	400	6380	6580	6810	5460	5600	5760
	300	6940	7170	7370	5980	6140	6340
150 x 0.75	600	5010	5010	5010	5010	5010	5010
	450	6680 (1.15)	6680 (1.15)	6680 (1.15)	6680 (1.15)	6680 (1.15)	6680 (1.15)
	400	7510 (1.15)	7510 (1.15)	7510 (1.15)	7380 (1.15)	7510 (1.15)	7510 (1.15)
	300	8700 (1.15)	8940 (1.15)	9230 (1.15)	7800 (1.15)	8010 (1.15)	8240 (1.15)
150 x 1.15	600	8100	8280	8470	7230	7370	7520
	450	8600	8790	9020	7700	7860	8040
	400	8800	9010	9240	7900	8060	8250
	300	9310	9520	9770	8370	8550	8750

Nogging Table

Wall Height (mm)	No. of Noggings evenly spaced
0 - 4400	0
4400 - 8800	1
8800 - 9770	2

Concrete Anchor Table

Wall Height (mm)	Anchor
0 - 9770	SA6x45

1. Concrete 20 MPa minimum. No edge / spacing effects.
2. Anchors at maximum 1.5 x stud spacing up to 600mm maximum, and also 100mm maximum from track ends.
3. 150mm studs require 2 anchors across width.

1. Maximum wall heights based upon lateral pressures and the deflection limits stated. Not for external walls.
2. Wall heights include self weight but are not applicable to axially loaded (load bearing) studs. Point loads and other loads such as shelf loads or live loads are not considered, and must be checked with Siniat.
3. Base and head track must be similar Base Metal Thickness (BMT) as the stud. The head track BMT is stated in brackets next to wall height if a different BMT compared to the stud is required.
4. Connections to base track and head track checked. Head track checked with a maximum 20mm overlap length of the stud to DH-Track (max 20mm downward and 10mm upwards overhead soffit deflection).
5. Contact Siniat or a structural engineer to check walls for earthquake actions or any imposed ceiling loads during an earthquake. Specific project information is required.
6. Table refers to Siniat steel studs of grade G300 steel with Zincalume™ AM150 or AM125 corrosion protection. Maximum production lengths available are 7.2m
7. Designed in accordance with *AS/NZS 4600:2018 Cold Formed Steel Structures.*
8. Wind pressures determined in accordance with *AS/NZS 1170.2 Wind Actions.*
9. Serviceability wind pressure taken as 42% of ultimate, and serviceability deflection limited to either height/240 or height/360.
10. The nominated lateral pressures and deflection limits must be checked for suitability for a specific project.
11. For BCA Building Importance Level 4, please contact Siniat or refer to the Framing Tables Supplement.

Table 6 Internal Non-Load Bearing Steel Stud Wall Height Table (mm) - REGION B

Refer to Section 2.3 for assistance determining the relevant wind pressures for a specific project.

Steel stud walls lined full height on both sides		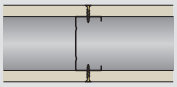		Up to BCA Building Importance Level 3	Ultimate pressure W_U (kPa)		0.83
					Serviceability pressure W_S (kPa)		0.35
Stud Depth and BMT (mm)	**Maximum Stud Centres (mm)**	Deflection limited to H/240 or 30mm max Untiled plasterboard wall lining			Deflection limited to H/360, or 20mm max Any tiled wall, or untiled fibre cement wall lining		
		10mm	**13mm**	**16mm**	**10mm**	**13mm**	**16mm**
51 x 0.5	600	1910	1910	1910	1910	1910	1910
	450	2550 (0.7)	2550 (0.7)	2550 (0.7)	2250	2310	2400 (0.7)
	400	2780 (0.7)	2870 (0.7)	2870 (0.7)	2350 (0.7)	2420 (0.7)	2510 (0.7)
	300	3100 (0.7)	3220 (0.7)	3360 (0.7)	2620 (0.7)	2700 (0.7)	2800 (0.7)
64 x 0.5	600	1850	1850	1850	1850	1850	1850
	450	2470 (0.7)	2470 (0.7)	2470 (0.7)	2470 (0.7)	2470 (0.7)	2470 (0.7)
	400	2780 (0.7)	2780 (0.7)	2780 (0.7)	2780 (0.7)	2780 (0.7)	2780 (0.7)
	300	3710 (0.7)	3710 (0.7)	3710 (0.7)	3160 (0.7)	3260 (0.7)	3370 (0.7)
64 x 0.75	600	3190	3260	3360	2700	2760	2820
	450	3550	3650	3760 (1.15)	3010	3080	3160
	400	3710	3820 (1.15)	3940 (1.15)	3150	3220	3300
	300	4110 (1.15)	4240 (1.15)	4390 (1.15)	3500	3580	3690
64 x 1.15	600	3580	3650	3730	3050	3100	3160
	450	3970	4060	4170	3390	3450	3520
	400	4140	4240	4360	3540	3600	3680
	300	4570	4690	4830	3910	4000	4100
76 x 0.55	600	2180	2180	2180	2180	2180	2180
	450	2910 (0.7)	2910 (0.7)	2910 (0.7)	2910 (0.7)	2910 (0.7)	2910 (0.7)
	400	3280 (0.7)	3280 (0.7)	3280 (0.7)	3280 (0.7)	3280 (0.7)	3280 (0.7)
	300	4370 (1.15)	4370 (1.15)	4370 (1.15)	3750 (1.15)	3860 (1.15)	3990 (1.15)
76 x 0.75	600	3740	3830 (1.15)	3930 (1.15)	3170	3230	3300
	450	4170 (1.15)	4280 (1.15)	4410 (1.15)	3530	3610	3690
	400	4340 (1.15)	4470 (1.15)	4610 (1.15)	3690	3770 (1.15)	3870 (1.15)
	300	4780 (1.15)	4940 (1.15)	5120 (1.15)	4080 (1.15)	4190 (1.15)	4310 (1.15)
76 x 1.15	600	4150	4230	4330	3540	3590	3660
	450	4600	4710	4830	3930	4000	4080
	400	4790	4910	5050	4100	4170	4270
	300	5260	5410	5580	4520	4620	4730
92 x 0.55	600	2220	2220	2220	2220	2220	2220
	450	2960 (0.7)	2960 (0.7)	2960 (0.7)	2960 (0.7)	2960 (0.7)	2960 (0.7)
	400	3330 (0.7)	3330 (0.7)	3330 (0.7)	3330 (0.7)	3330 (0.7)	3330 (0.7)
	300	4440 (1.15)	4440 (1.15)	4440 (1.15)	4430 (1.15)	4440 (1.15)	4440 (1.15)
92 x 0.75	600	3930 (1.15)	3930 (1.15)	3930 (1.15)	3710	3780 (1.15)	3860 (1.15)
	450	4870 (1.15)	5010 (1.15)	5180 (1.15)	4130 (1.15)	4230 (1.15)	4330 (1.15)
	400	5070 (1.15)	5230 (1.15)	5410 (1.15)	4310 (1.15)	4410 (1.15)	4530 (1.15)
	300	5550 (1.15)	5740 (1.15)	5970 (1.15)	4750 (1.15)	4880 (1.15)	5030 (1.15)
92 x 1.15	600	4890	4990	5110	4170	4230	4310
	450	5400	5530	5690	4610	4700	4800
	400	5610	5760	5930	4800	4900	5020
	300	6130	6310	6510	5280	5400	5540
150 x 0.75	600	3560	3560	3560	3560	3560	3560
	450	4740 (1.15)	4740 (1.15)	4740 (1.15)	4740 (1.15)	4740 (1.15)	4740 (1.15)
	400	5340 (1.15)	5340 (1.15)	5340 (1.15)	5340 (1.15)	5340 (1.15)	5340 (1.15)
	300	7120 (1.15)	7120 (1.15)	7120 (1.15)	7110 (1.15)	7120 (1.15)	7120 (1.15)
150 x 1.15	600	6210	6210	6210	6210	6210	6210
	450	7850	8010	8200	6970	7140	7300
	400	8040	8210	8410	7210	7350	7500
	300	8530	8710	8920	7660	7810	7980

Nogging Table

Wall Height (mm)	No. of Noggings evenly spaced
0 - 4400	0
4400 - 8800	1
8800 - 8920	2

Concrete Anchor Table

Wall Height (mm)	Anchor
0 - 8920	SA6x45

1. Concrete 20 MPa minimum. No edge / spacing effects.
2. Anchors at maximum 1.5 x stud spacing up to 600mm maximum, and also 100mm maximum from track ends.
3. 150mm studs require 2 anchors across width.

1. Maximum wall heights based upon lateral pressures and the deflection limits stated. Not for external walls.
2. Wall heights include self weight but are not applicable to axially loaded (load bearing) studs. Point loads and other loads such as shelf loads or live loads are not considered, and must be checked with Siniat.
3. Base and head track must be similar Base Metal Thickness (BMT) as the stud. The head track BMT is stated in brackets next to wall height if a different BMT compared to the stud is required.
4. Connections to base track and head track checked. Head track checked with a maximum 20mm overlap length of the stud to DH-Track (max 20mm downward and 10mm upwards overhead soffit deflection).
5. Contact Siniat or a structural engineer to check walls for earthquake actions or any imposed ceiling loads during an earthquake. Specific project information is required.
6. Table refers to Siniat steel studs of grade G300 steel with Zincalume™ AM150 or AM125 corrosion protection. Maximum production lengths available are 7.2m
7. Designed in accordance with *AS/NZS 4600:2018 Cold Formed Steel Structures*.
8. Wind pressures determined in accordance with *AS/NZS 1170.2 Wind Actions*.
9. Serviceability wind pressure taken as 42% of ultimate, and serviceability deflection limited to either height/240 or height/360.
10. The nominated lateral pressures and deflection limits must be checked for suitability for a specific project.
11. For BCA Building Importance Level 4, please contact Siniat or refer to the Framing Tables Supplement.

Table 7 Internal Non-Load Bearing Steel Stud Wall Height Table (mm) - REGION B

Refer to Section 2.3 for assistance determining the relevant wind pressures for a specific project.

Steel stud walls lined full height on both sides	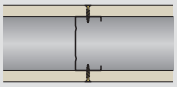	Up to BCA Building Importance Level 3	Ultimate pressure W_U (kPa)	1.07
			Serviceability pressure W_S (kPa)	0.45

Stud Depth and BMT (mm)	Maximum Stud Centres (mm)	Deflection limited to H/240 or 30mm max Untiled plasterboard wall lining			Deflection limited to H/360, or 20mm max Any tiled wall, or untiled fibre cement wall lining		
		10mm	13mm	16mm	10mm	13mm	16mm
51 x 0.5	600	1480	1480	1480	1480	1480	1480
	450	1980 (0.7)	1980 (0.7)	1980 (0.7)	1980 (0.7)	1980 (0.7)	1980 (0.7)
	400	2220 (0.7)	2220 (0.7)	2220 (0.7)	2120 (0.7)	2180 (0.7)	2220 (0.7)
	300	2790 (0.7)	2890 (0.7)	2970 (1.15)	2370 (0.7)	2430 (0.7)	2510 (0.7)
64 x 0.5	600	1430	1430	1430	1430	1430	1430
	450	1910 (0.7)	1910 (0.7)	1910 (0.7)	1910 (0.7)	1910 (0.7)	1910 (0.7)
	400	2150 (0.7)	2150 (0.7)	2150 (0.7)	2150 (0.7)	2150 (0.7)	2150 (0.7)
	300	2870 (0.7)	2870 (0.7)	2870 (0.7)	2850 (0.7)	2870 (0.7)	2870 (0.7)
64 x 0.75	600	2880	2940 (1.15)	3010 (1.15)	2450	2490	2550
	450	3210 (1.15)	3280 (1.15)	3370 (1.15)	2730	2780	2840
	400	3350 (1.15)	3430 (1.15)	3530 (1.15)	2850	2900 (1.15)	2970 (1.15)
	300	3720 (1.15)	3820 (1.15)	3940 (1.15)	3170 (1.15)	3240 (1.15)	3320 (1.15)
64 x 1.15	600	3240	3300	3370	2770	2810	2860
	450	3600	3670	3750	3080	3130	3180
	400	3760	3830	3920	3210	3270	3330
	300	4150	4250	4360	3560	3620	3700
76 x 0.55	600	1690	1690	1690	1690	1690	1690
	450	2260 (0.7)	2260 (0.7)	2260 (0.7)	2260 (0.7)	2260 (0.7)	2260 (0.7)
	400	2540 (0.7)	2540 (0.7)	2540 (0.7)	2540 (0.7)	2540 (0.7)	2540 (0.7)
	300	3390 (1.15)	3390 (1.15)	3390 (1.15)	3390 (1.15)	3390 (1.15)	3390 (1.15)
76 x 0.75	600	3050 (1.15)	3050 (1.15)	3050 (1.15)	2870	2910 (1.15)	2970 (1.15)
	450	3760 (1.15)	3850 (1.15)	3950 (1.15)	3190 (1.15)	3250 (1.15)	3320 (1.15)
	400	3920 (1.15)	4020 (1.15)	4130 (1.15)	3340 (1.15)	3400 (1.15)	3480 (1.15)
	300	4330 (1.15)	4460 (1.15)	4600 (1.15)	3700 (1.15)	3780 (1.15)	3880 (1.15)
76 x 1.15	600	3760	3820	3900	3210	3250	3310
	450	4170	4250	4350	3570	3620	3680
	400	4350	4440	4550	3720	3780	3850
	300	4790	4900	5040	4110	4190	4280
92 x 0.55	600	1720	1720	1720	1720	1720	1720
	450	2290 (0.7)	2290 (0.7)	2290 (0.7)	2290 (0.7)	2290 (0.7)	2290 (0.7)
	400	2580 (0.7)	2580 (0.7)	2580 (0.7)	2580 (0.7)	2580 (0.7)	2580 (0.7)
	300	3440 (1.15)	3440 (1.15)	3440 (1.15)	3440 (1.15)	3440 (1.15)	3440 (1.15)
92 x 0.75	600	3050 (1.15)	3050 (1.15)	3050 (1.15)	3050 (1.15)	3050 (1.15)	3050 (1.15)
	450	4070 (1.15)	4070 (1.15)	4070 (1.15)	3730 (1.15)	3810 (1.15)	3890 (1.15)
	400	4570 (1.15)	4570 (1.15)	4570 (1.15)	3900 (1.15)	3980 (1.15)	4070 (1.15)
	300	5040 (1.15)	5190 (1.15)	5370 (1.15)	4310 (1.15)	4410 (1.15)	4530 (1.15)
92 x 1.15	600	4430	4510	4590	3780	3830	3890
	450	4900	5000	5120	4190	4260	4330
	400	5100	5210	5340	4360	4440	4530
	300	5590	5730	5900	4800	4900	5020
150 x 0.75	600	2760	2760	2760	2760	2760	2760
	450	3680 (1.15)	3680 (1.15)	3680 (1.15)	3680 (1.15)	3680 (1.15)	3680 (1.15)
	400	4140 (1.15)	4140 (1.15)	4140 (1.15)	4140 (1.15)	4140 (1.15)	4140 (1.15)
	300	5520 (1.15)	5520 (1.15)	5520 (1.15)	5520 (1.15)	5520 (1.15)	5520 (1.15)
150 x 1.15	600	4820	4820	4820	4820	4820	4820
	450	6420	6420	6420	6340	6420	6420
	400	7230	7230	7230	6580	6730	6900
	300	7250	7250	7250	7160	7250	7250

Nogging Table

Wall Height (mm)	No. of Noggings evenly spaced
0 - 4400	0
4400 - 7250	1

Concrete Anchor Table

Wall Height (mm)	Anchor
0 - 7250	SA6x60

1. Concrete 20 MPa minimum. No edge / spacing effects.
2. Anchors at maximum 1.5 x stud spacing up to 600mm maximum, and also 100mm maximum from track ends.
3. 150mm studs require 2 anchors across width.

1. Maximum wall heights based upon lateral pressures and the deflection limits stated. Not for external walls.
2. Wall heights include self weight but are not applicable to axially loaded (load bearing) studs. Point loads and other loads such as shelf loads or live loads are not considered, and must be checked with Siniat.
3. Base and head track must be similar Base Metal Thickness (BMT) as the stud. The head track BMT is stated in brackets next to wall height if a different BMT compared to the stud is required.
4. Connections to base track and head track checked. Head track checked with a maximum 20mm overlap length of the stud to DH-Track (max 20mm downward and 10mm upwards overhead soffit deflection).
5. Contact Siniat or a structural engineer to check walls for earthquake actions or any imposed ceiling loads during an earthquake. Specific project information is required.
6. Table refers to Siniat steel studs of grade G300 steel with Zincalume™ AM150 or AM125 corrosion protection. Maximum production lengths available are 7.2m
7. Designed in accordance with *AS/NZS 4600:2018 Cold Formed Steel Structures.*
8. Wind pressures determined in accordance with *AS/NZS 1170.2 Wind Actions.*
9. Serviceability wind pressure taken as 42% of ultimate, and serviceability deflection limited to either height/240 or height/360.
10. The nominated lateral pressures and deflection limits must be checked for suitability for a specific project.
11. For BCA Building Importance Level 4, please contact Siniat or refer to the Framing Tables Supplement.

Table 8 Internal Non-Load Bearing Steel Stud Wall Height Table (mm) - REGION A

Refer to Section 2.3 for assistance determining the relevant wind pressures for a specific project.

Steel stud walls lined full height on one side only	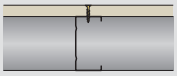	Up to BCA Building Importance Level 3	Ultimate pressure W_U (kPa)	0.39
			Serviceability pressure W_S (kPa)	0.25

Stud Depth and BMT (mm)	Maximum Stud Centres (mm)	Deflection limited to H/240 or 30mm max Untiled plasterboard wall lining			Deflection limited to H/360, or 20mm max Any tiled wall, or untiled fibre cement wall lining		
		10mm	13mm	16mm	10mm	13mm	16mm
51 x 0.5	600	2480	2520	2580	2130	2170	2220
	450	2750	2800	2860	2360	2400	2450
	400	2860	2920	2980	2460	2500	2550
	300	3170	3230	3300	2730	2770	2830
64 x 0.5	600	2960	2990	2990	2540	2580	2620
	450	3280	3330	3390	2820	2860	2900
	400	3420	3470	3540	2940	2980	3030
	300	3780	3840	3920	3250	3300	3360
64 x 0.75	600	3330	3370	3420	2870	2900	2940
	450	3690	3740	3800	3180	3210	3260
	400	3840	3900	3960	3310	3350	3400
	300	4240	4300	4380	3660	3710	3760
64 x 1.15	600	3790	3830	3880	3270	3300	3340
	450	4190	4240	4290	3620	3650	3690
	400	4360	4410	4470	3770	3810	3850
	300	4800	4860	4940	4160	4200	4260
76 x 0.55	600	3490	3490	3490	3010	3040	3080
	450	3870	3930	3990	3330	3370	3420
	400	4030	4090	4160	3470	3520	3570
	300	4450	4520 (0.7)	4600 (0.7)	3840	3890	3950
76 x 0.75	600	3880	3930	3980	3350	3380	3420
	450	4290	4350	4410	3700	3740	3790
	400	4470	4530	4600	3860	3900	3950
	300	4920	4990	5080	4250	4310	4370
76 x 1.15	600	4370	4420	4470	3780	3810	3840
	450	4820	4880	4950	4170	4210	4260
	400	5020	5080	5150	4340	4380	4430
	300	5510	5590	5680	4780	4830	4900
92 x 0.55	600	4050	4050	4050	3540	3580	3620
	450	4560 (0.7)	4560 (0.7)	4560 (0.7)	3920	3970	4020
	400	4750 (0.7)	4780 (0.7)	4780 (0.7)	4090	4140	4200
	300	5220 (0.7)	5310 (0.7)	5320 (0.7)	4500 (0.7)	4570 (0.7)	4640 (0.7)
92 x 0.75	600	4500	4560	4610	3880	3910	3960
	450	4970	5040	5110	4290	4330	4390
	400	5170	5240	5330	4460	4520	4570
	300	5680	5770	5870	4910	4980	5050
92 x 1.15	600	5110	5160	5220	4410	4450	4490
	450	5630	5700	5770	4870	4910	4970
	400	5850	5920	6010	5060	5120	5180
	300	6410	6500	6610	5560	5630	5700
150 x 0.75	600	5680	5680	5680	5680	5680	5680
	450	6600	6600	6600	6430	6520	6600
	400	6860	6860	6860	6680	6770	6860
	300	7490 (1.15)	7490 (1.15)	7490 (1.15)	7270 (1.15)	7350 (1.15)	7440 (1.15)
150 x 1.15	600	7340	7340	7340	6610	6680	6760
	450	8050	8130	8220	7240	7310	7380
	400	8270	8350	8450	7450	7510	7590
	300	8830	8920	9020	7960	8030	8120

Nogging Table

Wall Height (mm)	No. of Noggings evenly spaced
0 - 3000	1 plus soffit nogging
3000 - 6000	2 plus soffit nogging
6000 - 8000	3 plus soffit nogging
8000 - 9020	4 plus soffit nogging

Concrete Anchor Table

Wall Height (mm)	Anchor
0 - 9020	SA6x45

1. Concrete 20 MPa minimum. No edge / spacing effects.
2. Anchors at maximum 1.5 x stud spacing up to 600mm maximum, and also 100mm maximum from track ends.
3. 150mm studs require 2 anchors across width.

Soffit Nogging

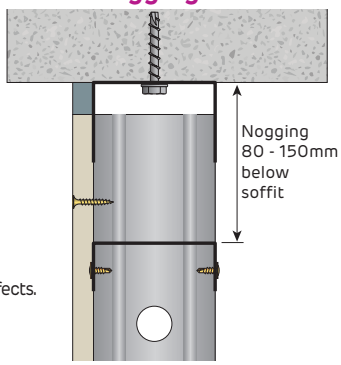

1. Stud frames lined on one side only (including double stud walls) must have an additional soffit nogging installed 80-150mm as shown, unless using a slotted deflection head track.
2. Maximum wall heights based upon lateral pressures and the deflection limits stated. Not for external walls.
3. Wall heights include self weight but are not applicable to axially loaded (load bearing) studs. Point loads and other loads such as shelf loads or live loads are not considered.
4. Base and head track must be similar Base Metal Thickness (BMT) as the stud. The head track BMT is stated in brackets next to wall height if a different BMT compared to the stud is required.
5. Connections to base track and head track checked. Head track checked with a maximum 20mm overlap length of the stud to DH-Track (max 20mm downward and 10mm upwards overhead soffit deflection). Screw fix base track to both sides of stud.
6. Contact Siniat or structural engineer to check walls for earthquake actions or any imposed ceiling loads during an earthquake. Specific project information is required.
7. Table refers to Siniat steel studs of grade G300 steel with Zincalume™ AM150 or AM125 corrosion protection. Maximum production lengths available are 7.2m
8. Calculations based upon a single span and designed in accordance with *AS/NZS 4600:2018 Cold Formed Steel Structures.*
9. Wind pressures determined in accordance with *AS/NZS 1170.2 Wind Actions.*
10. Serviceability taken as 65% of ultimate, deflection limited to either height/240 or height/360.
11. The nominated lateral pressures and deflection limits must be checked for suitability for a specific project.

Table 9 Internal Non-Load Bearing Steel Stud Wall Height Table (mm) - REGION A

Refer to Section 2.3 for assistance determining the relevant wind pressures for a specific project.

Steel stud walls lined full height on one side only		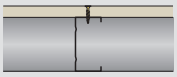		Up to BCA Building Importance Level 3	Ultimate pressure W_U (kPa)		0.46
					Serviceability pressure W_S (kPa)		0.3
Stud Depth and BMT (mm)	**Maximum Stud Centres (mm)**	Deflection limited to H/240 or 30mm max Untiled plasterboard wall lining			Deflection limited to H/360, or 20mm max Any tiled wall, or untiled fibre cement wall lining		
		10mm	**13mm**	**16mm**	**10mm**	**13mm**	**16mm**
51 x 0.5	600	2320	2360	2410	2000	2030	2070
	450	2570	2610	2670	2210	2240	2290
	400	2680	2720	2780	2300	2340	2380
	300	2960	3010	3080	2550	2590	2640
64 x 0.5	600	2760	2760	2760	2380	2410	2450
	450	3060	3110	3160	2640	2670	2710
	400	3200	3240	3300	2750	2780	2830
	300	3530	3590	3660	3040	3080	3130
64 x 0.75	600	3120	3150	3200	2690	2710	2750
	450	3450	3490	3540	2970	3000	3040
	400	3590	3640	3690	3100	3130	3170
	300	3970	4020	4090	3420	3470	3510
64 x 1.15	600	3550	3580	3620	3070	3090	3120
	450	3920	3960	4010	3390	3420	3450
	400	4080	4130	4180	3530	3560	3600
	300	4500	4550	4620	3890	3930	3980
76 x 0.55	600	3210	3210	3210	2810	2840	2880
	450	3620	3670	3710	3120	3150	3190
	400	3730	3820 (0.7)	3880 (0.7)	3250	3290	3330
	300	4160 (0.7)	4220 (0.7)	4290 (0.7)	3590	3640	3690
76 x 0.75	600	3630	3670	3720	3130	3160	3190
	450	4020	4060	4120	3460	3500	3540
	400	4180	4240	4300	3610	3650	3690
	300	4610	4670	4750	3980	4030	4080
76 x 1.15	600	4090	4130	4170	3540	3560	3590
	450	4520	4570	4620	3910	3940	3980
	400	4700	4760	4820	4070	4100	4150
	300	5170	5240	5310	4480	4530	4580
92 x 0.55	600	3730	3730	3730	3310	3340	3380
	450	4260 (0.7)	4260 (0.7)	4260 (0.7)	3670	3710	3750
	400	4440 (0.7)	4470 (0.7)	4470 (0.7)	3820 (0.7)	3870 (0.7)	3920 (0.7)
	300	4880 (0.7)	4960 (0.7)	5010 (0.7)	4220 (0.7)	4270 (0.7)	4330 (0.7)
92 x 0.75	600	4210	4250	4310	3630	3660	3690
	450	4650	4710	4770	4010	4050	4100
	400	4840	4900	4970	4180	4220	4270
	300	5320	5400	5490	4600	4660	4720
92 x 1.15	600	4780	4830	4880	4130	4160	4200
	450	5270	5330	5400	4560	4600	4650
	400	5480	5550	5620	4740	4790	4840
	300	6020	6090	6180	5220	5280	5340
150 x 0.75	600	5360	5360	5360	5360	5360	5360
	450	6230 (1.15)	6230 (1.15)	6230 (1.15)	6020	6100	6170 (1.15)
	400	6490 (1.15)	6490 (1.15)	6490 (1.15)	6260 (1.15)	6340 (1.15)	6420 (1.15)
	300	7130 (1.15)	7130 (1.15)	7130 (1.15)	6850 (1.15)	6950 (1.15)	7060 (1.15)
150 x 1.15	600	7030	7030	7030	6200	6260	6320
	450	7570	7570	7570	6810	6880	6970
	400	7800	7800	7800	7070	7150	7230
	300	8420	8510	8600	7590	7660	7740

Nogging Table

Wall Height (mm)	No. of Noggings evenly spaced
0 - 3000	1 plus soffit nogging
3000 - 6000	2 plus soffit nogging
6000 - 8000	3 plus soffit nogging
8000 - 8600	4 plus soffit nogging

Concrete Anchor Table

Wall Height (mm)	Anchor
0 - 8600	SA6x45

1. Concrete 20 MPa minimum. No edge / spacing effects.
2. Anchors at maximum 1.5 x stud spacing up to 600mm maximum, and also 100mm maximum from track ends.
3. 150mm studs require 2 anchors across width.

Soffit Nogging

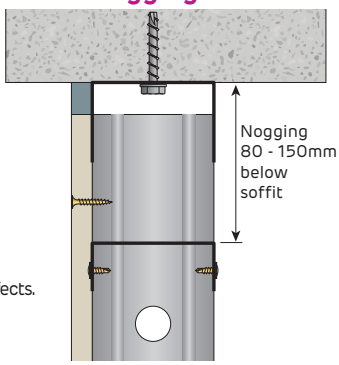

1. Stud frames lined on one side only (including double stud walls) must have an additional soffit nogging installed 80-150mm as shown, unless using a slotted deflection head track.
2. Maximum wall heights based upon lateral pressures and the deflection limits stated. Not for external walls.
3. Wall heights include self weight but are not applicable to axially loaded (load bearing) studs. Point loads and other loads such as shelf loads or live loads are not considered.
4. Base and head track must be similar Base Metal Thickness (BMT) as the stud. The head track BMT is stated in brackets next to wall height if a different BMT compared to the stud is required.
5. Connections to base track and head track checked. Head track checked with a maximum 20mm overlap length of the stud to DH-Track (max 20mm downward and 10mm upwards overhead soffit deflection). Screw fix base track to both sides of stud.
6. Contact Siniat or structural engineer to check walls for earthquake actions or any imposed ceiling loads during an earthquake. Specific project information is required.
7. Table refers to Siniat steel studs of grade G300 steel with Zincalume™ AM150 or AM125 corrosion protection. Maximum production lengths available are 7.2m
8. Calculations based upon a single span and designed in accordance with *AS/NZS 4600:2018 Cold Formed Steel Structures*.
9. Wind pressures determined in accordance with *AS/NZS 1170.2 Wind Actions*.
10. Serviceability taken as 65% of ultimate, deflection limited to either height/240 or height/360.
11. The nominated lateral pressures and deflection limits must be checked for suitability for a specific project.

Table 10 Internal Non-Load Bearing Steel Stud Wall Height Table (mm) - REGION A

Refer to Section 2.3 for assistance determining the relevant wind pressures for a specific project.

Steel stud walls lined full height on one side only		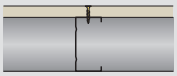		Up to BCA Building Importance Level 3	Ultimate pressure W_U (kPa)		0.54
					Serviceability pressure W_S (kPa)		0.35
Stud Depth and BMT (mm)	**Maximum Stud Centres (mm)**	Deflection limited to H/240 or 30mm max Untiled plasterboard wall lining			Deflection limited to H/360, or 20mm max Any tiled wall, or untiled fibre cement wall lining		
		10mm	**13mm**	**16mm**	**10mm**	**13mm**	**16mm**
51 x 0.5	600	2190	2220	2250	1890	1920	1960
	450	2420	2460	2510	2090	2120	2160
	400	2530	2570	2620	2180	2210	2250
	300	2800	2840	2900	2410	2440	2490
64 x 0.5	600	2540	2540	2540	2250	2270	2310
	450	2890	2930	2940	2490	2520	2560
	400	3020	3060	3110	2600	2630	2670
	300	3340 (0.7)	3390 (0.7)	3450 (0.7)	2880	2910	2950
64 x 0.75	600	2940	2980	3020	2540	2560	2600
	450	3260	3300	3340	2810	2840	2870
	400	3400	3440	3490	2930	2960	3000
	300	3750	3800	3860	3240	3270	3320
64 x 1.15	600	3360	3390	3420	2900	2920	2950
	450	3710	3750	3790	3210	3230	3270
	400	3860	3900	3950	3340	3370	3400
	300	4260	4310	4370	3690	3720	3760
76 x 0.55	600	2960	2960	2960	2660	2680	2720
	450	3420 (0.7)	3420 (0.7)	3420 (0.7)	2950	2980	3010
	400	3560 (0.7)	3610 (0.7)	3630 (0.7)	3070	3100	3140
	300	3930 (0.7)	3990 (0.7)	4050 (0.7)	3400 (0.7)	3430 (0.7)	3480 (0.7)
76 x 0.75	600	3430	3470	3510	2960	2980	3010
	450	3800	3840	3890	3280	3310	3340
	400	3950	4000	4050	3410	3450	3480
	300	4360	4420	4480	3770	3810	3860
76 x 1.15	600	3870	3900	3940	3350	3370	3400
	450	4280	4320	4360	3700	3730	3760
	400	4450	4500	4550	3850	3880	3920
	300	4900	4960	5020	4240	4280	4330
92 x 0.55	600	3390 (1.15)	3390 (1.15)	3390 (1.15)	3130	3160	3190
	450	3980 (1.15)	3980 (1.15)	3980 (1.15)	3470 (0.7)	3500 (0.7)	3540 (0.7)
	400	4190 (1.15)	4190 (1.15)	4190 (1.15)	3610 (0.7)	3650 (0.7)	3690 (0.7)
	300	4620 (1.15)	4690 (1.15)	4710 (1.15)	3990 (0.7)	4040 (0.7)	4090 (0.7)
92 x 0.75	600	3980	4020	4060	3430	3450	3490
	450	4400	4450	4500	3790	3830	3870
	400	4580	4630	4690	3950	3990	4030
	300	5030	5100	5180	4350	4400	4460
92 x 1.15	600	4520	4560	4610	3910	3930	3960
	450	4990	5040	5100	4320	4350	4390
	400	5190	5250	5310	4490	4530	4570
	300	5700	5770	5850	4940	4990	5050
150 x 0.75	600	5060	5060	5060	5060	5060	5060
	450	5610 (1.15)	5610 (1.15)	5610 (1.15)	5610 (1.15)	5610 (1.15)	5610 (1.15)
	400	6130 (1.15)	6130 (1.15)	6130 (1.15)	5830 (1.15)	5830 (1.15)	6070 (1.15)
	300	6770 (1.15)	6770 (1.15)	6770 (1.15)	6490 (1.15)	6580 (1.15)	6670 (1.15)
150 x 1.15	600	6730	6730	6730	5860	5910	5970
	450	7270	7270	7270	6450	6510	6590
	400	7490	7490	7490	6700	6770	6850
	300	8060	8060	8060	7300	7360	7430

Nogging Table

Wall Height (mm)	No. of Noggings evenly spaced
0 - 3000	1 plus soffit nogging
3000 - 6000	2 plus soffit nogging
6000 - 8060	3 plus soffit nogging

Concrete Anchor Table

Wall Height (mm)	Anchor
0 - 8060	SA6x45

1. Concrete 20 MPa minimum. No edge / spacing effects.
2. Anchors at maximum 1.5 x stud spacing up to 600mm maximum, and also 100mm maximum from track ends.
3. 150mm studs require 2 anchors across width.

Soffit Nogging

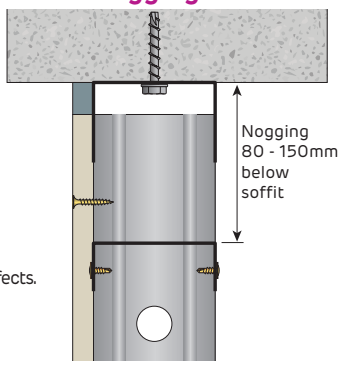

1. Stud frames lined on one side only (including double stud walls) must have an additional soffit nogging installed 80-150mm as shown, unless using a slotted deflection head track.
2. Maximum wall heights based upon lateral pressures and the deflection limits stated. Not for external walls.
3. Wall heights include self weight but are not applicable to axially loaded (load bearing) studs. Point loads and other loads such as shelf loads or live loads are not considered.
4. Base and head track must be similar Base Metal Thickness (BMT) as the stud. The head track BMT is stated in brackets next to wall height if a different BMT compared to the stud is required.
5. Connections to base track and head track checked. Head track checked with a maximum 20mm overlap length of the stud to DH-Track (max 20mm downward and 10mm upwards overhead soffit deflection). Screw fix base track to both sides of stud.
6. Contact Siniat or structural engineer to check walls for earthquake actions or any imposed ceiling loads during an earthquake. Specific project information is required.
7. Table refers to Siniat steel studs of grade G300 steel with Zincalume™ AM150 or AM125 corrosion protection. Maximum production lengths available are 7.2m
8. Calculations based upon a single span and designed in accordance with *AS/NZS 4600:2018 Cold Formed Steel Structures*.
9. Wind pressures determined in accordance with *AS/NZS 1170.2 Wind Actions*.
10. Serviceability taken as 65% of ultimate, deflection limited to either height/240 or height/360.
11. The nominated lateral pressures and deflection limits must be checked for suitability for a specific project.

Table 11 Internal Non-Load Bearing Steel Stud Wall Height Table (mm) - REGION B

Refer to Section 2.3 for assistance determining the relevant wind pressures for a specific project.

Steel stud walls lined full height on one side only	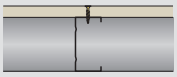	Up to BCA Building Importance Level 3	Ultimate pressure W_U (kPa)	0.59
			Serviceability pressure W_S (kPa)	0.25

Stud Depth and BMT (mm)	Maximum Stud Centres (mm)	Deflection limited to H/240 or 30mm max Untiled plasterboard wall lining			Deflection limited to H/360, or 20mm max Any tiled wall, or untiled fibre cement wall lining		
		10mm	13mm	16mm	10mm	13mm	16mm
51 x 0.5	600	2150	2150	2150	2130	2150	2150
	450	2480	2480	2480	2360	2400	2450
	400	2630	2630	2630	2460	2500	2550
	300	3040 (0.7)	3040 (0.7)	3040 (0.7)	2730	2770	2830
64 x 0.5	600	2430	2430	2430	2430	2430	2430
	450	2810	2810	2810	2810	2810	2810
	400	2980 (0.7)	2980 (0.7)	2980 (0.7)	2940 (0.7)	2980 (0.7)	2980 (0.7)
	300	3440 (0.7)	3440 (0.7)	3440 (0.7)	3250 (0.7)	3300 (0.7)	3360 (0.7)
64 x 0.75	600	3270	3270	3270	2870	2900	2940
	450	3690	3740	3770	3180	3210	3260
	400	3840	3900	3960	3310	3350	3400
	300	4240	4300	4380	3660	3710	3760
64 x 1.15	600	3790	3830	3880	3270	3300	3340
	450	4190	4240	4290	3620	3650	3690
	400	4360	4410	4470	3770	3810	3850
	300	4800	4860	4940	4160	4200	4260
76 x 0.55	600	2830	2830	2830	2830	2830	2830
	450	3270 (0.7)	3270 (0.7)	3270 (0.7)	3270 (0.7)	3270 (0.7)	3270 (0.7)
	400	3470 (0.7)	3470 (0.7)	3470 (0.7)	3470 (0.7)	3470 (0.7)	3470 (0.7)
	300	4010 (0.7)	4010 (0.7)	4010 (0.7)	3840 (0.7)	3890 (0.7)	3950 (0.7)
76 x 0.75	600	3680	3680	3680	3350	3380	3420
	450	4250	4250	4250	3700	3740	3790
	400	4470	4510	4510	3860	3900	3950
	300	4920 (1.15)	4990 (1.15)	5080 (1.15)	4250	4310	4370
76 x 1.15	600	4370	4420	4470	3780	3810	3840
	450	4820	4880	4950	4170	4210	4260
	400	5020	5080	5150	4340	4380	4430
	300	5510	5590	5680	4780	4830	4900
92 x 0.55	600	3100 (1.15)	3100 (1.15)	3100 (1.15)	3100 (1.15)	3100 (1.15)	3100 (1.15)
	450	3800 (1.15)	3800 (1.15)	3800 (1.15)	3800 (1.15)	3800 (1.15)	3800 (1.15)
	400	4030 (1.15)	4030 (1.15)	4030 (1.15)	4030 (1.15)	4030 (1.15)	4030 (1.15)
	300	4540 (1.15)	4540 (1.15)	4540 (1.15)	4500 (1.15)	4540 (1.15)	4540 (1.15)
92 x 0.75	600	4090	4090	4090	3880	3910	3960
	450	4710	4710	4710	4290	4330	4390
	400	4930 (1.15)	4930 (1.15)	4930 (1.15)	4460	4520	4570
	300	5440 (1.15)	5440 (1.15)	5440 (1.15)	4910 (1.15)	4980 (1.15)	5050 (1.15)
92 x 1.15	600	5030	5030	5030	4410	4450	4490
	450	5540	5540	5540	4870	4910	4970
	400	5750	5750	5750	5060	5120	5180
	300	6410	6500	6610	5560	5630	5700
150 x 0.75	600	4890 (1.15)	4890 (1.15)	4890 (1.15)	4890 (1.15)	4890 (1.15)	4890 (1.15)
	450	5440 (1.15)	5440 (1.15)	5440 (1.15)	5440 (1.15)	5440 (1.15)	5440 (1.15)
	400	5660 (1.15)	5660 (1.15)	5660 (1.15)	5660 (1.15)	5660 (1.15)	5660 (1.15)
	300	6580 (1.15)	6580 (1.15)	6580 (1.15)	6580 (1.15)	6580 (1.15)	6580 (1.15)
150 x 1.15	600	6560	6560	6560	6560	6560	6560
	450	7110	7110	7110	7110	7110	7110
	400	7330	7330	7330	7330	7330	7330
	300	7880	7880	7880	7880	7880	7880

Nogging Table

Wall Height (mm)	No. of Noggings evenly spaced
0 - 3000	1 plus soffit nogging
3000 - 6000	2 plus soffit nogging
6000 - 7880	3 plus soffit nogging

Concrete Anchor Table

Wall Height (mm)	Anchor
0 - 7880	SA6x45

1. Concrete 20 MPa minimum. No edge / spacing effects.
2. Anchors at maximum 1.5 x stud spacing up to 600mm maximum, and also 100mm maximum from track ends.
3. 150mm studs require 2 anchors across width.

Soffit Nogging

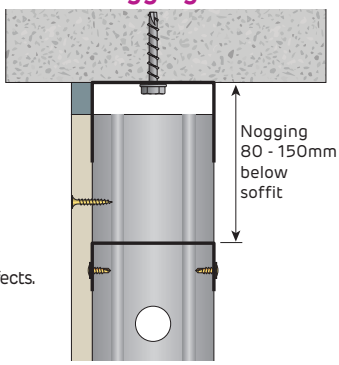

1. Stud frames lined on one side only (including double stud walls) must have an additional soffit nogging installed 80-150mm as shown, unless using a slotted deflection head track.
2. Maximum wall heights based upon lateral pressures and the deflection limits stated. Not for external walls.
3. Wall heights include self weight but are not applicable to axially loaded (load bearing) studs. Point loads and other loads such as shelf loads or live loads are not considered.
4. Base and head track must be similar Base Metal Thickness (BMT) as the stud. The head track BMT is stated in brackets next to wall height if a different BMT compared to the stud is required.
5. Connections to base track and head track checked. Head track checked with a maximum 20mm overlap length of the stud to DH-Track (max 20mm downward and 10mm upwards overhead soffit deflection). Screw fix base track to both sides of stud.
6. Contact Siniat or structural engineer to check walls for earthquake actions or any imposed ceiling loads during an earthquake. Specific project information is required
7. Table refers to Siniat steel studs of grade G300 steel with Zincalume™ AM150 or AM125 corrosion protection. Maximum production lengths available are 7.2m
8. Calculations based upon a single span and designed in accordance with *AS/NZS 4600:2018 Cold Formed Steel Structures*.
9. Wind pressures determined in accordance with *AS/NZS 1170.2 Wind Actions*.
10. Serviceability taken as 42% of ultimate, deflection limited to either height/240 or height/360.
11. The nominated lateral pressures and deflection limits must be checked for suitability for a specific project.

Table 12 Internal Non-Load Bearing Steel Stud Wall Height Table (mm) - REGION B

Refer to Section 2.3 for assistance determining the relevant wind pressures for a specific project.

Steel stud walls lined full height on one side only	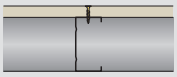	Up to BCA Building Importance Level 3	Ultimate pressure W_U (kPa)	0.71
			Serviceability pressure W_S (kPa)	0.3

Stud Depth and BMT (mm)	Maximum Stud Centres (mm)	Deflection limited to H/240 or 30mm max Untiled plasterboard wall lining			Deflection limited to H/360, or 20mm max Any tiled wall, or untiled fibre cement wall lining		
		10mm	13mm	16mm	10mm	13mm	16mm
51 x 0.5	600	1960	1960	1960	1960	1960	1960
	450	2260	2260	2260	2210	2240	2260
	400	2400	2400	2400	2300	2340	2380
	300	2770 (0.7)	2770 (0.7)	2770 (0.7)	2550 (0.7)	2590 (0.7)	2640 (0.7)
64 x 0.5	600	2220	2220	2220	2220	2220	2220
	450	2560 (0.7)	2560 (0.7)	2560 (0.7)	2560 (0.7)	2560 (0.7)	2560 (0.7)
	400	2720 (0.7)	2720 (0.7)	2720 (0.7)	2720 (0.7)	2720 (0.7)	2720 (0.7)
	300	3140 (0.7)	3140 (0.7)	3140 (0.7)	3040 (0.7)	3080 (0.7)	3130 (0.7)
64 x 0.75	600	2980	2980	2980	2690	2710	2750
	450	3440	3440	3440	2970	3000	3040
	400	3590	3640	3650	3100	3130	3170
	300	3970	4020 (1.15)	4090 (1.15)	3420	3470	3510
64 x 1.15	600	3550	3580	3620	3070	3090	3120
	450	3920	3960	4010	3390	3420	3450
	400	4080	4130	4180	3530	3560	3600
	300	4500	4550	4620	3890	3930	3980
76 x 0.55	600	2580 (1.15)	2580 (1.15)	2580 (1.15)	2580 (1.15)	2580 (1.15)	2580 (1.15)
	450	2980 (1.15)	2980 (1.15)	2980 (1.15)	2980 (1.15)	2980 (1.15)	2980 (1.15)
	400	3160 (1.15)	3160 (1.15)	3160 (1.15)	3160 (1.15)	3160 (1.15)	3160 (1.15)
	300	3660 (1.15)	3660 (1.15)	3660 (1.15)	3590 (1.15)	3640 (1.15)	3660 (1.15)
76 x 0.75	600	3350	3350	3350	3130	3160	3190
	450	3870	3870	3870	3460	3500	3540
	400	4110 (1.15)	4110 (1.15)	4110 (1.15)	3610	3650	3690
	300	4610 (1.15)	4670 (1.15)	4750 (1.15)	3980 (1.15)	4030 (1.15)	4080 (1.15)
76 x 1.15	600	4090	4130	4170	3540	3560	3590
	450	4520	4570	4620	3910	3940	3980
	400	4700	4760	4820	4070	4100	4150
	300	5170	5240	5310	4480	4530	4580
92 x 0.55	600	2580 (1.15)	2580 (1.15)	2580 (1.15)	2580 (1.15)	2580 (1.15)	2580 (1.15)
	450	3440 (1.15)	3440 (1.15)	3440 (1.15)	3440 (1.15)	3440 (1.15)	3440 (1.15)
	400	3680 (1.15)	3680 (1.15)	3680 (1.15)	3680 (1.15)	3680 (1.15)	3680 (1.15)
	300	4210 (1.15)	4210 (1.15)	4210 (1.15)	4210 (1.15)	4210 (1.15)	4210 (1.15)
92 x 0.75	600	3720	3720	3720	3630	3660	3690
	450	4300 (1.15)	4300 (1.15)	4300 (1.15)	4010 (1.15)	4050 (1.15)	4100 (1.15)
	400	4560 (1.15)	4560 (1.15)	4560 (1.15)	4180 (1.15)	4220 (1.15)	4270 (1.15)
	300	5120 (1.15)	5120 (1.15)	5120 (1.15)	4600 (1.15)	4660 (1.15)	4720 (1.15)
92 x 1.15	600	4710	4710	4710	4130	4160	4200
	450	5210	5210	5210	4560	4600	4650
	400	5420	5420	5420	4740	4790	4840
	300	5930	5930	5930	5220	5280	5340
150 x 0.75	600	4310 (1.15)	4310 (1.15)	4310 (1.15)	4310 (1.15)	4310 (1.15)	4310 (1.15)
	450	5090 (1.15)	5090 (1.15)	5090 (1.15)	5090 (1.15)	5090 (1.15)	5090 (1.15)
	400	5310 (1.15)	5310 (1.15)	5310 (1.15)	5310 (1.15)	5310 (1.15)	5310 (1.15)
	300	6170 (1.15)	6170 (1.15)	6170 (1.15)	6170 (1.15)	6170 (1.15)	6170 (1.15)
150 x 1.15	600	6190	6190	6190	6190	6190	6190
	450	6760	6760	6760	6760	6760	6760
	400	6980	6980	6980	6980	6980	6980
	300	7520	7520	7520	7520	7520	7520

Nogging Table

Wall Height (mm)	No. of Noggings evenly spaced
0 - 3000	1 plus soffit nogging
3000 - 6000	2 plus soffit nogging
6000 - 7520	3 plus soffit nogging

Concrete Anchor Table

Wall Height (mm)	Anchor
0 - 7520	SA6x45

1. Concrete 20 MPa minimum. No edge / spacing effects.
2. Anchors at maximum 1.5 x stud spacing up to 600mm maximum, and also 100mm maximum from track ends.
3. 150mm studs require 2 anchors across width.

Soffit Nogging

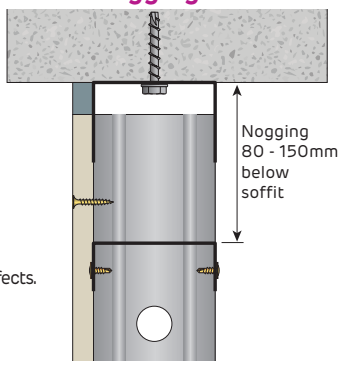

1. Stud frames lined on one side only (including double stud walls) must have an additional soffit nogging installed 80-150mm as shown, unless using a slotted deflection head track.
2. Maximum wall heights based upon lateral pressures and the deflection limits stated. Not for external walls.
3. Wall heights include self weight but are not applicable to axially loaded (load bearing) studs. Point loads and other loads such as shelf loads or live loads are not considered.
4. Base and head track must be similar Base Metal Thickness (BMT) as the stud. The head track BMT is stated in brackets next to wall height if a different BMT compared to the stud is required.
5. Connections to base track and head track checked. Head track checked with a maximum 20mm overlap length of the stud to DH-Track (max 20mm downward and 10mm upwards overhead soffit deflection). Screw fix base track to both sides of stud.
6. Contact Siniat or structural engineer to check walls for earthquake actions or any imposed ceiling loads during an earthquake. Specific project information is required
7. Table refers to Siniat steel studs of grade G300 steel with Zincalume™ AM150 or AM125 corrosion protection. Maximum production lengths available are 7.2m
8. Calculations based upon a single span and designed in accordance with *AS/NZS 4600:2018 Cold Formed Steel Structures*.
9. Wind pressures determined in accordance with *AS/NZS 1170.2 Wind Actions*.
10. Serviceability taken as 42% of ultimate, deflection limited to either height/240 or height/360.
11. The nominated lateral pressures and deflection limits must be checked for suitability for a specific project.

Table 13 Internal Non-Load Bearing Steel Stud Wall Height Table (mm) - REGION B

Refer to Section 2.3 for assistance determining the relevant wind pressures for a specific project.

Steel stud walls lined full height on one side only	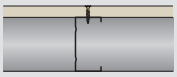	Up to BCA Building Importance Level 3	Ultimate pressure W_U (kPa)	0.83
			Serviceability pressure W_S (kPa)	0.35

Stud Depth and BMT (mm)	Maximum Stud Centres (mm)	Deflection limited to H/240 or 30mm max Untiled plasterboard wall lining			Deflection limited to H/360, or 20mm max Any tiled wall, or untiled fibre cement wall lining		
		10mm	13mm	16mm	10mm	13mm	16mm
51 x 0.5	600	1810	1810	1810	1810	1810	1810
	450	2090	2090	2090	2090	2090	2090
	400	2220 (0.7)	2220 (0.7)	2220 (0.7)	2180 (0.7)	2210 (0.7)	2220 (0.7)
	300	2570 (0.7)	2570 (0.7)	2570 (0.7)	2410 (0.7)	2440 (0.7)	2490 (0.7)
64 x 0.5	600	1920 (1.15)	1920 (1.15)	1920 (1.15)	1920 (1.15)	1920 (1.15)	1920 (1.15)
	450	2370 (1.15)	2370 (1.15)	2370 (1.15)	2370 (1.15)	2370 (1.15)	2370 (1.15)
	400	2510 (1.15)	2510 (1.15)	2510 (1.15)	2510 (1.15)	2510 (1.15)	2510 (1.15)
	300	2900 (1.15)	2900 (1.15)	2900 (1.15)	2880 (1.15)	2900 (1.15)	2900 (1.15)
64 x 0.75	600	2750	2750	2750	2540	2560	2600
	450	3180	3180	3180	2810	2840	2870
	400	3370	3370	3370	2930	2960	3000
	300	3750 (1.15)	3800 (1.15)	3860 (1.15)	3240	3270	3320
64 x 1.15	600	3360	3390	3420	2900	2920	2950
	450	3710	3750	3790	3210	3230	3270
	400	3860	3900	3950	3340	3370	3400
	300	4260	4310	4370	3690	3720	3760
76 x 0.55	600	2210 (1.15)	2210 (1.15)	2210 (1.15)	2210 (1.15)	2210 (1.15)	2210 (1.15)
	450	2760 (1.15)	2760 (1.15)	2760 (1.15)	2760 (1.15)	2760 (1.15)	2760 (1.15)
	400	2930 (1.15)	2930 (1.15)	2930 (1.15)	2930 (1.15)	2930 (1.15)	2930 (1.15)
	300	3380 (1.15)	3380 (1.15)	3380 (1.15)	3380 (1.15)	3380 (1.15)	3380 (1.15)
76 x 0.75	600	3100	3100	3100	2960	2980	3010
	450	3580 (1.15)	3580 (1.15)	3580 (1.15)	3280	3310	3340
	400	3800 (1.15)	3800 (1.15)	3800 (1.15)	3410 (1.15)	3450 (1.15)	3480 (1.15)
	300	4360 (1.15)	4390 (1.15)	4390 (1.15)	3770 (1.15)	3810 (1.15)	3860 (1.15)
76 x 1.15	600	3870	3900	3940	3350	3370	3400
	450	4280	4320	4360	3700	3730	3760
	400	4450	4500	4550	3850	3880	3920
	300	4900	4960	5020	4240	4280	4330
92 x 0.55	600	2210 (1.15)	2210 (1.15)	2210 (1.15)	2210 (1.15)	2210 (1.15)	2210 (1.15)
	450	2940 (1.15)	2940 (1.15)	2940 (1.15)	2940 (1.15)	2940 (1.15)	2940 (1.15)
	400	3310 (1.15)	3310 (1.15)	3310 (1.15)	3310 (1.15)	3310 (1.15)	3310 (1.15)
	300	3930 (1.15)	3930 (1.15)	3930 (1.15)	3930 (1.15)	3930 (1.15)	3930 (1.15)
92 x 0.75	600	3440 (1.15)	3440 (1.15)	3440 (1.15)	3430 (1.15)	3440 (1.15)	3440 (1.15)
	450	3980 (1.15)	3980 (1.15)	3980 (1.15)	3790 (1.15)	3830 (1.15)	3870 (1.15)
	400	4220 (1.15)	4220 (1.15)	4220 (1.15)	3950 (1.15)	3990 (1.15)	4030 (1.15)
	300	4830 (1.15)	4830 (1.15)	4830 (1.15)	4350 (1.15)	4400 (1.15)	4460 (1.15)
92 x 1.15	600	4440	4440	4440	3910	3930	3960
	450	4940	4940	4940	4320	4350	4390
	400	5140	5140	5140	4490	4530	4570
	300	5650	5650	5650	4940	4990	5050
150 x 0.75	600	3690 (1.15)	3690 (1.15)	3690 (1.15)	3690 (1.15)	3690 (1.15)	3690 (1.15)
	450	4800 (1.15)	4800 (1.15)	4800 (1.15)	4800 (1.15)	4800 (1.15)	4800 (1.15)
	400	5020 (1.15)	5020 (1.15)	5020 (1.15)	5020 (1.15)	5020 (1.15)	5020 (1.15)
	300	5560 (1.15)	5560 (1.15)	5560 (1.15)	5560 (1.15)	5560 (1.15)	5560 (1.15)
150 x 1.15	600	5550	5550	5550	5550	5550	5550
	450	6450	6450	6450	6450	6450	6450
	400	6680	6680	6680	6680	6680	6680
	300	7230	7230	7230	7230	7230	7230

Nogging Table

Wall Height (mm)	No. of Noggings evenly spaced
0 - 3000	1 plus soffit nogging
3000 - 6000	2 plus soffit nogging
6000 - 7230	3 plus soffit nogging

Concrete Anchor Table

Wall Height (mm)	Anchor
0 - 7230	SA6x45

1. Concrete 20 MPa minimum. No edge / spacing effects.
2. Anchors at maximum 1.5 x stud spacing up to 600mm maximum, and also 100mm maximum from track ends.
3. 150mm studs require 2 anchors across width.

Soffit Nogging

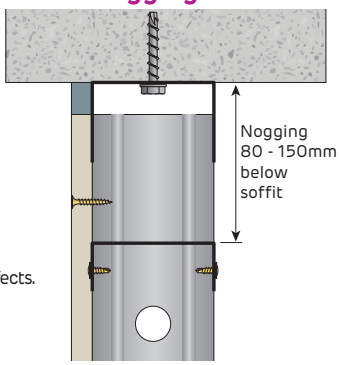

1. Stud frames lined on one side only (including double stud walls) must have an additional soffit nogging installed 80-150mm as shown, unless using a slotted deflection head track.
2. Maximum wall heights based upon lateral pressures and the deflection limits stated. Not for external walls.
3. Wall heights include self weight but are not applicable to axially loaded (load bearing) studs. Point loads and other loads such as shelf loads or live loads are not considered.
4. Base and head track must be similar Base Metal Thickness (BMT) as the stud. The head track BMT is stated in brackets next to wall height if a different BMT compared to the stud is required.
5. Connections to base track and head track checked. Head track checked with a maximum 20mm overlap length of the stud to DH-Track (max 20mm downward and 10mm upwards overhead soffit deflection). Screw fix base track to both sides of stud.
6. Contact Siniat or structural engineer to check walls for earthquake actions or any imposed ceiling loads during an earthquake. Specific project information is required
7. Table refers to Siniat steel studs of grade G300 steel with Zincalume™ AM150 or AM125 corrosion protection. Maximum production lengths available are 7.2m
8. Calculations based upon a single span and designed in accordance with *AS/NZS 4600:2018 Cold Formed Steel Structures.*
9. Wind pressures determined in accordance with *AS/NZS 1170.2 Wind Actions.*
10. Serviceability taken as 42% of ultimate, deflection limited to either height/240 or height/360.
11. The nominated lateral pressures and deflection limits must be checked for suitability for a specific project.

Table 14 Internal Non-Load Bearing Steel Stud Wall Height Table (mm) - REGION A

Refer to Section 2.3 for assistance determining the relevant wind pressures for a specific project.

Acoustic stud walls lined full height on both sides with 0.55mm BMT Deflection Head Track		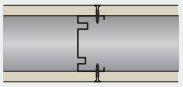		Up to BCA Building Importance Level 3	Ultimate pressure W_U (kPa)		0.39
					Serviceability pressure W_S (kPa)		0.25
Stud Depth and BMT (mm)	**Maximum Stud Centres (mm)**	Deflection limited to H/240 or 30mm max Untiled plasterboard wall lining			Deflection limited to H/360, or 20mm max Any tiled wall, or untiled fibre cement wall lining		
		10mm	**13mm**	**16mm**	**10mm**	**13mm**	**16mm**
92 x 0.55 Acoustic Stud	600mm	3760	3760	3760	3760	3760	3760
	450mm	4130	4130	4130	4130	4130	4130

Acoustic stud walls lined full height on both sides with 0.7mm BMT DHT and Soldier Stud		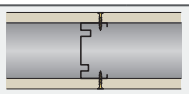		Up to BCA Building Importance Level 3	Ultimate pressure W_U (kPa)		0.39
					Serviceability pressure W_S (kPa)		0.25
Stud Depth and BMT (mm)	**Maximum Stud Centres (mm)**	Deflection limited to H/240 or 30mm max Untiled plasterboard wall lining			Deflection limited to H/360, or 20mm max Any tiled wall, or untiled fibre cement wall lining		
		10mm	**13mm**	**16mm**	**10mm**	**13mm**	**16mm**
92 x 0.55 Acoustic Stud	600mm	5010*	5170*	5350*	4220*	4320*	4440*
	450mm	5540*	5740*	5970*	4690*	4820*	4980*

Acoustic stud walls lined full height on both sides with 0.7mm BMT DHT and Soldier Stud		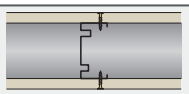		Up to BCA Building Importance Level 3	Ultimate pressure W_U (kPa)		0.54
					Serviceability pressure W_S (kPa)		0.35
Stud Depth and BMT (mm)	**Maximum Stud Centres (mm)**	Deflection limited to H/240 or 30mm max Untiled plasterboard wall lining			Deflection limited to H/360, or 20mm max Any tiled wall, or untiled fibre cement wall lining		
		10mm	**13mm**	**16mm**	**10mm**	**13mm**	**16mm**
92 x 0.55 Acoustic Stud	600mm	4350*	4440*	4440*	3670*	3740*	3820*
	450mm	4440*	4440*	4440*	4090*	4180*	4290*

Acoustic stud walls lined full height on both sides with 0.7mm BMT DHT and Soldier Stud		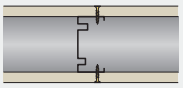		Up to BCA Building Importance Level 3	Ultimate pressure W_U (kPa)		0.70
					Serviceability pressure W_S (kPa)		0.45
Stud Depth and BMT (mm)	**Maximum Stud Centres (mm)**	Deflection limited to H/240 or 30mm max Untiled plasterboard wall lining			Deflection limited to H/360, or 20mm max Any tiled wall, or untiled fibre cement wall lining		
		10mm	**13mm**	**16mm**	**10mm**	**13mm**	**16mm**
92 x 0.55 Acoustic Stud	600mm	3420*	3420*	3420*	3310*	3370*	3420*
	450mm	3420*	3420*	3420*	3420*	3420*	3420*

Acoustic stud walls lined full height on both sides with 0.7mm BMT DHT and Soldier Stud		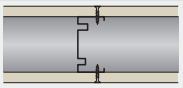		Up to BCA Building Importance Level 3	Ultimate pressure W_U (kPa)		0.85
					Serviceability pressure W_S (kPa)		0.55
Stud Depth and BMT (mm)	**Maximum Stud Centres (mm)**	Deflection limited to H/240 or 30mm max Untiled plasterboard wall lining			Deflection limited to H/360, or 20mm max Any tiled wall, or untiled fibre cement wall lining		
		10mm	**13mm**	**16mm**	**10mm**	**13mm**	**16mm**
92 x 0.55 Acoustic Stud	600mm	2820*	2820*	2820*	2820*	2820*	2820*
	450mm	2820*	2820*	2820*	2820*	2820*	2820*

*Soldier Stud at Deflection Head Track and screw fix 0.5mm BMT Base Track to stud

Soldier Stud Detail

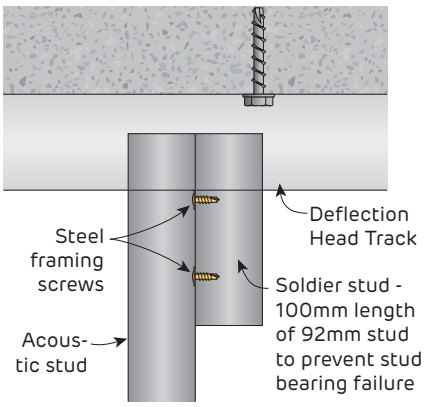

Concrete Anchor Table

Anchor	Anchor Spacing
SA6x45	600mm maximum plus 100mm maximum from track ends

1. Maximum wall heights based upon lateral pressures and the deflection limits stated. Not for external walls.
2. Noggings may reduce sound insulation performance.
3. Wall heights include self weight but are not applicable to axially loaded (load bearing) studs. Point loads and other loads such as shelf loads or live loads are not considered, and must be checked with Siniat.
4. Base track must be 0.5mm Base Metal Thickness (BMT) or greater. Deflection Head Track BMT is stated in table.
5. Connections to base track and head track checked. Head track checked with a maximum 20mm overlap length of the stud to DH-Track (max 20mm downward and 10mm upwards overhead soffit deflection).
6. Contact Siniat or a structural engineer to check walls for earthquake actions or any imposed ceiling loads during an earthquake. Specific project information is required.
7. Table refers to Siniat steel studs of grade G300 steel with Zincalume™ AM150 or AM125 corrosion protection. Maximum production lengths available are 6.0m
8. Designed in accordance with *AS/NZS 4600:2018 Cold Formed Steel Structures.*
9. Wind pressures determined in accordance with *AS/NZS 1170.2 Wind Actions.*
10. Serviceability wind pressure taken as 65% of ultimate, and serviceability deflection limited to either height/240 or height/360.
11. The nominated lateral pressures and deflection limits must be checked for suitability for a specific project.
12. For BCA Building Importance Level 4, please contact Siniat.

Table 15 Internal Non-Load Bearing Steel Stud Wall Height Table (mm) - REGION B

Refer to Section 2.3 for assistance determining the relevant wind pressures for a specific project.

Acoustic stud walls lined full height on both sides with 0.55mm BMT Deflection Head Track	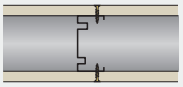	Up to BCA Building Importance Level 3	Ultimate pressure W_U (kPa)	0.59
			Serviceability pressure W_S (kPa)	0.25

Stud Depth and BMT (mm)	Maximum Stud Centres (mm)	Deflection limited to H/240 or 30mm max Untiled plasterboard wall lining			Deflection limited to H/360, or 20mm max Any tiled wall, or untiled fibre cement wall lining		
		10mm	13mm	16mm	10mm	13mm	16mm
92 x 0.55 Acoustic Stud	600mm	2480	2480	2480	2480	2480	2480
	450mm	2730	2730	2730	2730	2730	2730

Acoustic stud walls lined full height on both sides with 0.7mm BMT DHT and Soldier Stud	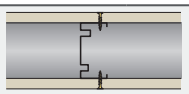	Up to BCA Building Importance Level 3	Ultimate pressure W_U (kPa)	0.59
			Serviceability pressure W_S (kPa)	0.25

Stud Depth and BMT (mm)	Maximum Stud Centres (mm)	Deflection limited to H/240 or 30mm max Untiled plasterboard wall lining			Deflection limited to H/360, or 20mm max Any tiled wall, or untiled fibre cement wall lining		
		10mm	13mm	16mm	10mm	13mm	16mm
92 x 0.55 Acoustic Stud	600mm	4060*	4060*	4060*	4060*	4060*	4060*
	450mm	4060*	4060*	4060*	4060*	4060*	4060*

Acoustic stud walls lined full height on both sides with 0.7mm BMT DHT and Soldier Stud	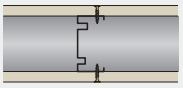	Up to BCA Building Importance Level 3	Ultimate pressure W_U (kPa)	0.83
			Serviceability pressure W_S (kPa)	0.35

Stud Depth and BMT (mm)	Maximum Stud Centres (mm)	Deflection limited to H/240 or 30mm max Untiled plasterboard wall lining			Deflection limited to H/360, or 20mm max Any tiled wall, or untiled fibre cement wall lining		
		10mm	13mm	16mm	10mm	13mm	16mm
92 x 0.55 Acoustic Stud	600mm	2890*	2890*	2890*	2890*	2890*	2890*
	450mm	2890*	2890*	2890*	2890*	2890*	2890*

Acoustic stud walls lined full height on both sides with 0.55mm BMT DHT and Universal Brackets at Head and Base Tracks	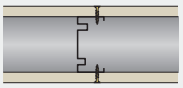	Up to BCA Building Importance Level 3	Ultimate pressure W_U (kPa)	1.07
			Serviceability pressure W_S (kPa)	0.45

Stud Depth and BMT (mm)	Maximum Stud Centres (mm)	Deflection limited to H/240 or 30mm max Untiled plasterboard wall lining			Deflection limited to H/360, or 20mm max Any tiled wall, or untiled fibre cement wall lining		
		10mm	13mm	16mm	10mm	13mm	16mm
92 x 0.55 Acoustic Stud	600mm	3250	3330	3440	3250	3330	3430
	450mm	3890	4040	4210	3690	3760	3840

Acoustic stud walls lined full height on both sides with 0.55mm BMT DHT and Universal Brackets at Head and Base Tracks	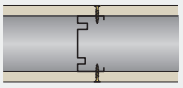	Up to BCA Building Importance Level 3	Ultimate pressure W_U (kPa)	1.30
			Serviceability pressure W_S (kPa)	0.55

Stud Depth and BMT (mm)	Maximum Stud Centres (mm)	Deflection limited to H/240 or 30mm max Untiled plasterboard wall lining			Deflection limited to H/360, or 20mm max Any tiled wall, or untiled fibre cement wall lining		
		10mm	13mm	16mm	10mm	13mm	16mm
92 x 0.55 Acoustic Stud	600mm	2850	2910	2990	2850	2910	2990
	450mm	3410	3510	3630	3410	3460	3530

*Soldier Stud at Deflection Head Track and screw fix 0.5mm BMT Base Track to stud

Soldier Stud Detail

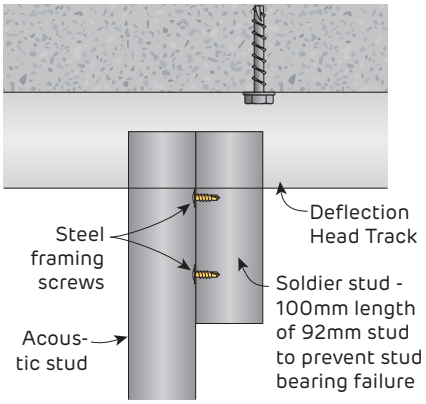

Concrete Anchor Table

Anchor	Spacing
SA6x45	600mm maximum plus 100mm maximum from track ends

1. Maximum wall heights based upon lateral pressures and the deflection limits stated. Not for external walls.
2. Noggings may reduce sound insulation performance.
3. Wall heights include self weight but are not applicable to axially loaded (load bearing) studs. Point loads and other loads such as shelf loads or live loads are not considered, and must be checked with Siniat.
4. Base track must be 0.5mm Base Metal Thickness (BMT) or greater. Deflection Head Track BMT is stated in table.
5. Connections to base track and head track checked. Head track checked with a maximum 20mm overlap length of the stud to DH-Track (max 20mm downward and 10mm upwards overhead soffit deflection).
6. Contact Siniat or a structural engineer to check walls for earthquake actions or any imposed ceiling loads during an earthquake. Specific project information is required.
7. Table refers to Siniat steel studs of grade G300 steel with Zincalume™ AM150 or AM125 corrosion protection. Maximum production lengths available are 6.0m
8. Designed in accordance with *AS/NZS 4600:2018 Cold Formed Steel Structures.*
9. Wind pressures determined in accordance with *AS/NZS 1170.2 Wind Actions.*
10. Serviceability wind pressure taken as 42% of ultimate, and serviceability deflection limited to either height/240 or height/360.
11. The nominated lateral pressures and deflection limits must be checked for suitability for a specific project.
12. For BCA Building Importance Level 4, please contact Siniat or refer to the Framing Tables Supplement.

Worked Example

Internal wall partition lined full height on both sides

- Single leaf internal partition - lined full height with 13mm plasterboard on both sides
- Wall is not tiled, so deflection limit h/240 is suitable
- Height of partition is 3400mm
- Shopping centre that is effectively sealed where the external walls have non-opening windows
- Internal partition is adjacent to an external wall with no potential opening in any external surface greater than 0.5%
- Building Importance Level 2
- Terrain Category 1.5
- Internal partition is located 25m above ground level.

Step 1 *Determine $C_{p,i\ net}$*

From Section 2.3, first find the appropriate $C_{p,i\ net}$ from the information above, the internal wall partition is the same as Case 3, therefore the appropriate $C_{p,i\ net}$ is 0.4.

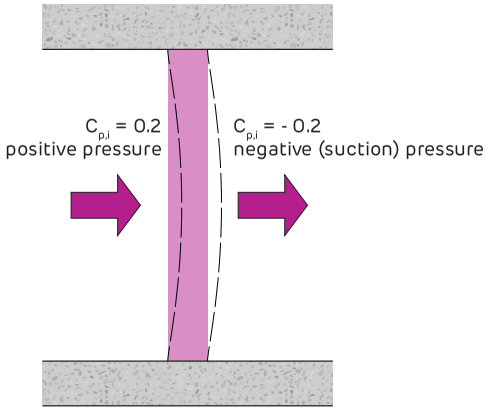

Case 3: Internal Wall $C_{p,i\ net}$ = 0.4

1. Air-conditioned Hospitals, Offices and Shopping Centres (except loading docks) that are effectively sealed where the external walls have non-opening windows
2. Single leaf internal wall
3. Effectively sealed wall
4. Adjacent to an external wall, or other internal walls that provide an effective seal between spaces.

Step 2 *Determine the Wind Region*

From Figure 2 'Australian Wind Regions' in Section 2.3, find Newcastle located in Wind Region A.

Step 3 *Determine the building's Importance Level (IL)*

Usually found on the front page of the Structural Engineers notes for the project. In this case the IL is 2.

Step 4 *Determine the Terrain Category (TC)* of the surrounding landscape around the building. Also usually found on the front page of the Structural Engineers notes for the project. In this case the TC is 1.5.

Step 5 *Determine Ultimate (W_U) and Serviceability (W_S) Wind Pressures.*

The floor of the building where the partition is to be built is 25m above the ground level. Refer to Table 10 in Section 2.3 'Internal Wind Pressures $C_{p,i}$ = 0.4'. The pressures found are Wu = 0.64 kPa, and Ws = 0.43 kPa.

Step 6 *Determine frame.*

Use the relevant 'Internal Non-Load Bearing Steel Stud Wall Height Table' in Section 3.1. For this case the internal wind pressures are rounded up to the nearest tables nominated pressure which are W_U = 0.70 kPa and W_S = 0.45 kPa.

Answer

64 x 0.75mm BMT studs at 400mm centres to reach a height of 3430mm.

Table 10 Internal Wind Pressures $C_{p,i}$ =0.4

$C_{p,i}$ = Internal wind pressure coefficient

Building Importance Level 2																														
Region	A															B														
Ultimate Wind Speed V500 (m/s)	45															57														
Serviceability Wind Speed V25 (m/s)	37															39														
Terrain Category	1			1.5			2			2.5			3			1			1.5			2			2.5			3		
Height above ground (z)	10	25	50	10	25	50	10	25	50	10	25	50	10	25	50	10	25	50	10	25	50	10	25	50	10	25	50	10	25	50
$M_{z,cat}$	1.12	1.21	1.25	1.06	1.15	1.22	1.00	1.10	1.18	0.92	1.04	1.13	0.83	0.97	1.07	1.12	1.21	1.25	1.06	1.15	1.22	1.00	1.10	1.18	0.92	1.04	1.13	0.83	0.97	1.07
Ultimate Wind Pressure (kPa)	0.61	0.71	0.76	0.55	**0.64**	0.72	0.49	0.59	0.68	0.41	0.53	0.62	0.33	0.46	0.56	0.98	1.14	1.22	0.88	1.03	1.16	0.78	0.94	1.09	0.65	0.84	1.00	0.54	0.73	0.89
Serviceability Wind Pressure (kPa)	0.41	0.48	0.51	0.37	**0.43**	0.49	0.33	0.40	0.46	0.28	0.36	0.42	0.23	0.31	0.38	0.46	0.53	0.57	0.41	0.48	0.54	0.37	0.44	0.51	0.31	0.39	0.47	0.25	0.34	0.42

Internal Non-Load Bearing Steel Stud Wall Height Table (mm) - REGION A

Refer to Section 2.3 for assistance determining the relevant wind pressures for a specific project.

Steel stud walls lined full height on both sides		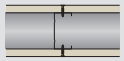	Up to BCA Building Importance Level 3		Ultimate pressure W_U (kPa)		0.70
					Serviceability pressure W_S (kPa)		0.45
Stud Depth and BMT (mm)	Maximum Stud Centres (mm)	Deflection limited to H/240 or 30mm max Untiled plasterboard wall lining			Deflection limited to H/360, or 20mm max Any tiled wall, or untiled fibre cement wall lining		
		10mm	13mm	16mm	10mm	13mm	16mm
51 x 0.5	600	2140	2210	2270	1820	1870	1950
	450	2390	2460	2560	2030	2080	2160
	400	2500	2580	2680	2120	2180	2250
	300	2790	2820	3000 (0.7)	2370	2430	2510
64 x 0.5	600	2200	2200	2200	2190	2200	2200
	450	2890 (0.7)	2930 (0.7)	2930 (0.7)	2440	2500	2570
	400	3030 (0.7)	3110 (0.7)	3220 (0.7)	2560	2620	2690
	300	3370 (0.7)	3480 (0.7)	3610 (0.7)	2850 (0.7)	2930 (0.7)	3010 (0.7)
64 x 0.75	600	2880	2940	3010	2450	2490	2550
	450	3210	3280	3370	2730	2780	2840
	400	3350	**3430**	3530	2850	2900	2970
	300	3720	3820	3940	3170	3240	3320

Steel Profile Information

Material

Manufacturer	Grade	Ultimate	Yield	Coating
Siniat	G300	340 MPa	300 MPa	AM150 / AM125

1. Steel grade and coating in accordance with AS 1397 *Continuous hot-dip metallic coated steel sheet and strip*

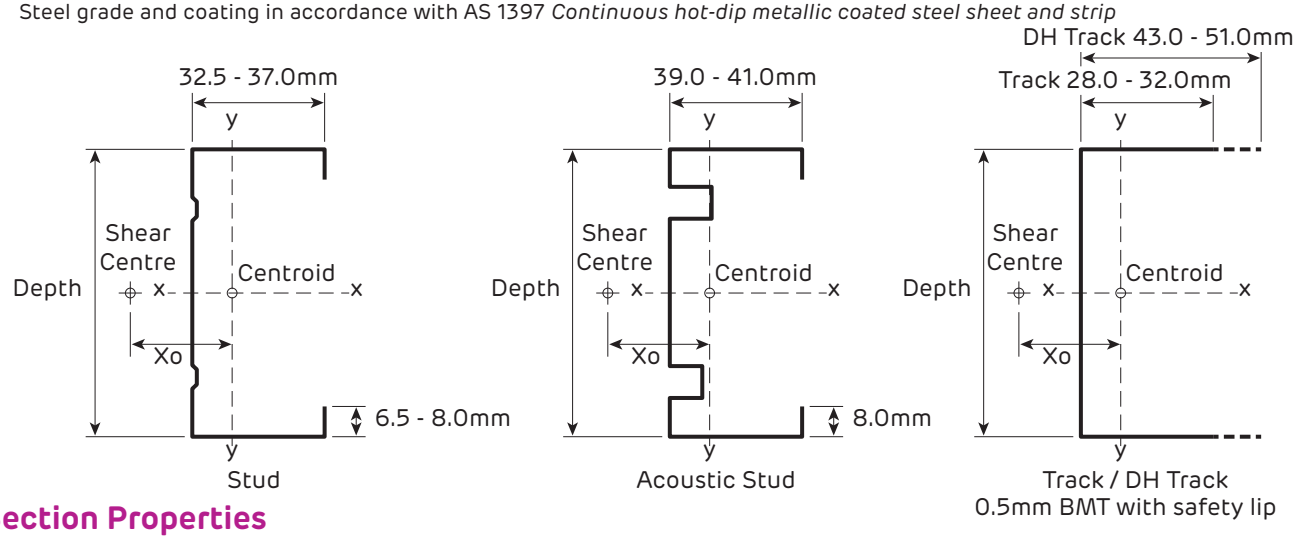

Section Properties

Profile	Dimensions (mm)		Shear Centre from Centroid (mm)	Area (mm²)	Moment of Inertia (mm⁴)		Section Modulus (mm³)		Torsion Constant J (mm⁴)	Warping Constant Iw (mm⁶)
	Depth	BMT	Xo		Ixx	Iyy	Zxx	Zyy		
Stud	51	0.5	-28.7	63.3	28,320	10,170	1,127	449	5.3	5,498,000
	64	0.5	-26.4	69.3	46,840	10,640	1,481	453	5.8	8,545,000
	64	0.75	-26.5	103.8	69,520	15,960	2,207	686	19.5	12,930,000
	64	1.15	-26.7	158.8	105,700	24,870	3,376	1,056	70.0	19,320,000
	76	0.55	-25.2	83.2	77,040	12,860	2,049	518	8.4	13,980,000
	76	0.75	-27.3	116.9	108,400	20,140	2,891	798	21.9	22,800,000
	76	1.15	-26.4	176.0	160,600	28,700	4,305	1,161	77.6	31,980,000
	92	0.55	-24.4	93.4	121,800	14,540	2,672	571	9.4	23,680,000
	92	0.75	-24.2	126.8	164,300	19,450	3,611	767	23.8	31,460,000
	92	1.15	-24.7	194.7	251,300	30,770	5,548	1,199	85.8	48,940,000
	150	0.75	-20.0	171.1	529,700	23,340	7,110	847	32.1	98,580,000
	150	1.15	-20.0	262.1	808,500	35,850	10,880	1,296	115.6	150,300,000
Acoustic Stud	92	0.55	-22.2	126.4	156,600	20,220	3,376	712	12.8	33,640,000
Track	51	0.5	-22.8	57.9	27,190	6,850	1,051	290	4.8	3,112,000
	64	0.5	-17.8	60.4	40,650	5,196	1,256	236	5.0	3,717,000
	64	0.7	-17.5	84.2	56,920	7,046	1,750	323	13.8	5,081,000
	64	1.15	-18.1	140.1	95,810	12,444	2,937	558	61.8	8,989,000
	76	0.55	-18.2	68.4	63,000	6,549	1,642	273	5.7	6,639,000
	76	0.7	-17.9	95.4	88,180	8,896	2,289	375	15.6	9,084,000
	76	1.15	-16.7	153.5	141,000	12,780	3,642	561	67.7	13,160,000
	92	0.55	-16.5	75.9	96,680	6,602	2,085	271	6.3	9,939,000
	92	0.7	-16.6	106.7	137,000	9,375	2,942	383	17.4	14,210,000
	92	1.15	-15.6	172.6	220,300	13,780	4,714	583	76.1	21,050,000
	150	0.75	-13.0	157.6	468,000	11,220	6,199	429	29.6	47,330,000
	150	1.15	-12.9	241.5	718,500	16,890	9,491	649	106.5	71,610,000
DH Track	51	0.55	-38.3	82.5	43,020	22,890	1,651	687	8.3	10,820,000
	64	0.55	-35.7	89.1	68,770	24,040	2,118	700	9.0	17,460,000
	64	0.7	-35.9	113.6	88,020	30,890	2,706	897	18.6	22,490,000
	64	1.15	-35.7	186.3	145,500	50,170	4,450	1,461	82.1	36,820,000
	76	0.55	-31.4	92.4	94,900	21,510	2,467	640	9.3	21,830,000
	76	0.7	-32.4	119.2	123,500	29,280	3,206	854	19.5	29,780,000
	76	1.15	-33.0	193.2	188,300	48,250	5,062	1,409	85.2	45,660,000
	92	0.55	-32.0	104.4	151,400	27,030	3,263	739	10.5	40,000,000
	92	0.7	-32.2	133.2	194,300	34,750	4,176	947	21.8	51,680,000
	92	1.15	-30.7	215.3	314,200	51,950	6,714	1,457	94.9	78,040,000
	150	0.75	-25.5	183.9	617,700	39,310	8,181	1,016	34.5	158,600,000
	150	1.15	-25.4	280.8	937,400	59,520	12,450	1,546	123.8	238,600,000

Non-Fire Rated and Fire Rated
Continuous Nogging Track

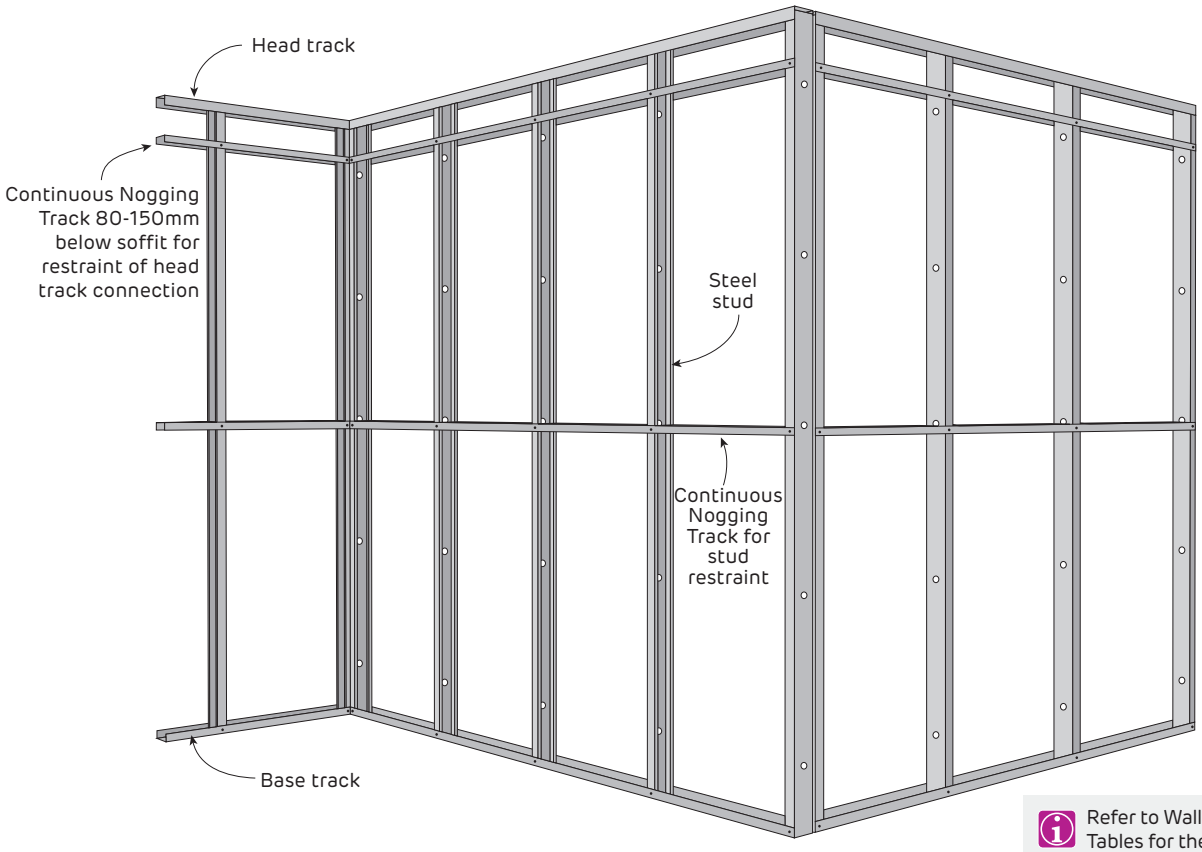

Refer to Wall Height Tables for the number of noggings required

FIGURE 2 Steel Stud Frame with Continuous Nogging Track

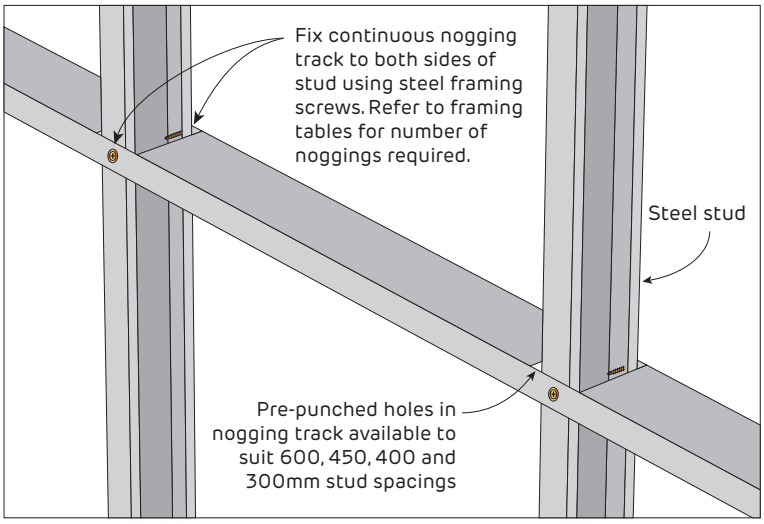

FIGURE 3 Continuous Nogging Track
Perspective

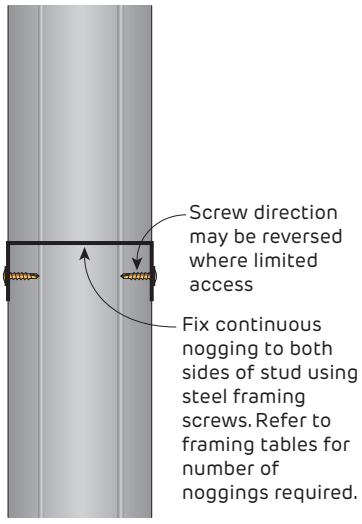

FIGURE 4 Continuous Nogging Track
Section

Non-Fire Rated and Fire Rated
Individual Nogging Track Pieces

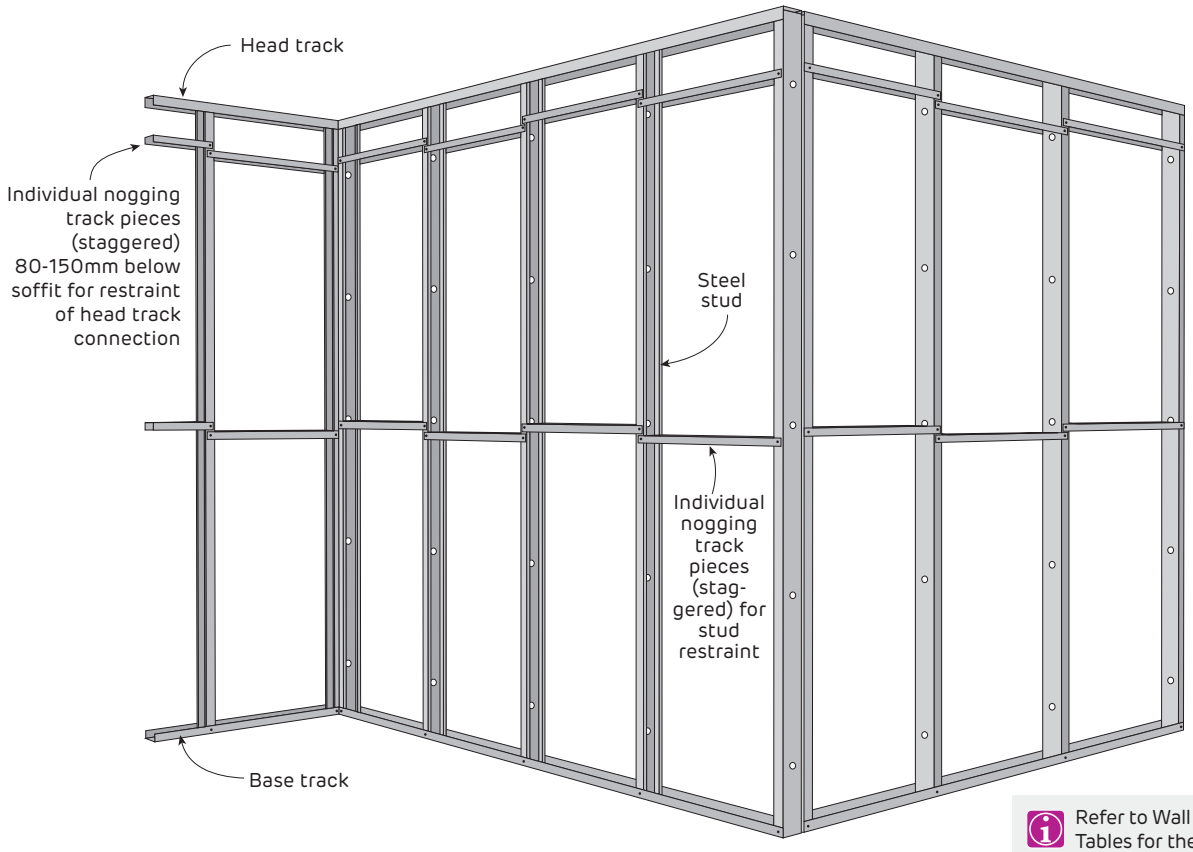

Refer to Wall Height Tables for the number of noggings required

FIGURE 5 Steel Stud Frame with Individual Nogging Track Pieces

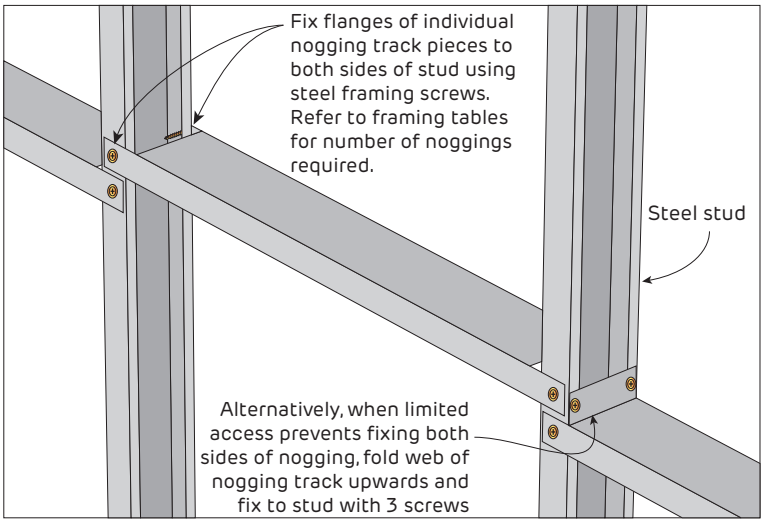

FIGURE 6 Individual Nogging Track Pieces
Perspective

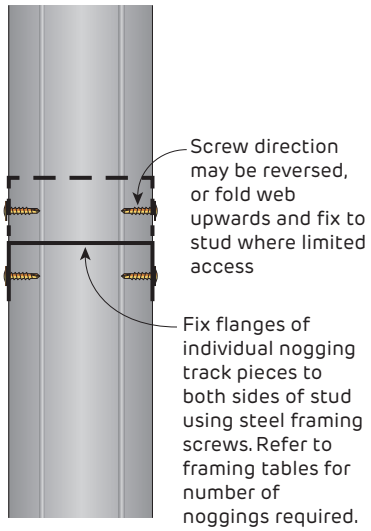

FIGURE 7 Individual Nogging Track Pieces
Section

Non-Fire Rated and Fire Rated
Strap and Block Nogging Track

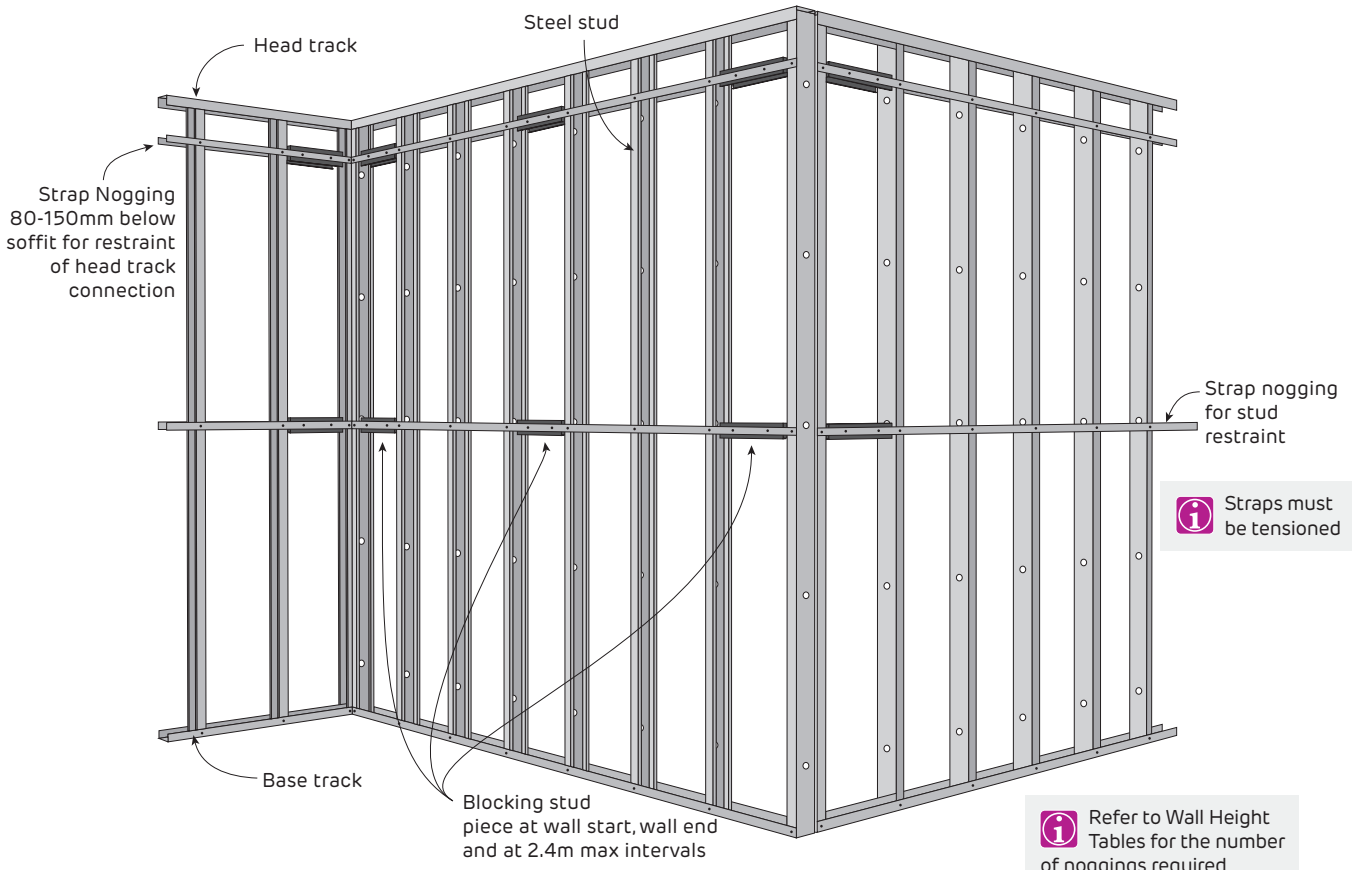

FIGURE 8 Steel Stud Frame with Strap and Block Nogging

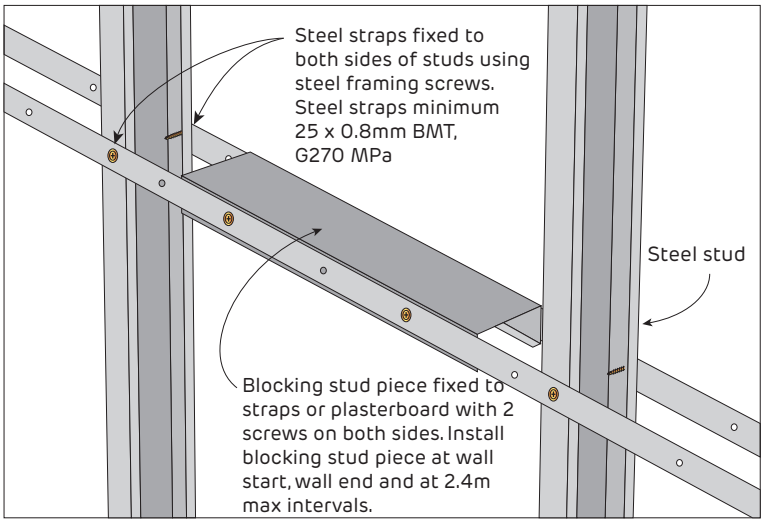

Straps must be tensioned

FIGURE 9 Strap and Block Nogging
Perspective

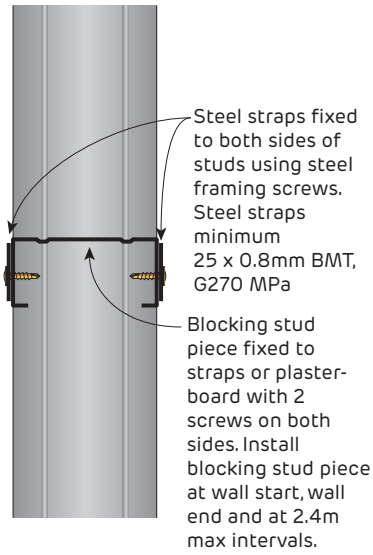

FIGURE 10 Strap and Block Nogging
Section

Non-Fire Rated and Fire Rated
Strap and Block Nogging Track

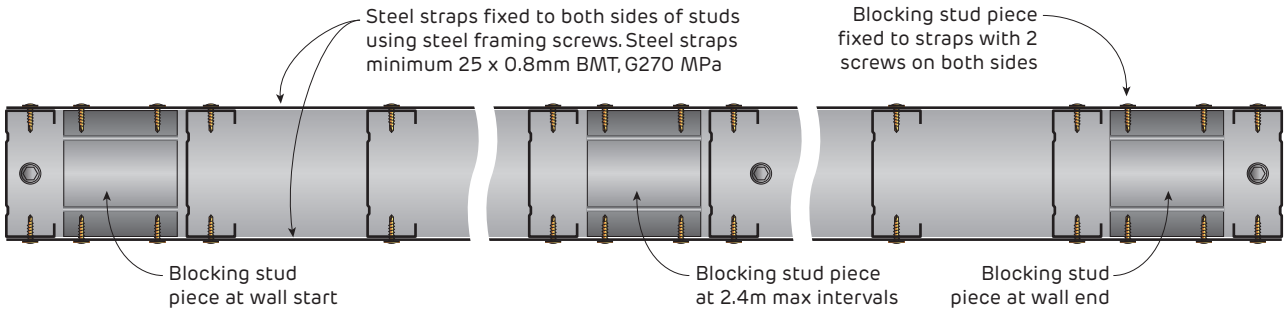

FIGURE 11 Lined or Unlined Stud Wall
Load bearing and non-load bearing walls
Plan

Straps must be tensioned

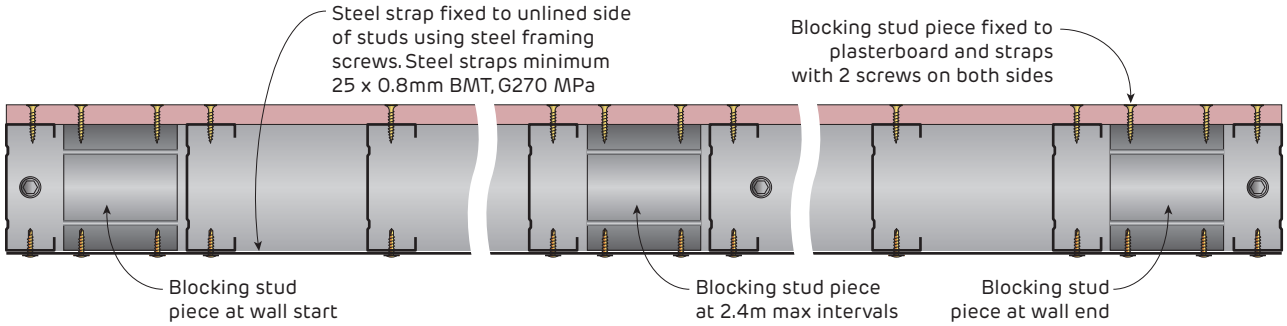

FIGURE 12 Stud Wall Lined on One Side Only
Non-load bearing walls only
Plan

Refer to Wall Height Tables for the number of noggings required

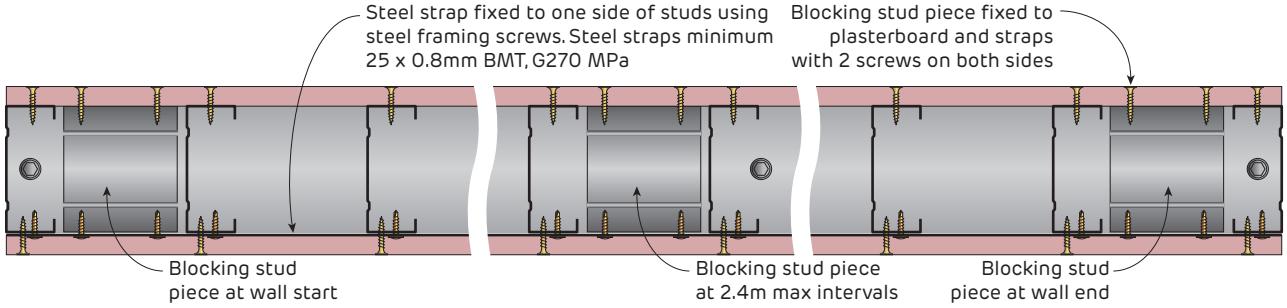

FIGURE 13 Stud Wall Lined on Both Sides
Non-load bearing walls only
Plan

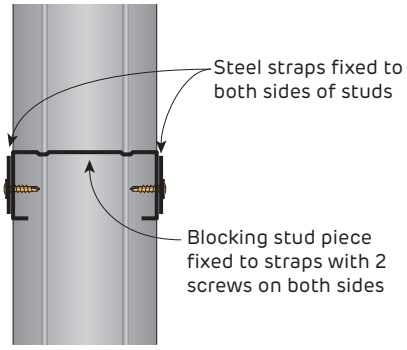

FIGURE 14 Lined or Unlined Stud Wall
Load bearing and non-load bearing walls
Section

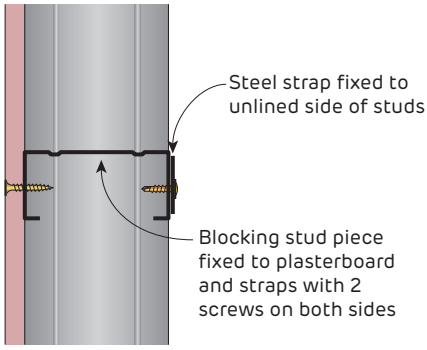

FIGURE 15 Stud Wall Lined on One Side Only
Non-load bearing walls only
Section

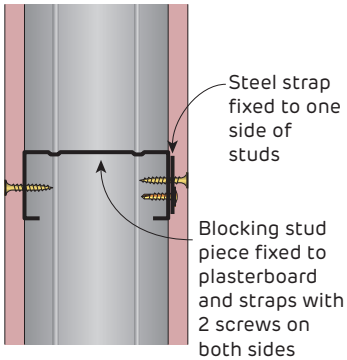

FIGURE 16 Stud Wall Lined on Both Sides
Non-load bearing walls only
Section

Non-Fire Rated and Fire Rated
Strap Noggings

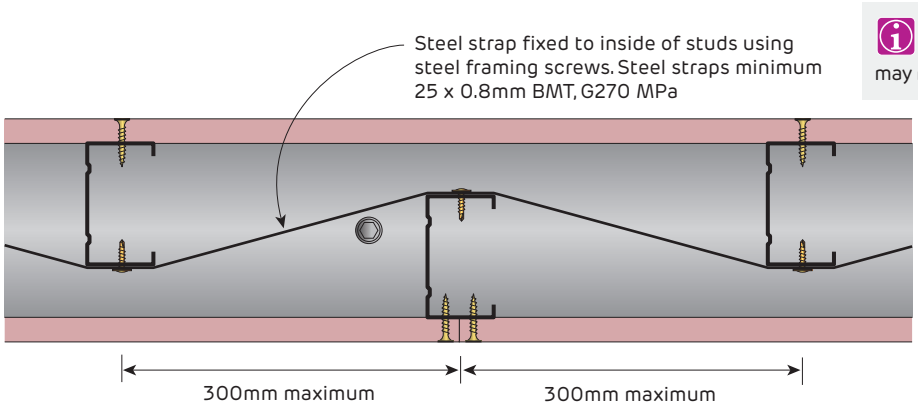

FIGURE 17 Strap Nogging for Staggered Stud Walls
Plan

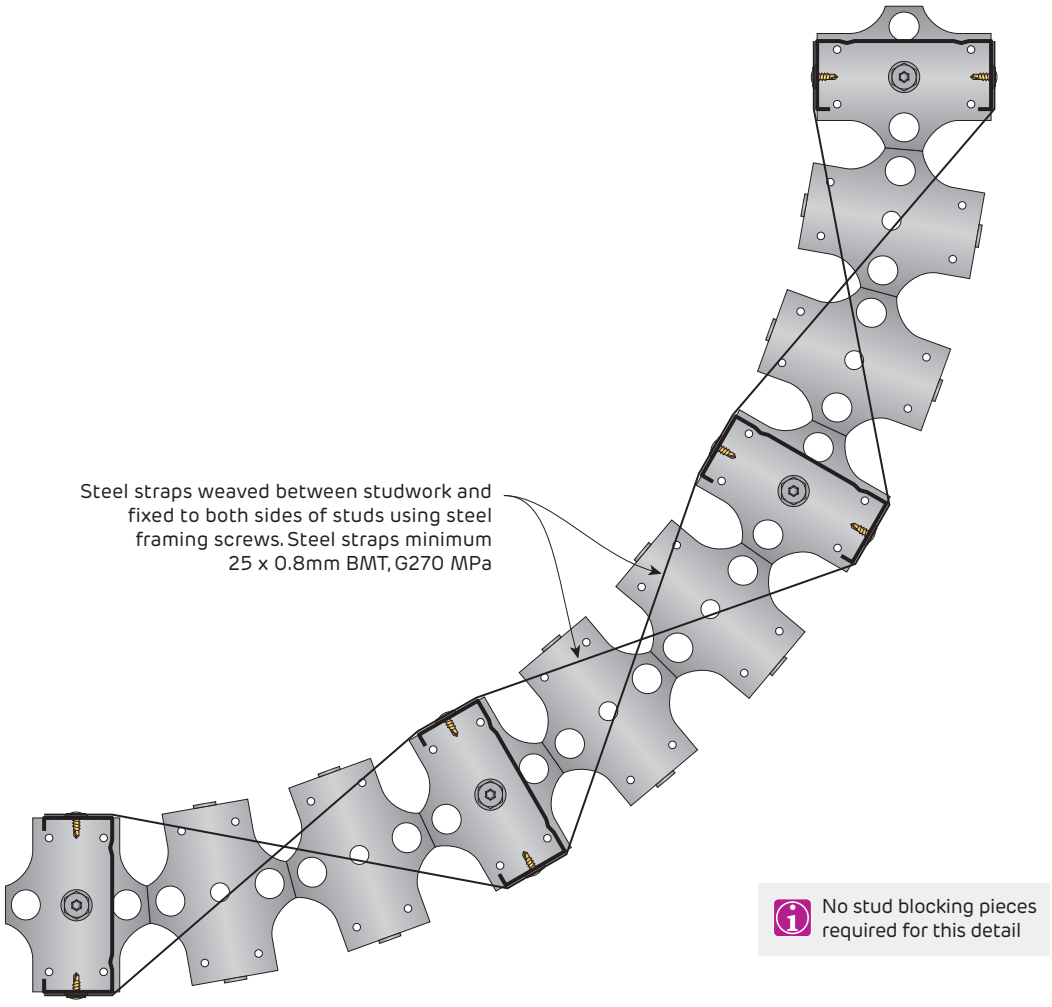

FIGURE 18 Strap Nogging for Curved Stud Walls
Plan

Non-Load Bearing Wall
Steel Stud Cut-Out Tolerances

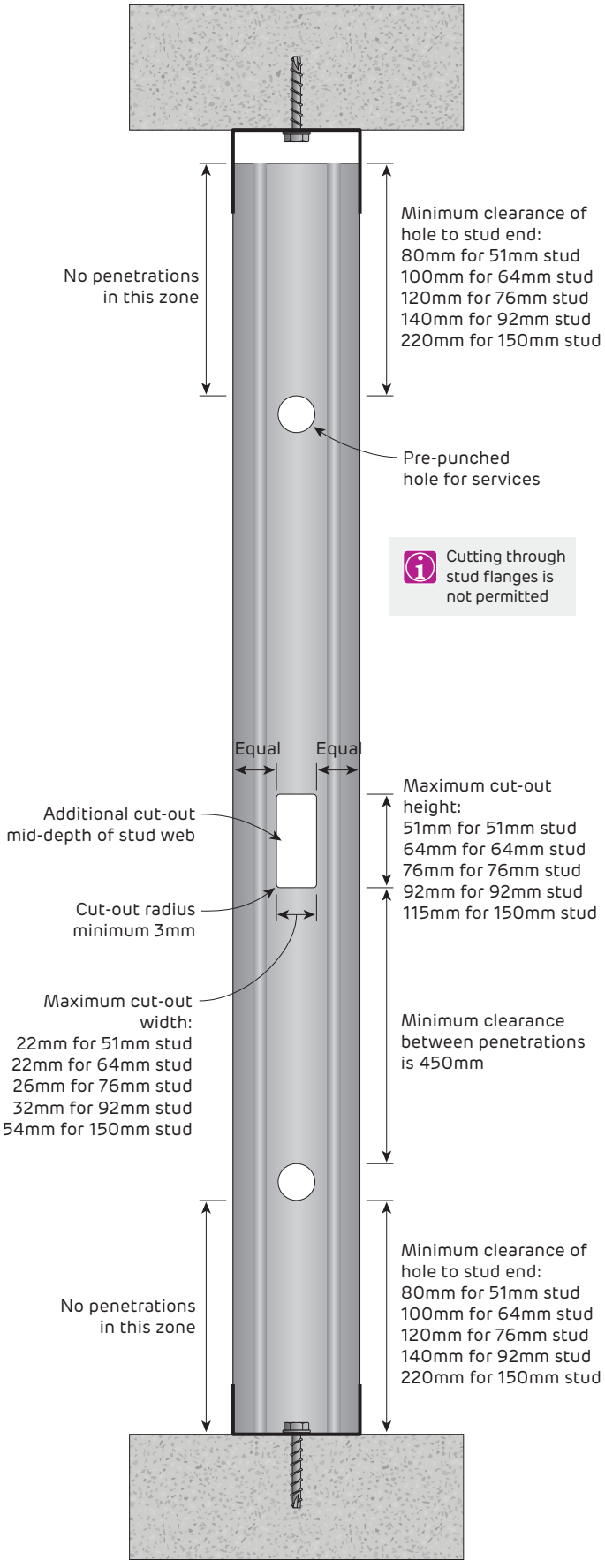

FIGURE 19 Stud Cut-out Tolerances
Non-load bearing walls only
Section

Plasterboard Layout

	Non-fire Rated	Fire Rated
Vertical joints must be 200mm minimum from the edge of any opening such as windows and doorways to minimise cracking at the joints.	✓	✓
Install sheets horizontally when using Siniat Acoustic Stud. Float and back block butt joints according to Installation figures.	✓	✓
Horizontal Layout		
Stagger butt joints in single layer systems by 300mm minimum on adjoining sheets and on opposite sides of the wall.	✓	✓
Stagger butt joints in multilayer systems by 300mm minimum on adjoining sheets and between layers.	✓	✓
First layer butt joints must be backed by a stud or back-blocked.	✓	✓
Stagger recessed edges by 300mm minimum between layers.	✓	✓
Stagger recessed edges in single layer systems by 300mm minimum on opposite sides of the wall or alternatively, back by a nogging.		✓
Vertical Layout		
Alternate from one side of the wall to the other when fixing the plasterboard sheets.	✓	✓
Stagger butt joints in single layer systems by 300mm minimum on adjoining sheets and on opposite sides of the wall.	✓	✓
Stagger butt joints by 300mm minimum on adjoining sheets and between layers.	✓	✓
First layer butt joints must be backed by a nogging or back-blocked.	✓	
First layer butt joints must be backed by a nogging.		✓
Stagger recessed edges by 300mm minimum between layers.	✓	✓
Stagger recessed edges by 300mm minimum on opposite sides of the wall for single layer systems	✓	✓

> Install plasterboard sheets horizontally when practical to minimise stud twisting and reduce the effect of glancing light.

> Minimise butt joints by using long sheets.

Plasterboard Fixing

	Non-fire Rated	Fire Rated
Drive screws to just below the sheet surface, taking care not to break the paper linerboard. For over-driven screws, install another screw 20mm away. Leave or remove the over-driven screw and patch.	✓	✓
Laminating screws can be used to fix butt joints in the second and third layer.	✓	✓
Screw and Adhesive Method		
Apply mastagrip Stud Adhesive after the frame is clean, dry, and free from grease, dust and other contaminants.	✓	
Apply mastagrip daubs 200mm minimum from screws and plasterboard edges.	✓	
Screw Only Method		
Use the 'Screw Only Method' in tiled or fire rated areas. Stud adhesive is not permitted.	✓	✓

The 'Screw and Adhesive Method' is recommended for non-fire rated applications.

mastagrip will:

- Minimise screw popping
- Reduce the number of screw heads that may show in glancing light
- Assist in compensating for frame irregularities.

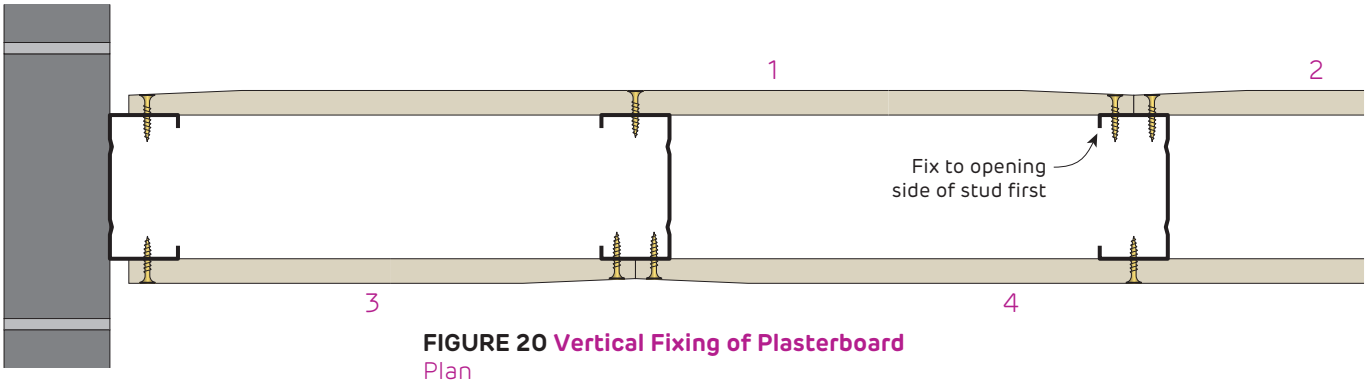

FIGURE 20 Vertical Fixing of Plasterboard
Plan

Screw Type and Minimum Size for the Installation of Plasterboard to Steel

Plasterboard Thickness	1st Layer	2nd Layer	3rd Layer	4th Layer
6.5mm	6g x 25mm screw	6g x 25mm screw	-	-
10mm	6g x 25mm screw	6g x 41mm screw *	-	-
13mm	6g x 25mm screw	6g x 41mm screw *	7g x 57mm screw *	-
16mm	6g x 32mm screw	6g x 45mm screw *	8g x 65mm screw *	10g x 38mm laminating screw
2 x 25mm + 1 x 13mm	6g x 41mm screw	8g x 65mm screw	8g x 75mm screw	-

For steel ≤ 0.75mm BMT, use fine thread needle point screws.

For steel ≥ 0.75mm BMT, use fine thread drill point screws.

*10g x 38mm Laminating screws may be used as detailed in installation diagrams.

FIGURE 21 Non-Fire Rated 1 Layer - Horizontal
Screw and Adhesive Method

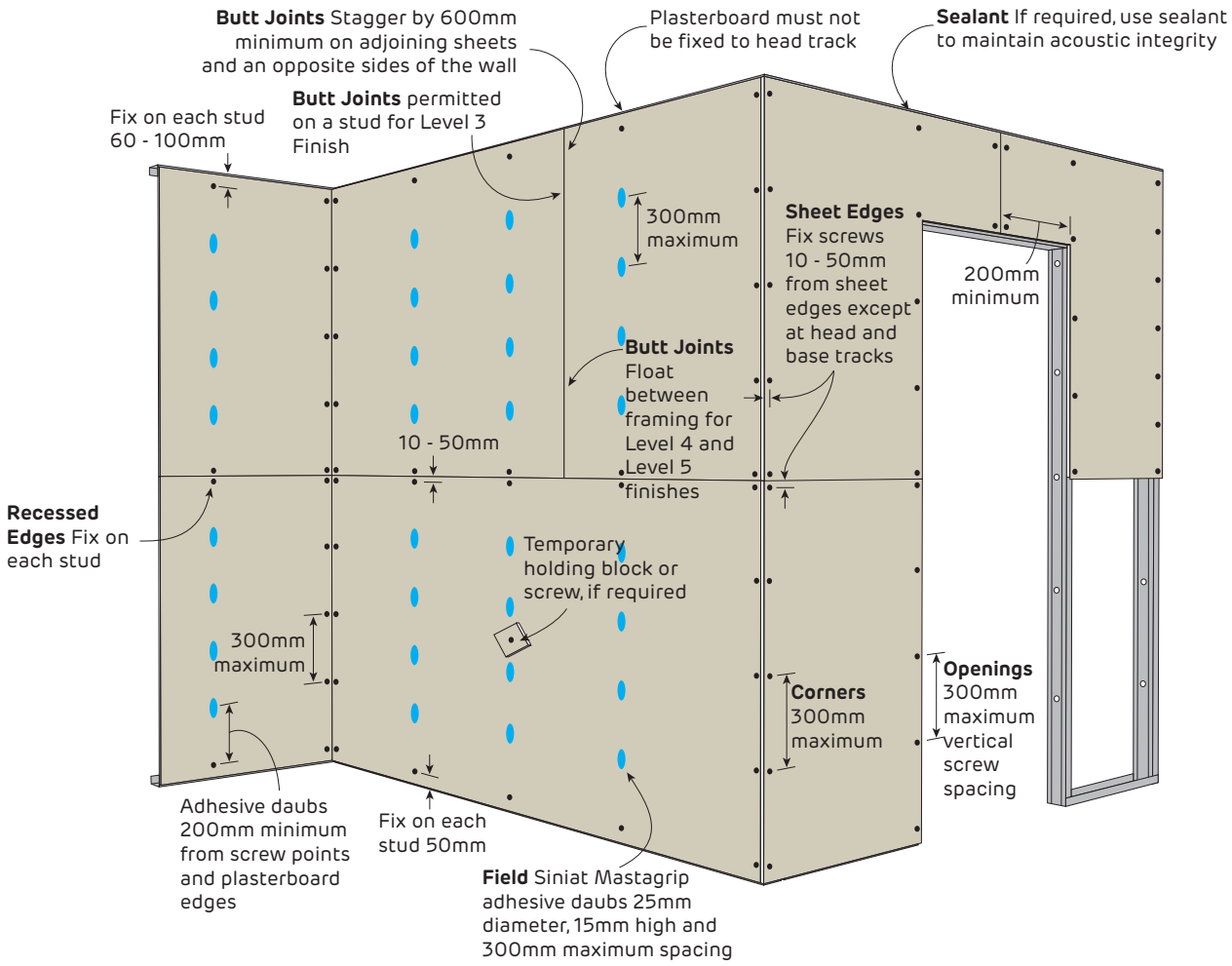

Fixing Pattern Table

Sheet Width	Fixing Pattern
600mm	S A A S
900mm	S A A A S
1200mm	S A A A A S
1350mm	S A A A A A S
1400mm	S A A A A A S

S = Screw
A = Adhesive daub

Maximum Ultimate Limit State Wind Load Table (kPa)

Plasterboard Thickness	Maximum Wall Stud Spacing			
	600mm	450mm	400mm	300mm
10mm	0.95	1.30	1.45	1.95
13mm	1.10	1.45	1.65	2.20
16mm	1.10	1.45	1.65	2.20

1. Calculations do not include the framing which must be independently designed to suit the desired loads.
2. If higher internal wind pressures are expected, please contact Siniat for specific design.

FIGURE 22 Non-Fire Rated 1 Layer - Horizontal
Screw Only Method

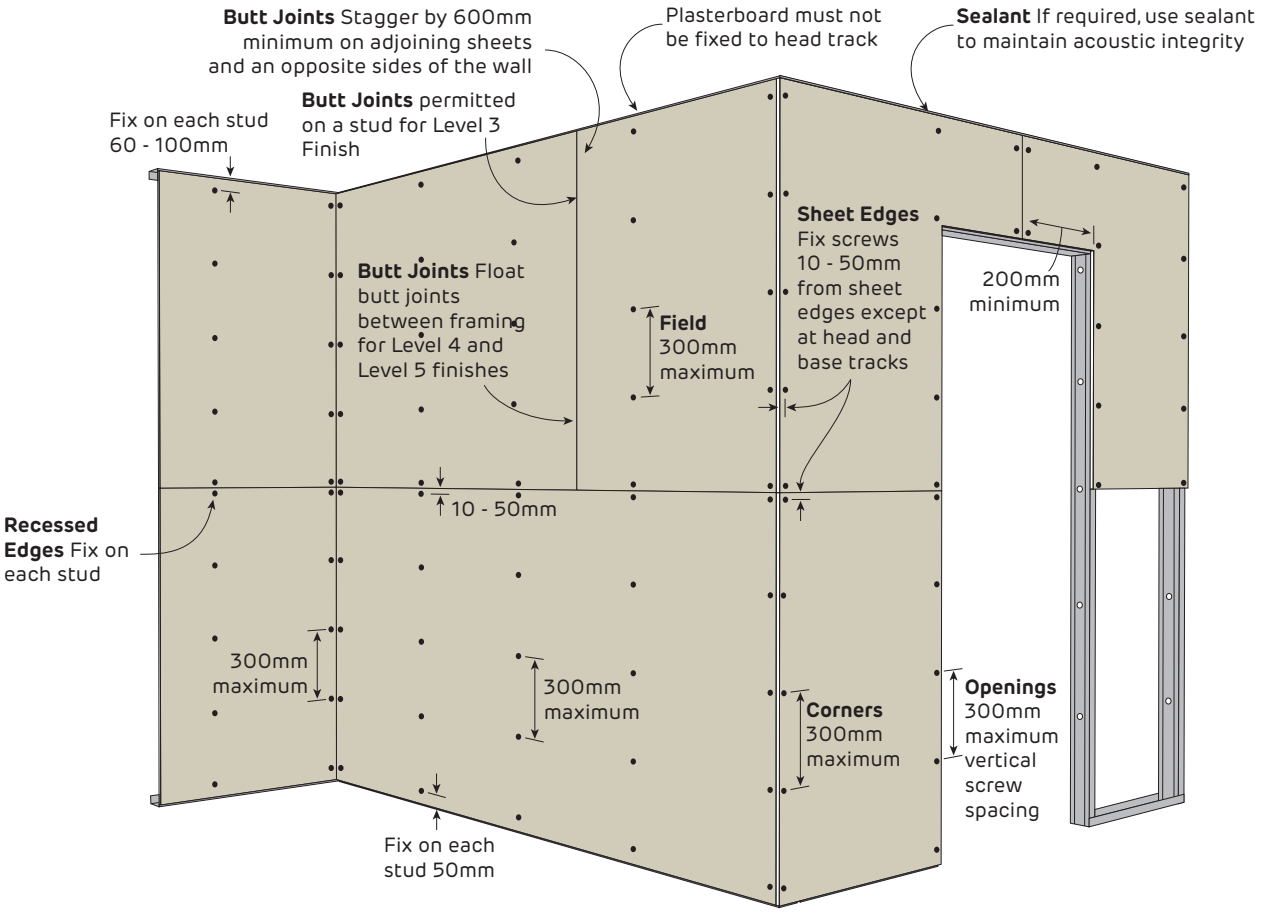

Fixing Pattern Table

Sheet Width	Fixing Pattern
600mm	S S S (3)
900mm	S S S S (4)
1200mm	S S S S S (5)
1350mm	S S S S S S (6)
1400mm	S S S S S S (6)

S = Screw

Maximum Ultimate Limit State Wind Load Table (kPa)

Plasterboard Thickness	Maximum Wall Stud Spacing			
	600mm	450mm	400mm	300mm
10mm	0.75	1.05	1.15	1.55
13mm	0.85	1.15	1.30	1.75
16mm	0.85	1.15	1.30	1.75

1. Calculations do not include the framing which must be independently designed to suit the desired loads.
2. If higher internal wind pressures are expected, please contact Siniat for specific design.

FIGURE 23 Non-Fire Rated 1 Layer - Vertical
Screw and Adhesive Method

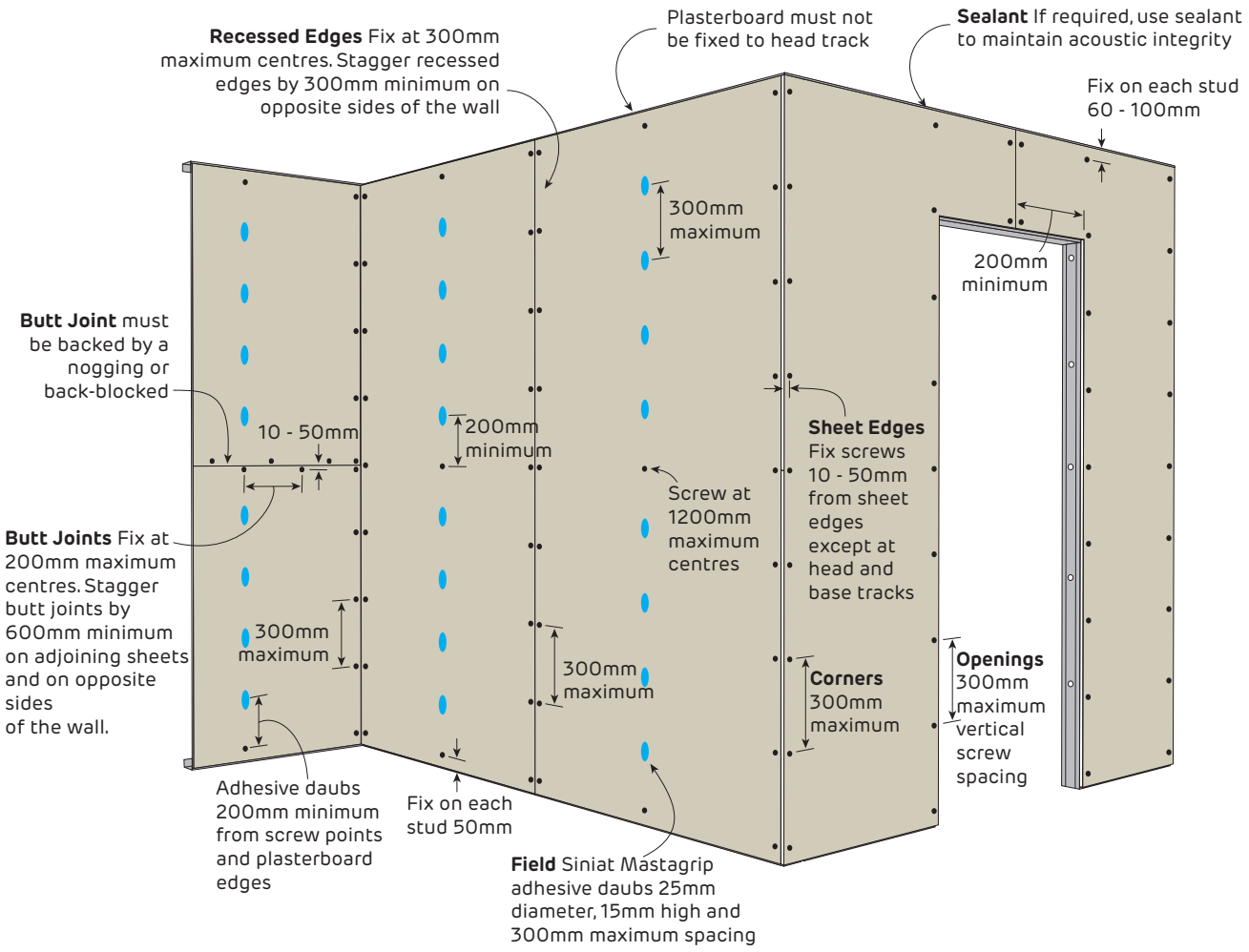

Maximum Ultimate Limit State Wind Load Table (kPa)

Plasterboard Thickness	Maximum Wall Stud Spacing			
	600mm	450mm	400mm	300mm
10mm	0.75	1.00	1.15	1.55
13mm	0.85	1.15	1.30	1.70
16mm	0.85	1.15	1.30	1.70

1. Calculations do not include the framing which must be independently designed to suit the desired loads.
2. If higher internal wind pressures are expected, please contact Siniat for specific design.

FIGURE 24 Non-Fire Rated 1 Layer - Vertical
Screw Only Method

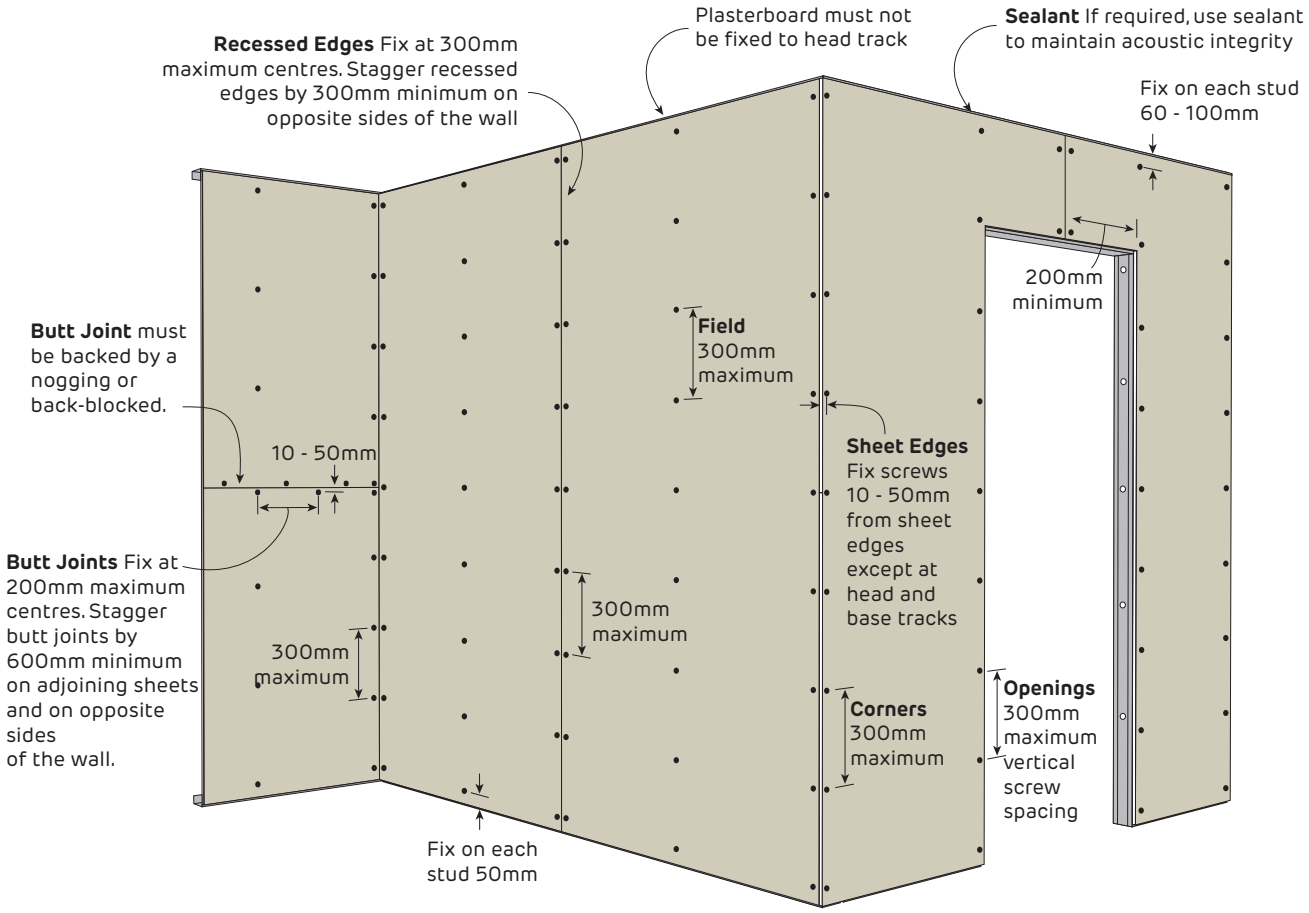

Maximum Ultimate Limit State Wind Load Table (kPa)

Plasterboard Thickness	Maximum Wall Stud Spacing			
	600mm	450mm	400mm	300mm
10mm	0.75	1.00	1.15	1.55
13mm	0.85	1.15	1.30	1.70
16mm	0.85	1.15	1.30	1.70

1. Calculations do not include the framing which must be independently designed to suit the desired loads.
2. If higher internal wind pressures are expected, please contact Siniat for specific design.

FIGURE 25 Non-Fire Rated 2 Layers - Vertical + Vertical
Screw Only Method

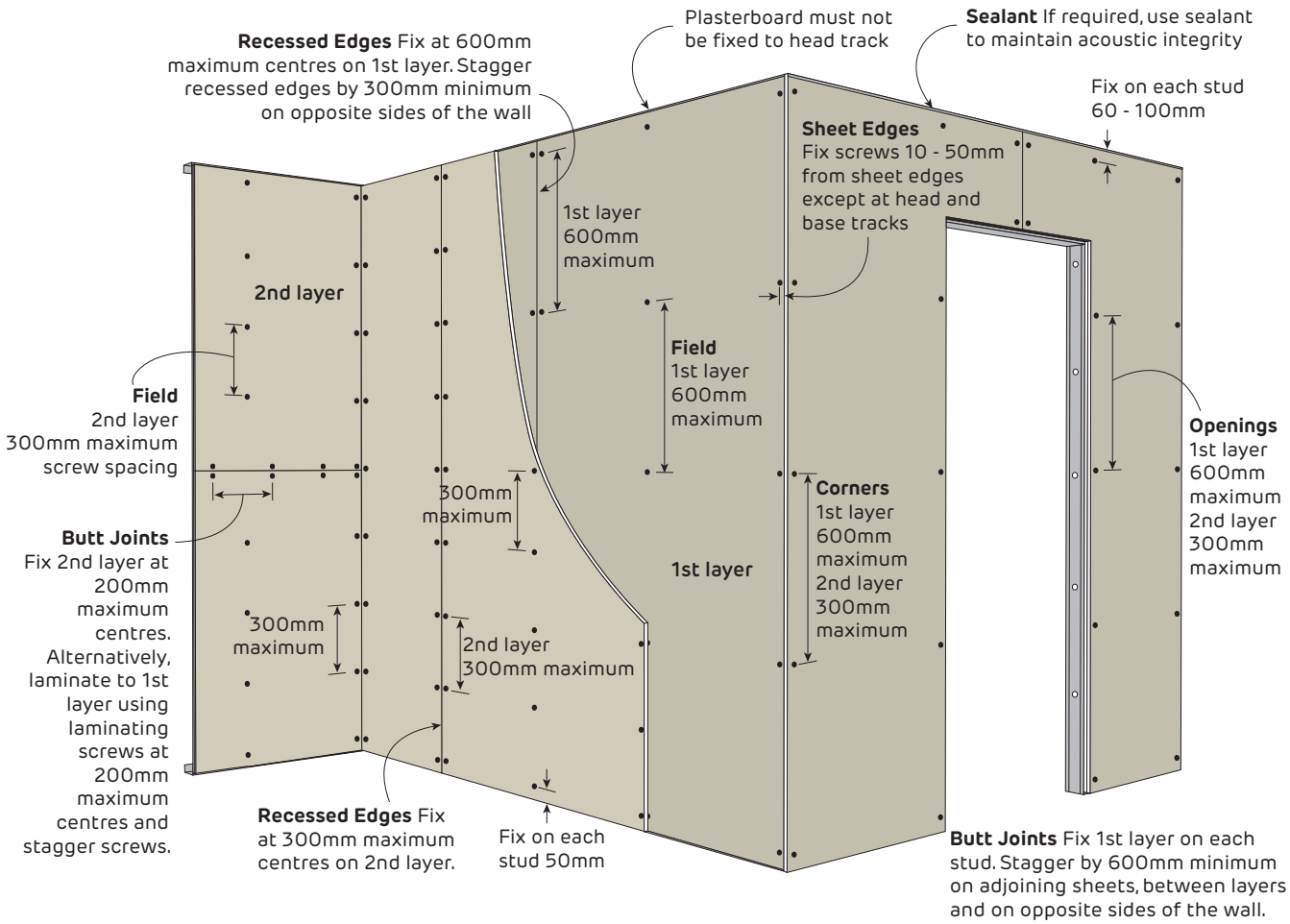

Maximum Ultimate Limit State Wind Load Table (kPa)

Plasterboard Thickness	Maximum Wall Stud Spacing			
	600mm	450mm	400mm	300mm
10mm	0.75	1.00	1.15	1.55
13mm	0.85	1.15	1.30	1.70
16mm	0.85	1.15	1.30	1.70

1. Calculations do not include the framing which must be independently designed to suit the desired loads.
2. If higher internal wind pressures are expected, please contact Siniat for specific design.

FIGURE 26 Fire Rated 1 Layer - Horizontal
Screw Only Method

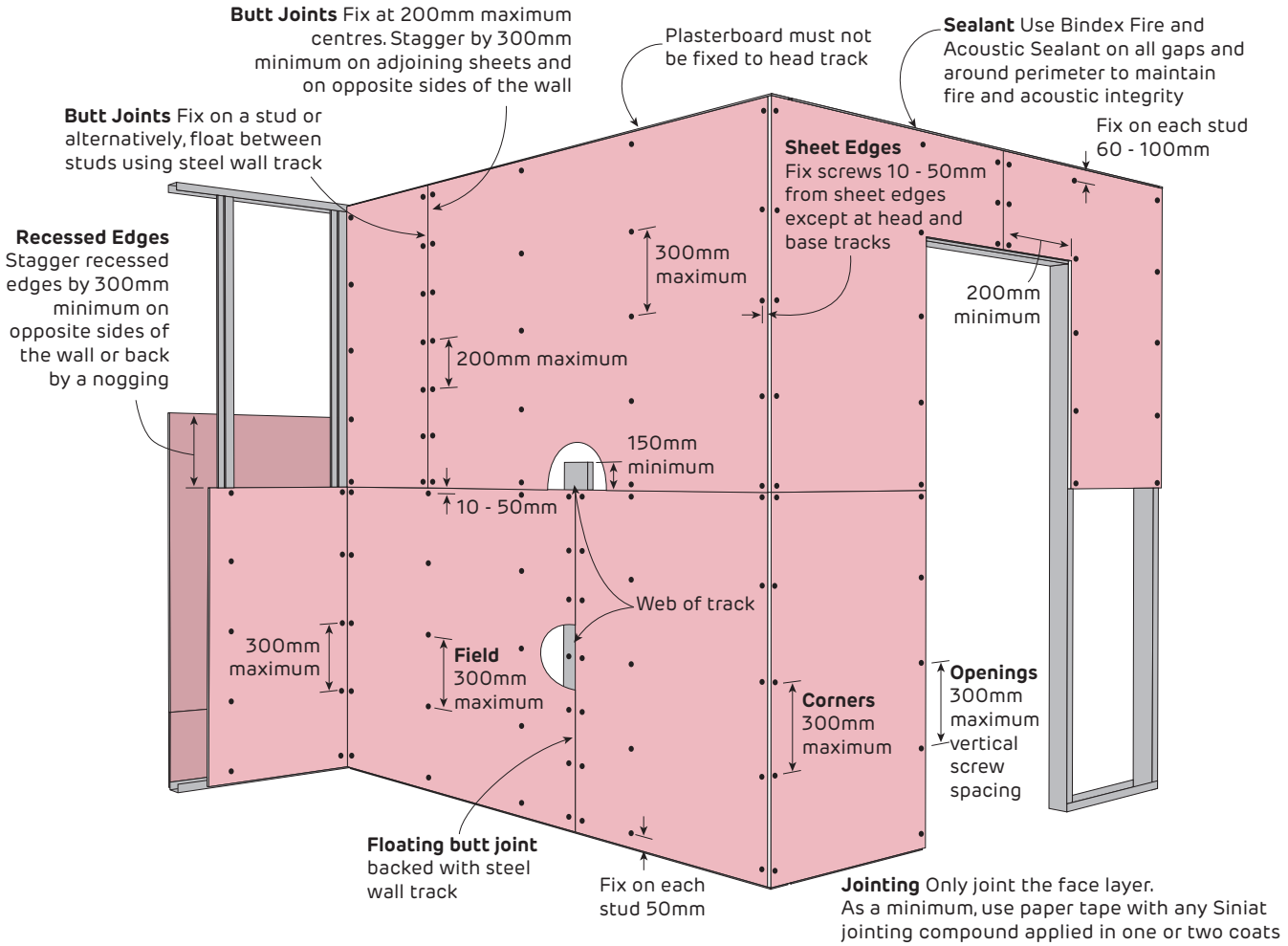

Fixing Pattern Table

Sheet Width	Fixing Pattern
600mm	S S S (3)
900mm	S S S S (4)
1200mm	S S S S S (5)
1350mm	S S S S S S (6)
1400mm	S S S S S S (6)

S = Screw

Maximum Ultimate Limit State Wind Load Table (kPa)

Plasterboard Thickness	Maximum Wall Stud Spacing			
	600mm	450mm	400mm	300mm
13mm	0.85	1.15	1.30	1.70
16mm	0.85	1.15	1.30	1.70

1. Calculations do not include the framing which must be independently designed to suit the desired loads.
2. If higher internal wind pressures are expected, please contact Siniat for specific design.

FIGURE 27 Fire Rated 1 Layer - Horizontal. FRL -/60/60 and 60/60/60 for systems SSW315 and SSW391 only
Screw Only Method

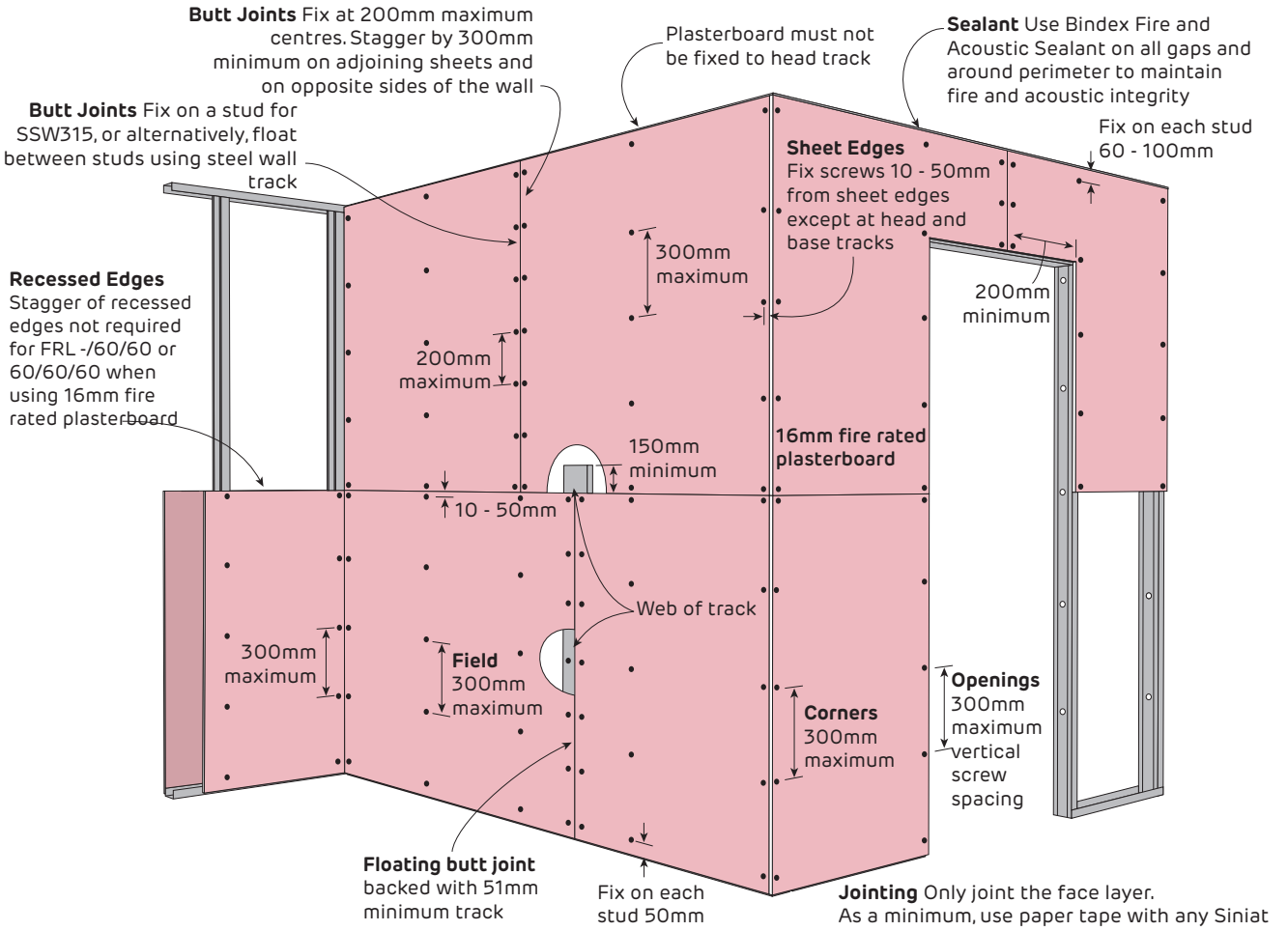

Jointing Only joint the face layer.
As a minimum, use paper tape with any Siniat jointing compound applied in one or two coats to the thickness of two coats. Alternatively, for butt joints only, use Bindex Fire and Acoustic Sealant according to the Product Data Sheet.

Fixing Pattern Table

Sheet Width	Fixing Pattern
600mm	S S S (3)
900mm	S S S S (4)
1200mm	S S S S S (5)
1350mm	S S S S S S (6)
1400mm	S S S S S S (6)

S = Screw

Maximum Ultimate Limit State Wind Load Table (kPa)

Plasterboard Thickness	Maximum Wall Stud Spacing			
	600mm	450mm	400mm	300mm
13mm	0.85	1.15	1.30	1.70
16mm	0.85	1.15	1.30	1.70

1. Calculations do not include the framing which must be independently designed to suit the desired loads.
2. If higher internal wind pressures are expected, please contact Siniat for specific design.

FIGURE 28 Fire Rated 1 Layer - Horizontal. FRL -/60/60 or 60/60/60 for system SSW335 only
Screw Only Method

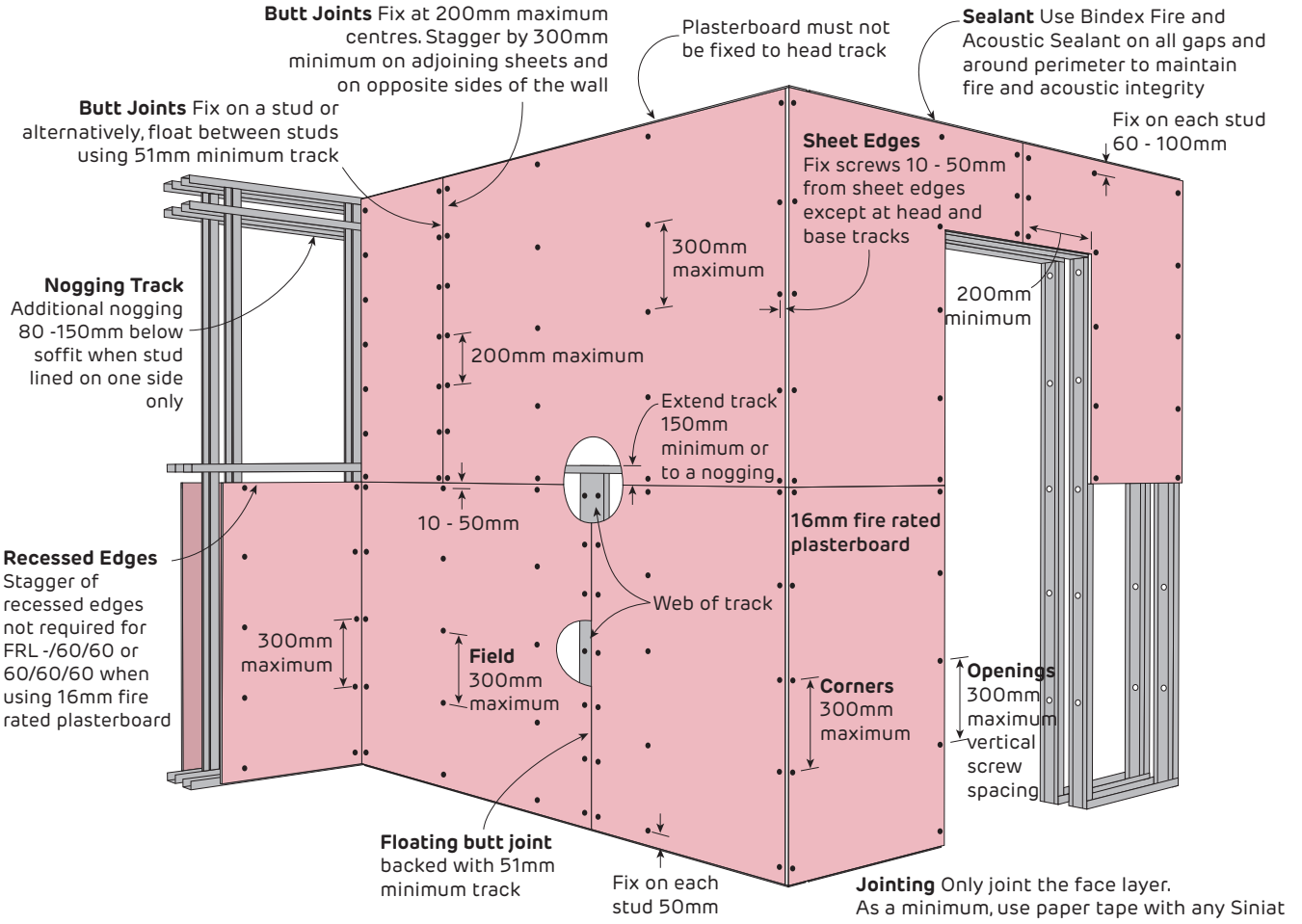

Jointing Only joint the face layer. As a minimum, use paper tape with any Siniat jointing compound applied in one or two coats to the thickness of two coats. Alternatively, for butt joints only, use Bindex Fire and Acoustic Sealant according to the Product Data Sheet.

Fixing Pattern Table

Sheet Width	Fixing Pattern
600mm	S S S (3)
900mm	S S S S (4)
1200mm	S S S S S (5)
1350mm	S S S S S S (6)
1400mm	S S S S S S (6)

S = Screw

Maximum Ultimate Limit State Wind Load Table (kPa)

Plasterboard Thickness	Maximum Wall Stud Spacing			
	600mm	450mm	400mm	300mm
13mm	0.85	1.15	1.30	1.70
16mm	0.85	1.15	1.30	1.70

1. Calculations do not include the framing which must be independently designed to suit the desired loads.
2. If higher internal wind pressures are expected, please contact Siniat for specific design.

FIGURE 29 Fire Rated 2 Layers - Horizontal + Horizontal
Screw Only Method

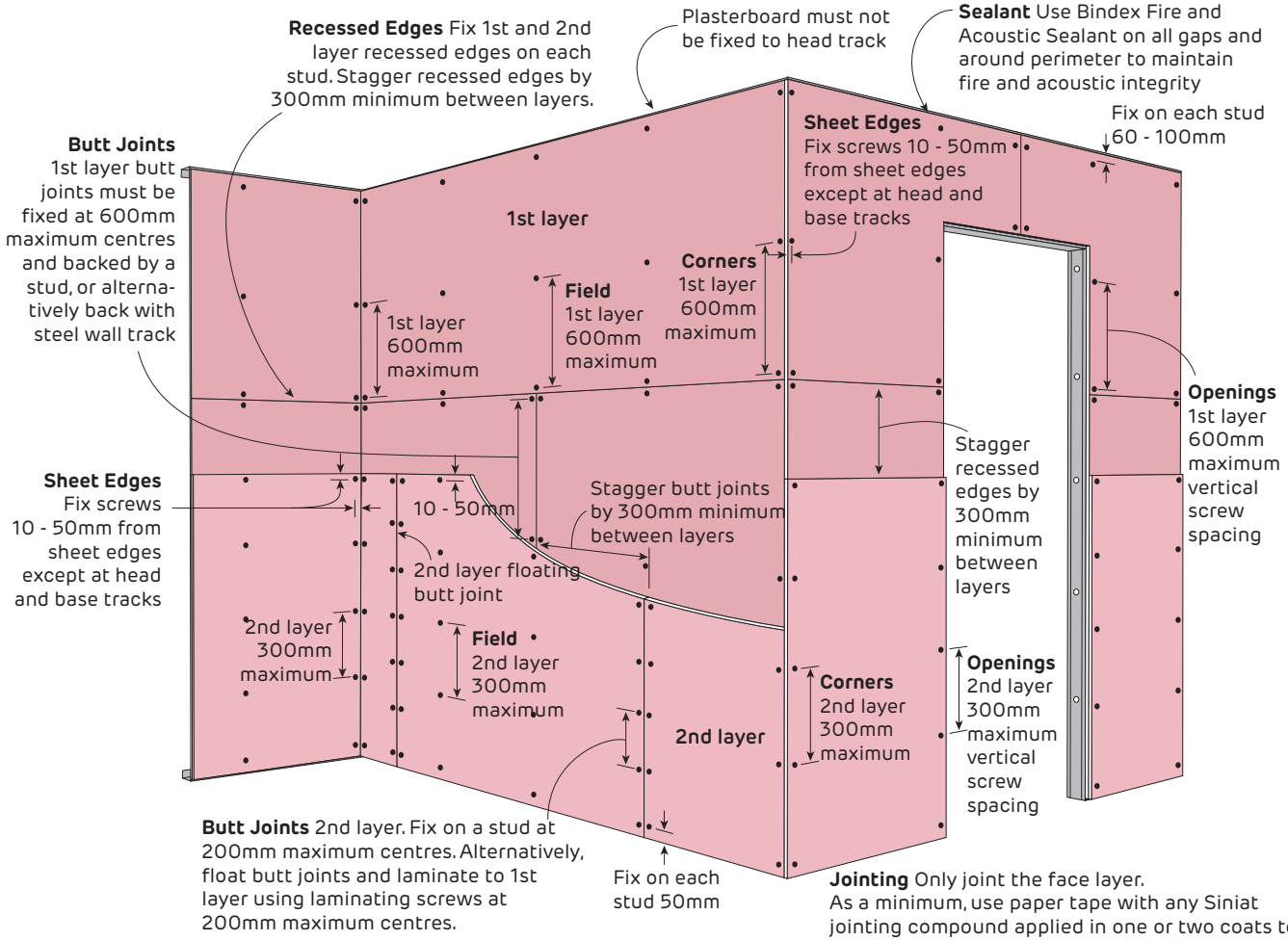

2nd Layer Fixing Pattern Table

Sheet Width	Fixing Pattern
600mm	S S S (3)
900mm	S S S S (4)
1200mm	S S S S S (5)
1350mm	S S S S S S (6)
1400mm	S S S S S S (6)

S = Screw

Maximum Ultimate Limit State Wind Load Table (kPa)

Plasterboard Thickness	Maximum Wall Stud Spacing			
	600mm	450mm	400mm	300mm
13mm	0.85	1.15	1.30	1.70
16mm	0.85	1.15	1.30	1.70

1. Calculations do not include the framing which must be independently designed to suit the desired loads.
2. If higher internal wind pressures are expected, please contact Siniat for specific design.

FIGURE 30 Fire Rated 3 Layers - Horizontal + Horizontal + Horizontal
Screw Only Method

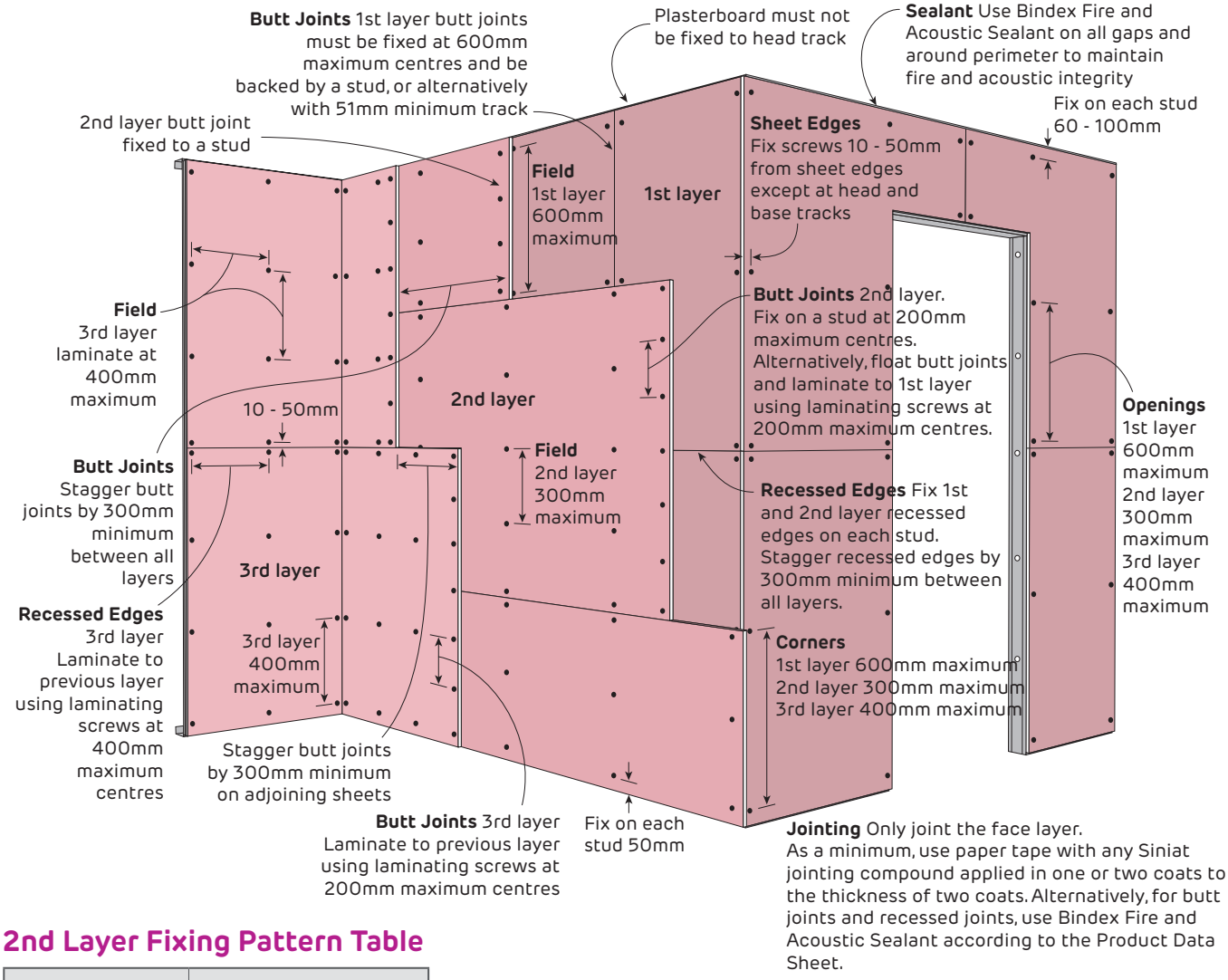

2nd Layer Fixing Pattern Table

Sheet Width	Fixing Pattern
600mm	S S S (3)
900mm	S S S S (4)
1200mm	S S S S S (5)
1350mm	S S S S S S (6)
1400mm	S S S S S S (6)

S = Screw

Maximum Ultimate Limit State Wind Load Table (kPa)

Plasterboard Thickness	Maximum Wall Stud Spacing			
	600mm	450mm	400mm	300mm
13mm	0.65	0.85	0.95	1.30
16mm	0.65	0.85	0.95	1.30

1. Calculations do not include the framing which must be independently designed to suit the desired loads.
2. If higher internal wind pressures are expected, please contact Siniat for specific design.

FIGURE 31 Fire Rated 4 Layers - Horizontal + Horizontal + Horizontal + Horizontal
Screw Only Method

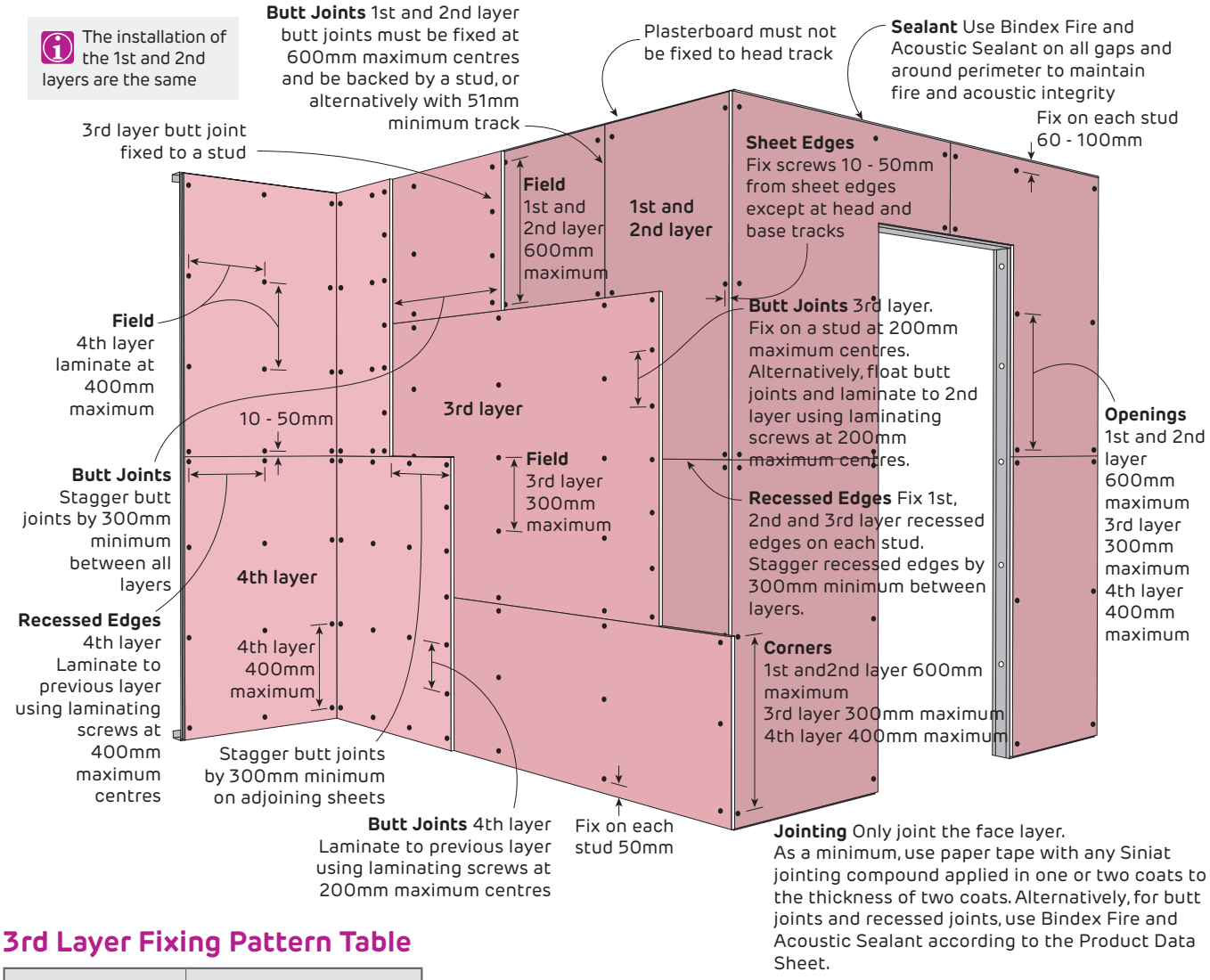

3rd Layer Fixing Pattern Table

Sheet Width	Fixing Pattern
600mm	S S S (3)
900mm	S S S S (4)
1200mm	S S S S S (5)
1350mm	S S S S S S (6)
1400mm	S S S S S S (6)

S = Screw

Maximum Ultimate Limit State Wind Load Table (kPa)

Plasterboard Thickness	Maximum Wall Stud Spacing			
	600mm	450mm	400mm	300mm
13mm	0.65	0.85	0.95	1.30
16mm	0.65	0.85	0.95	1.30

1. Calculations do not include the framing which must be independently designed to suit the desired loads.
2. If higher internal wind pressures are expected, please contact Siniat for specific design.

FIGURE 32 Fire Rated 1 Layer - Vertical
Screw Only Method

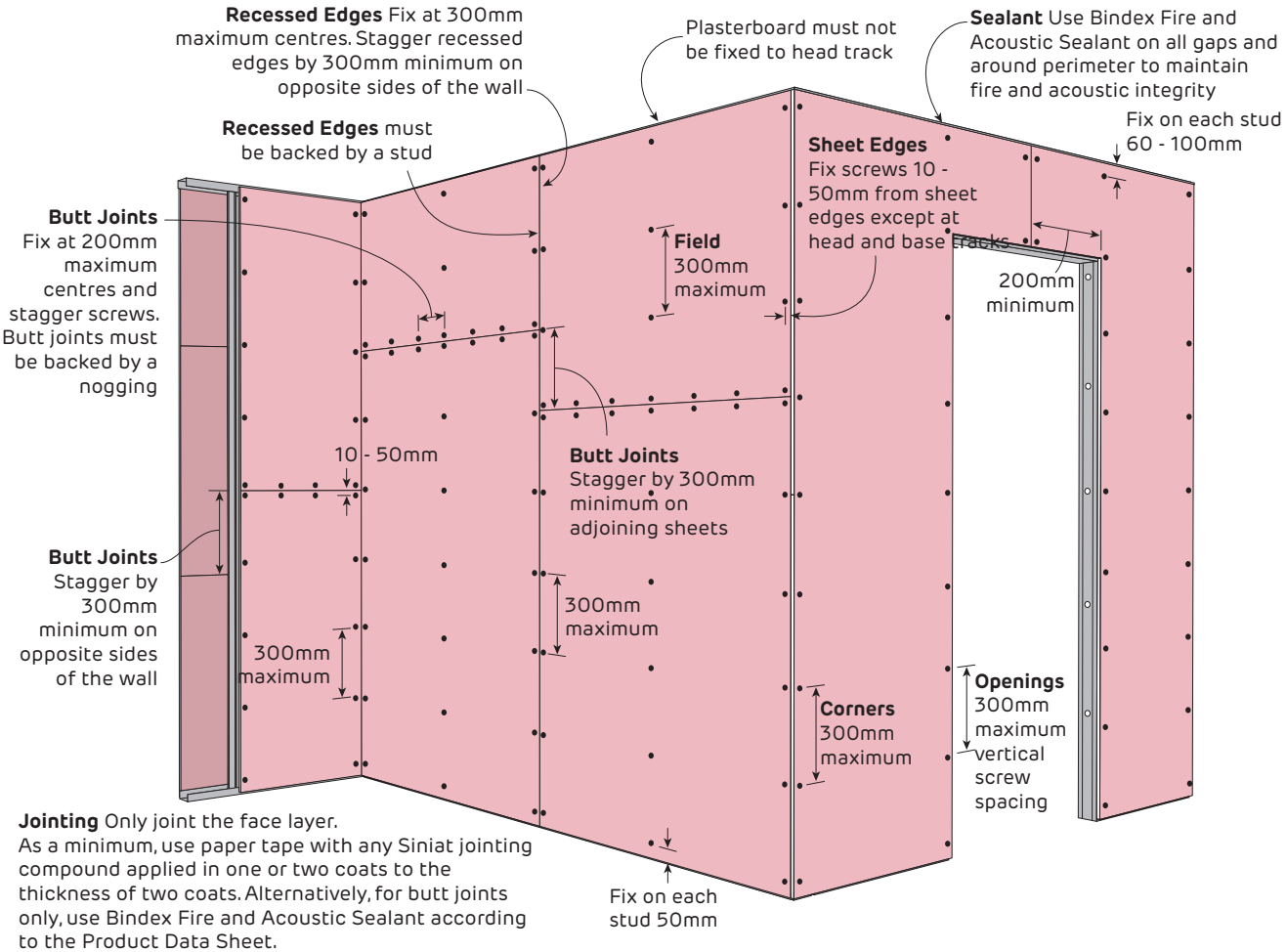

Maximum Ultimate Limit State Wind Load Table (kPa)

Plasterboard Thickness	Maximum Wall Stud Spacing			
	600mm	450mm	400mm	300mm
13mm	0.85	1.15	1.30	1.70
16mm	0.85	1.15	1.30	1.70

1. Calculations do not include the framing which must be independently designed to suit the desired loads.
2. If higher internal wind pressures are expected, please contact Siniat for specific design.

FIGURE 33 Fire Rated 2 Layers - Vertical + Vertical
Screw Only Method

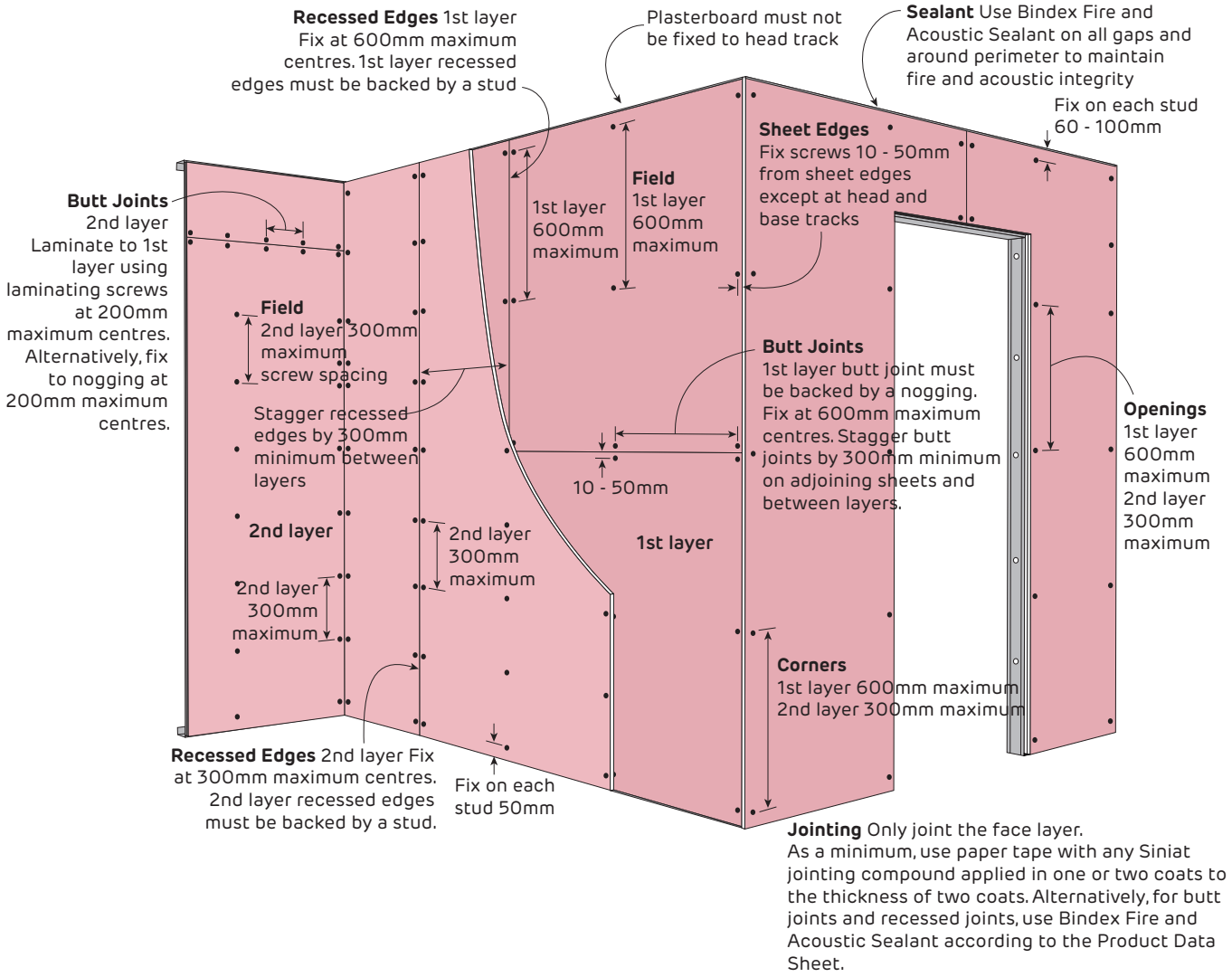

Maximum Ultimate Limit State Wind Load Table (kPa)

Plasterboard Thickness	Maximum Wall Stud Spacing			
	600mm	450mm	400mm	300mm
13mm	0.85	1.15	1.30	1.70
16mm	0.85	1.15	1.30	1.70

1. Calculations do not include the framing which must be independently designed to suit the desired loads.
2. If higher internal wind pressures are expected, please contact Siniat for specific design.

FIGURE 34 Fire Rated 3 Layers - Vertical + Vertical + Vertical
Screw Only Method

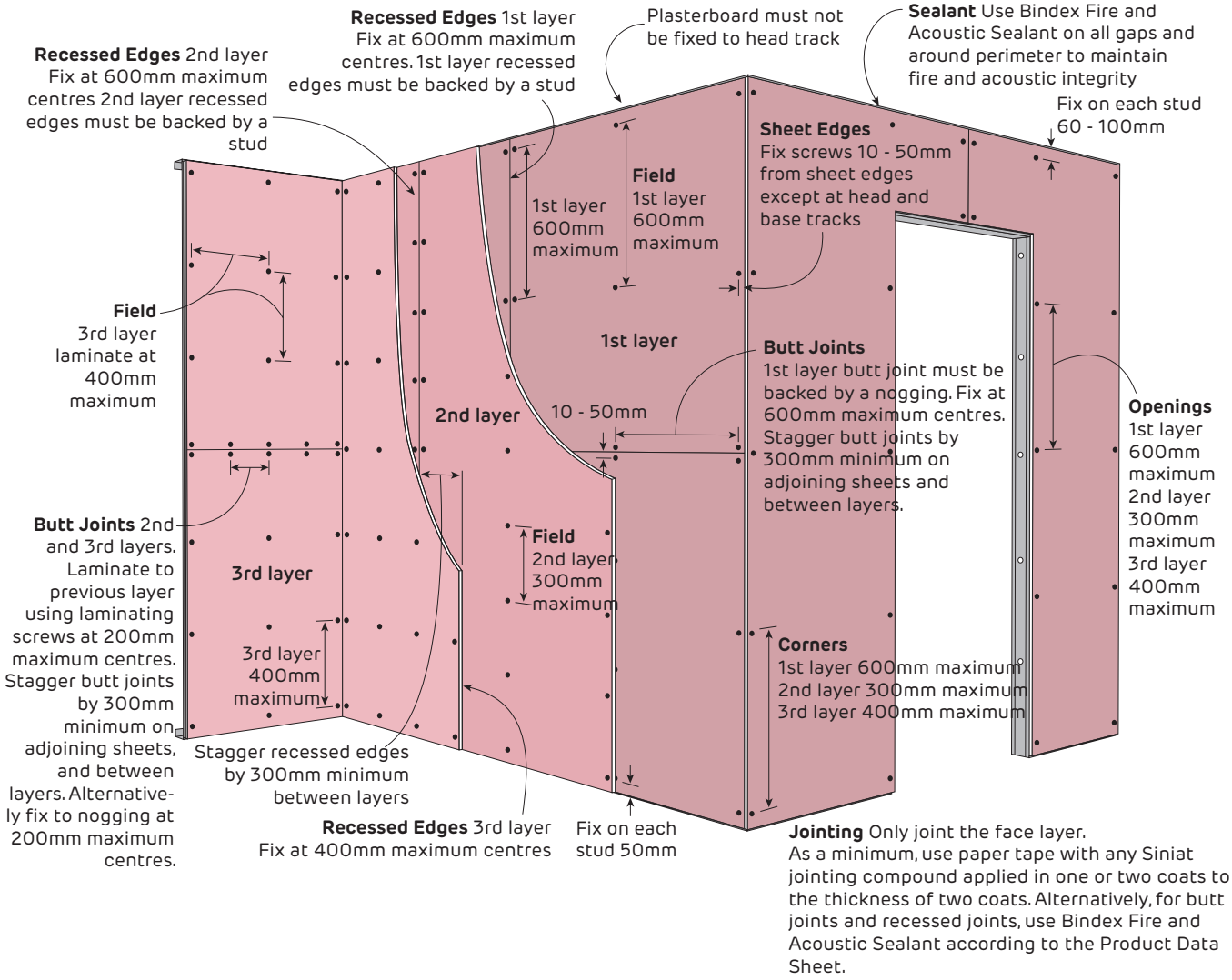

Maximum Ultimate Limit State Wind Load Table (kPa)

Plasterboard Thickness	Maximum Wall Stud Spacing			
	600mm	450mm	400mm	300mm
13mm	0.65	0.85	0.95	1.30
16mm	0.65	0.85	0.95	1.30

1. Calculations do not include the framing which must be independently designed to suit the desired loads.
2. If higher internal wind pressures are expected, please contact Siniat for specific design.

Non-Fire Rated
Head and Base Details for Internal Stud Walls - Lined Full Height

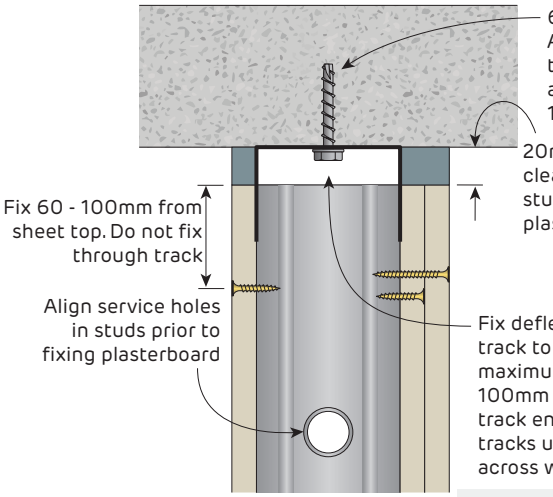

FIGURE 35 Wall Head
Deflection Head Track
Section

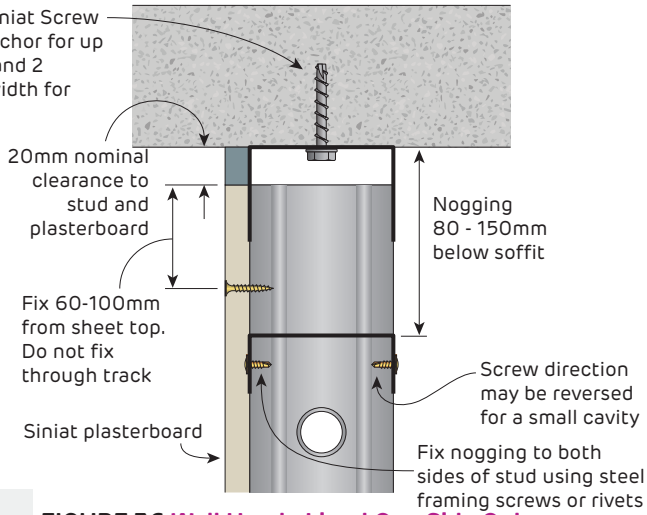

FIGURE 36 Wall Head - Lined One Side Only
Deflection Head Track
Section

Do not rigidly fix cornice to non-load bearing wall head and soffit, as slab deflection is expected.

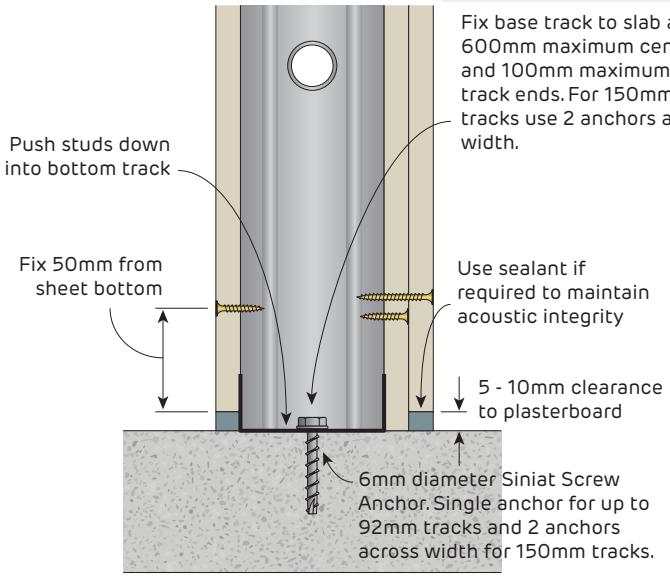

FIGURE 37 Wall Base
Section

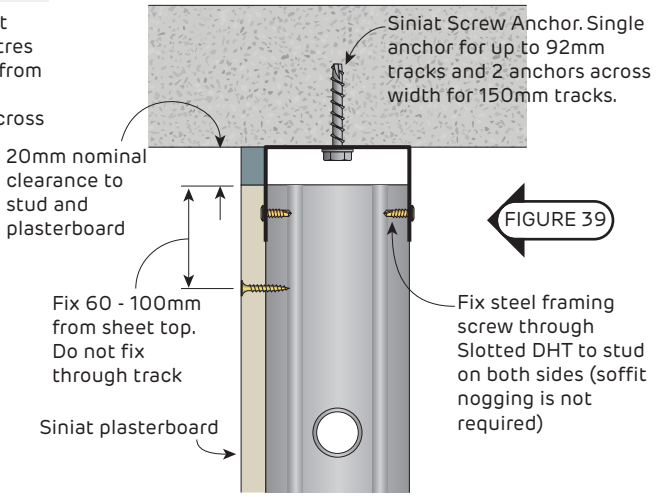

FIGURE 38 Wall Head - Lined One Side Only
Slotted Deflection Head Track
Section

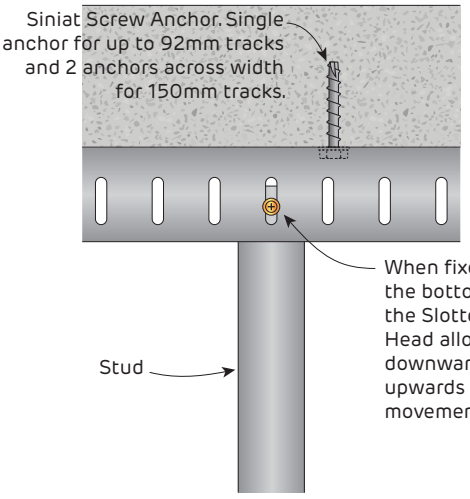

FIGURE 39 Wall Head
Slotted Deflection Head Track
Elevation

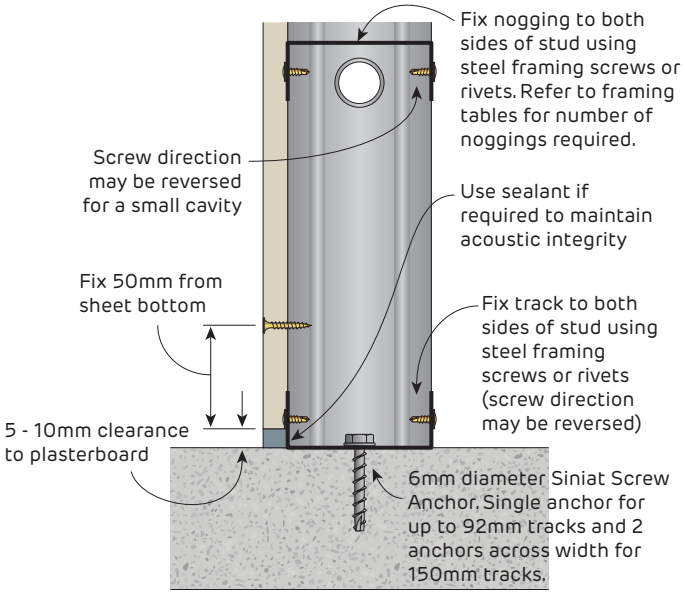

FIGURE 40 Wall Base - Lined One Side Only
Section

Non-Fire Rated
Head and Base Details for Internal Stud Walls - Partially Lined

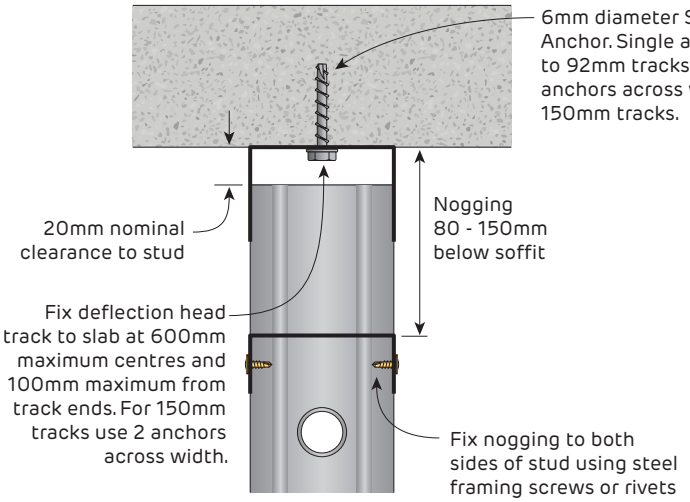

FIGURE 41 Wall Head - Partially Lined Wall
Option 1 - Deflection Head Track
Section

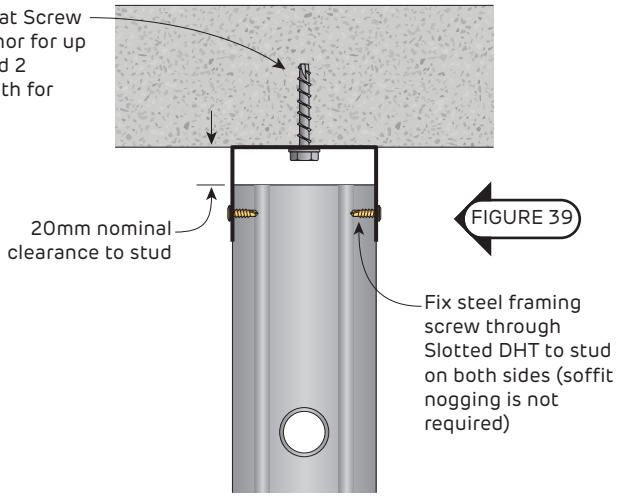

FIGURE 42 Wall Head - Partially Lined Wall
Option 2 - Slotted Deflection Head Track
Section

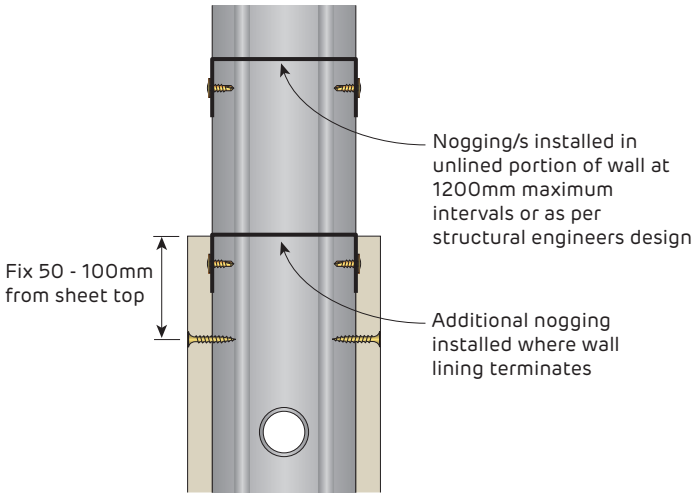

FIGURE 43 Partially Lined Wall
Lined on both sides
Section

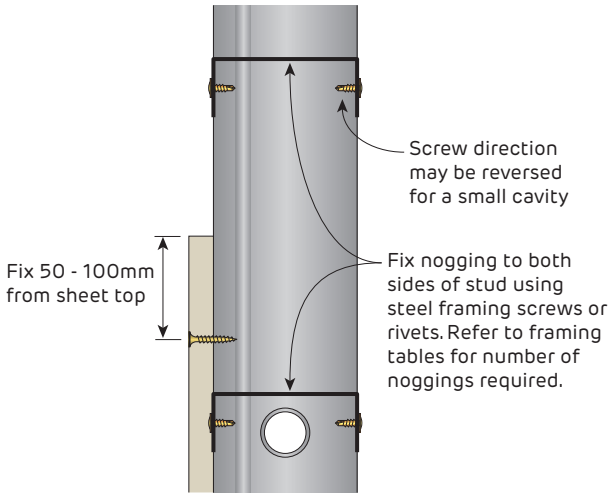

FIGURE 44 Partially Lined Wall
Lined on one side only
Section

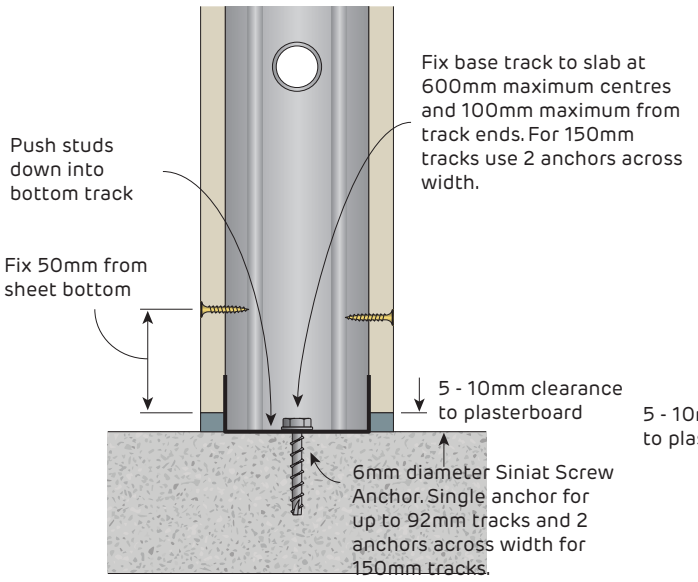

FIGURE 45 Wall Base
Section

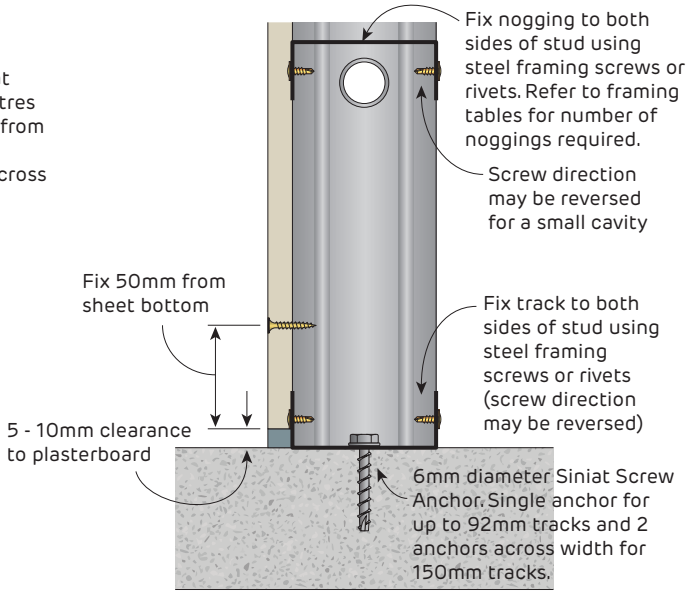

FIGURE 46 Wall Base - Lined One Side Only
Section

Non-Fire Rated
Head Finishing Details for Internal Stud Walls

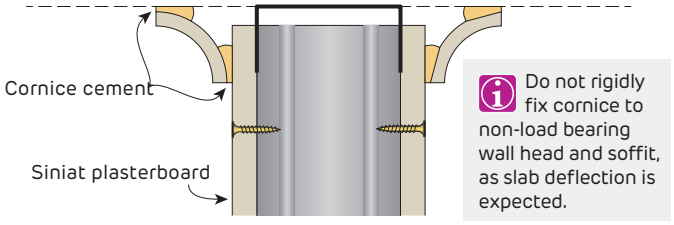

FIGURE 47 Wall Head - Cornice
Section

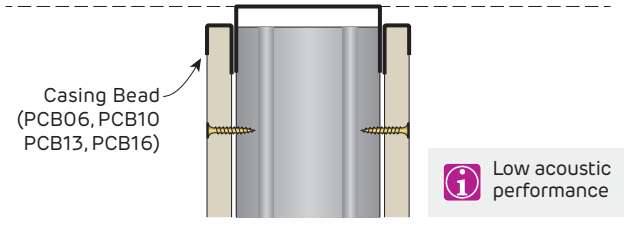

FIGURE 48 Wall Head - Casing Bead
Section

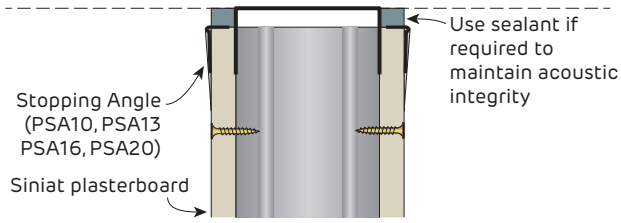

FIGURE 49 Wall Head - Stopping Angle
Section

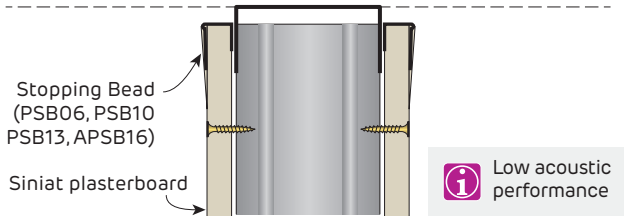

FIGURE 50 Wall Head - Stopping Bead
Section

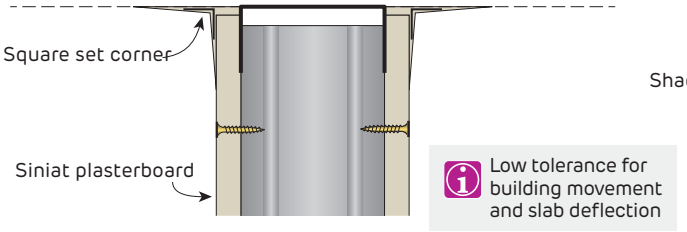

FIGURE 51 Wall Head - Square Set
Section

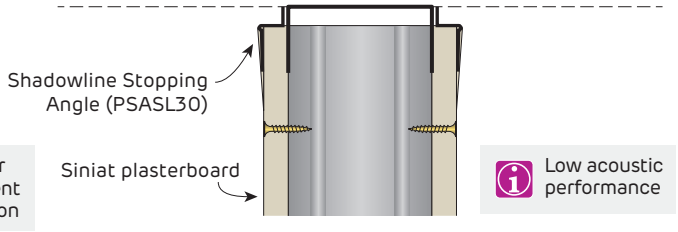

FIGURE 52 Wall Head - Shadowline Stopping Angle
Section

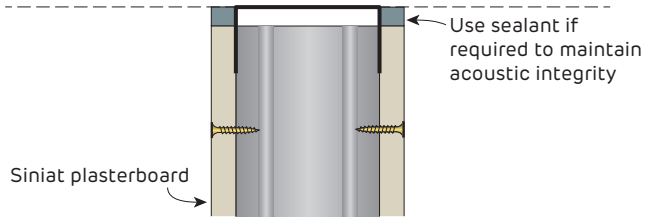

FIGURE 53 Wall Head - Bare finish with sealant
Section

Non-Fire Rated
Internal Stud Walls

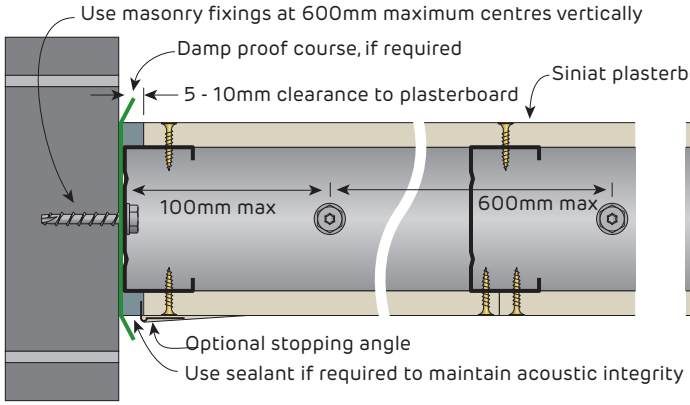

FIGURE 54 Wall End To Masonry
Plan

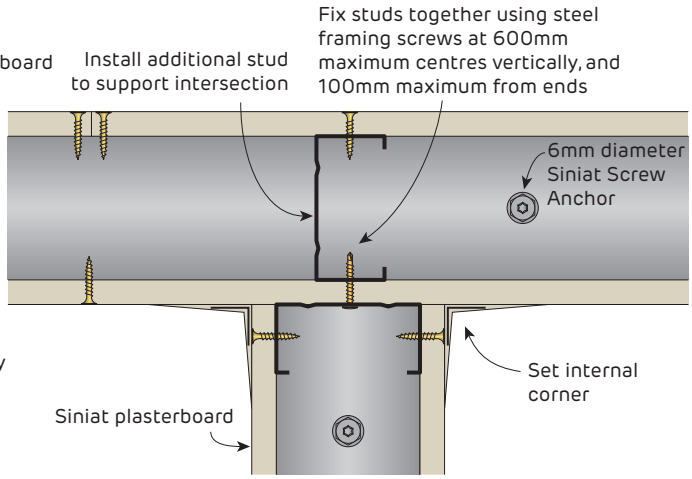

FIGURE 55 Intersecting Wall
Plan

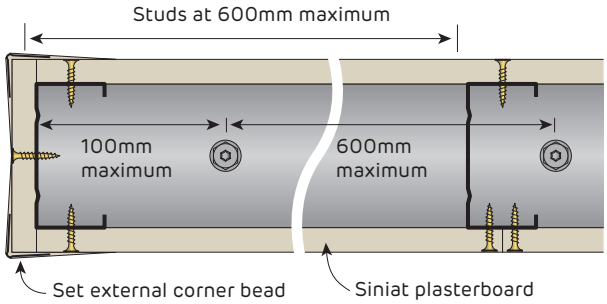

FIGURE 56 Wall End
Plan

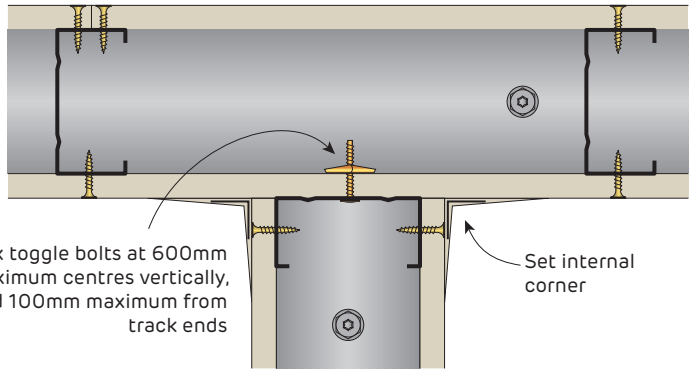

FIGURE 57 Intersecting Wall
Plan

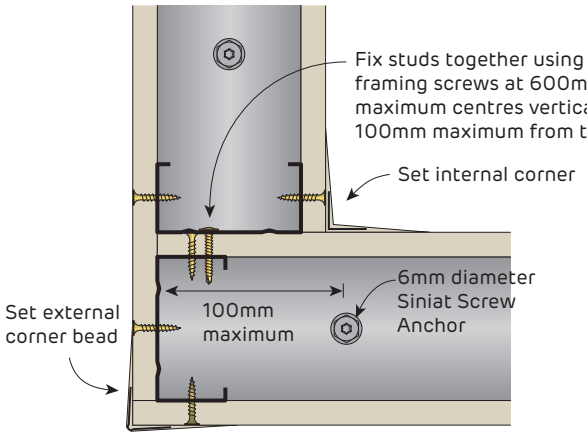

FIGURE 58 Wall Corner
Plan

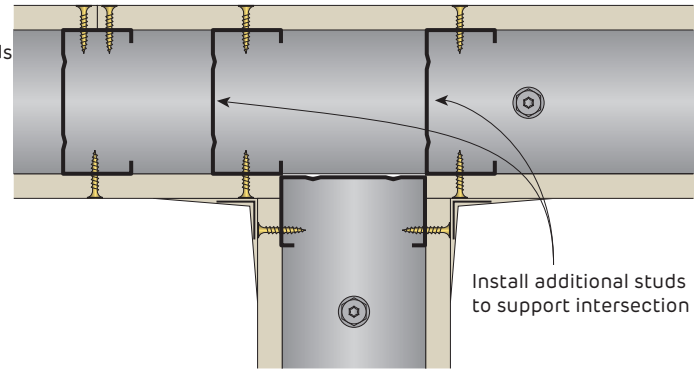

FIGURE 59 Intersecting Wall
Plan

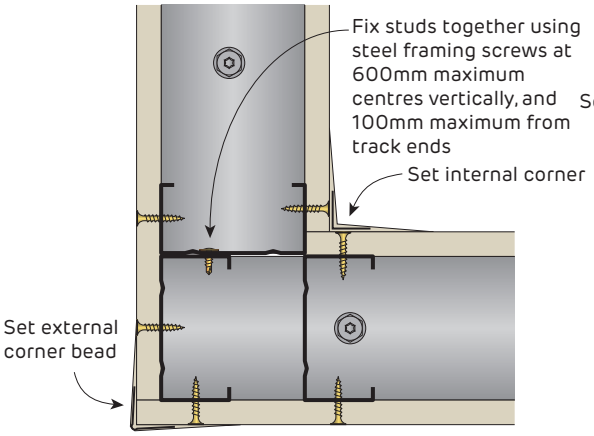

FIGURE 60 Wall Corner
Plan

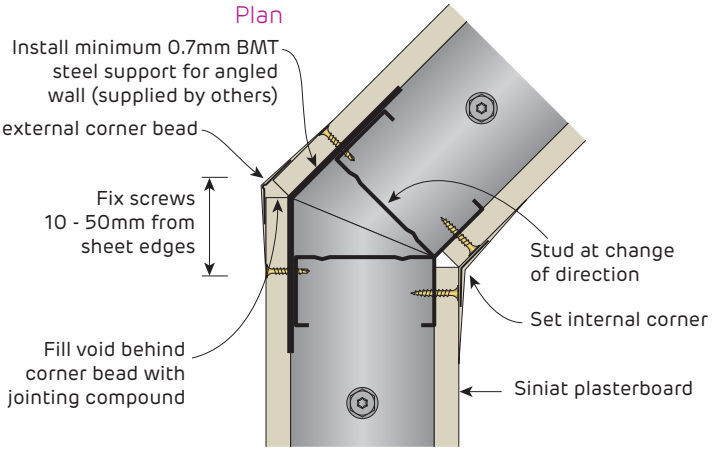

FIGURE 61 Obtuse Angle Corner
Plan

Fire Rated

Head and Base Details for Internal Stud Walls - Lined Full Height - Single Layer

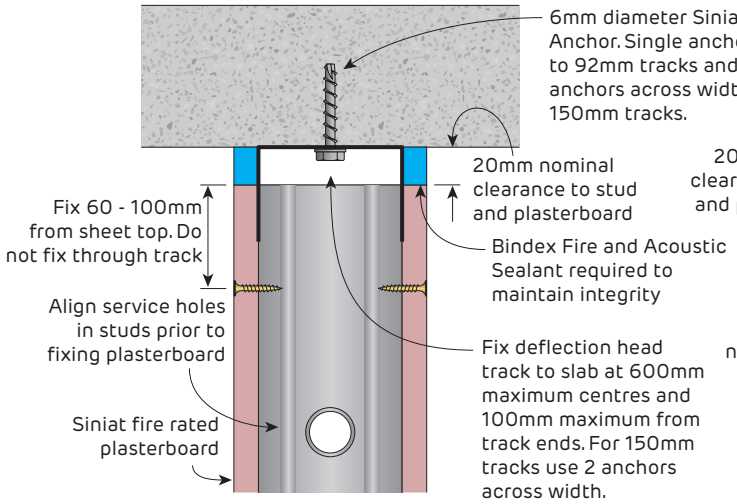

FIGURE 62 Wall Head
Deflection Head Track
Section

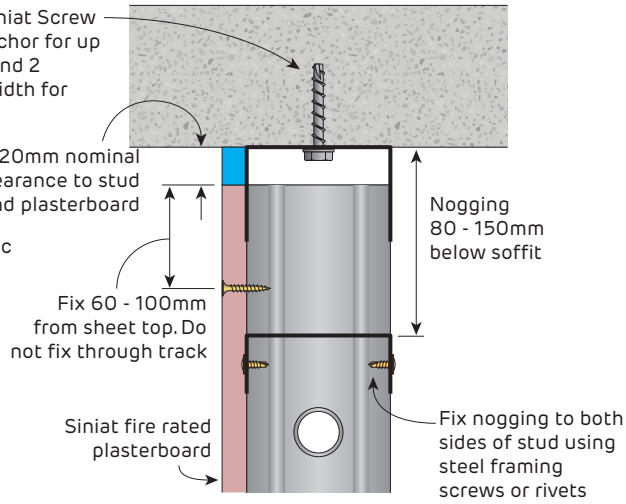

FIGURE 63 Wall Head - Lined One Side Only
Deflection Head Track
Section

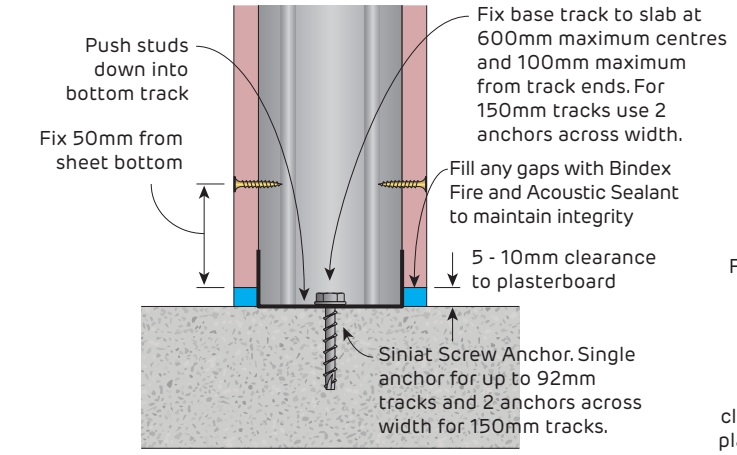

FIGURE 64 Wall Base
Section

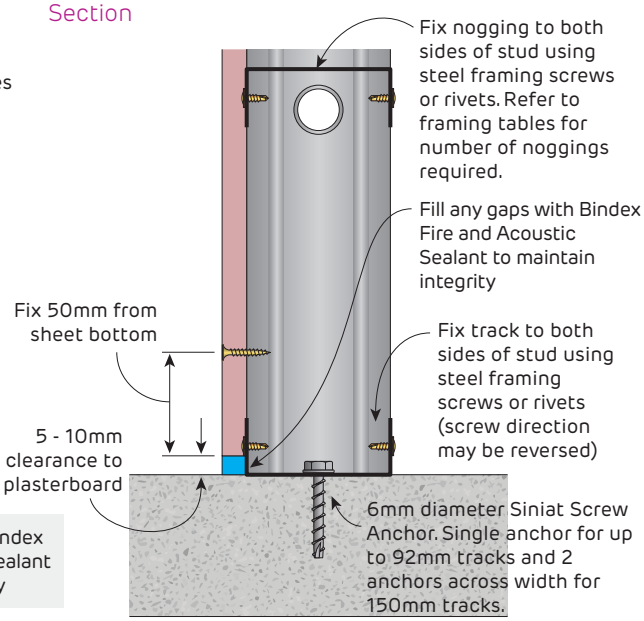

FIGURE 65 Wall Base - Lined One Side Only
Section

Fill any gaps with Bindex Fire and Acoustic Sealant to maintain integrity

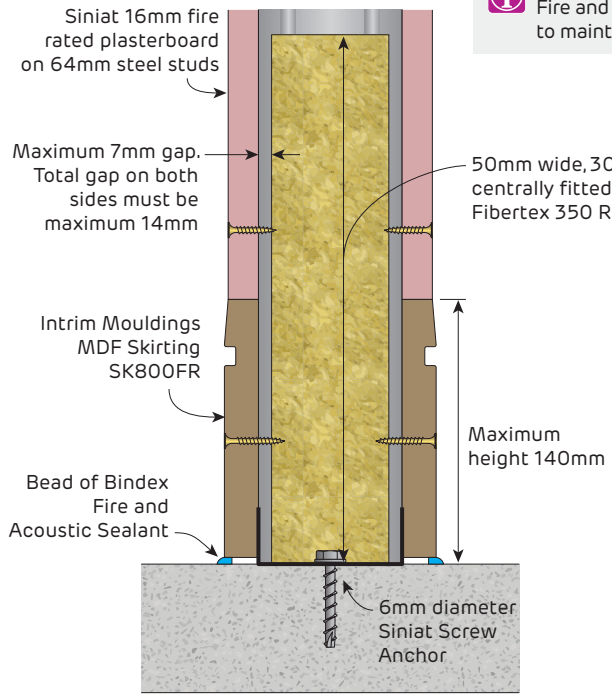

FIGURE 66 Wall Base with MDF Skirting
FRL -/60/60 FC03351 Rev A - Section

Outermost plasterboard sheets with no gap at the base are at risk of moisture wicking

Fire Rated

Head and Base Details for Internal Stud Walls - Lined Full Height - Up to 2 Layers

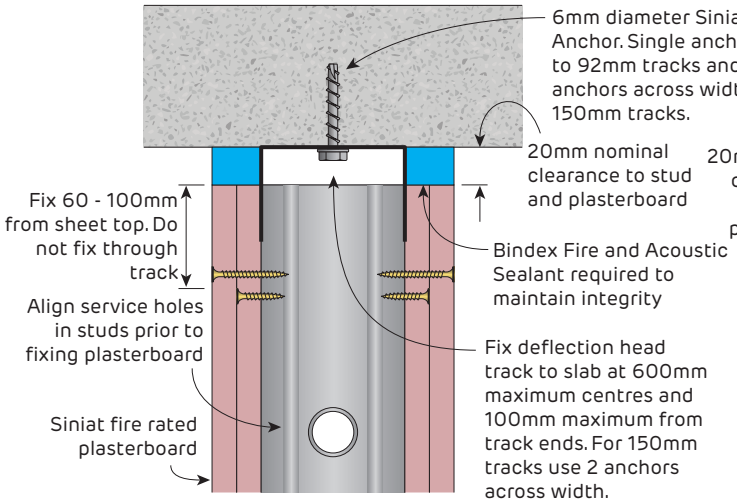

FIGURE 67 Wall Head
Deflection Head Track
Up to 2 layers on either side - Section

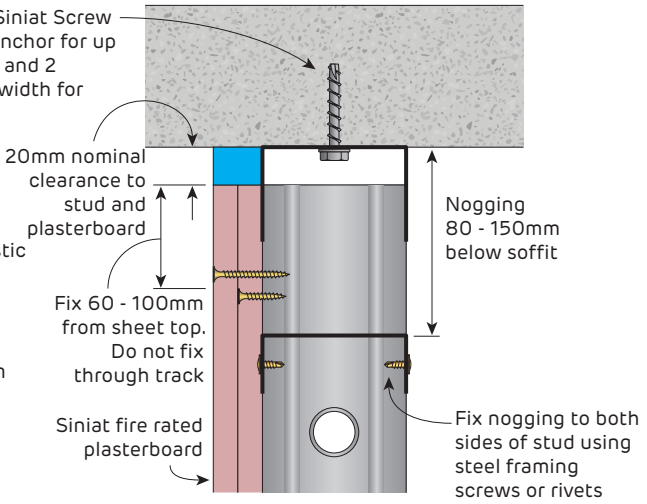

FIGURE 68 Wall Head - Lined One Side Only
Deflection Head Track
Up to 2 layers - Section

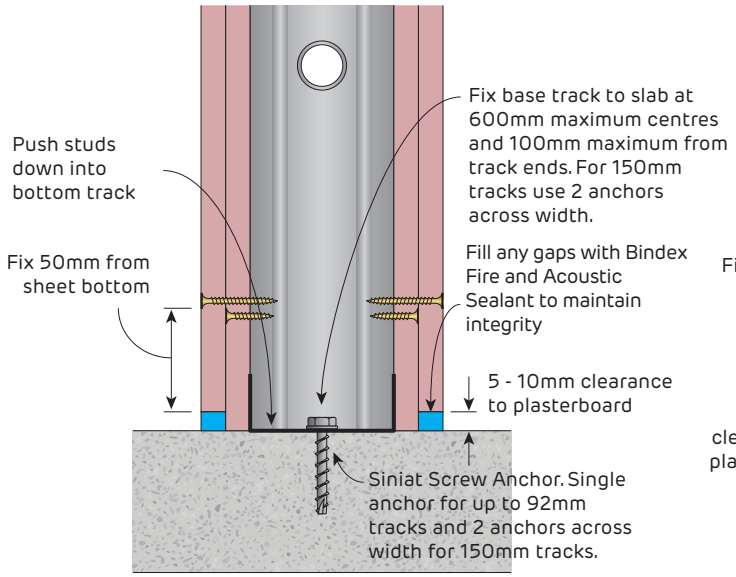

FIGURE 69 Wall Base
Up to 2 layers on either side
Section

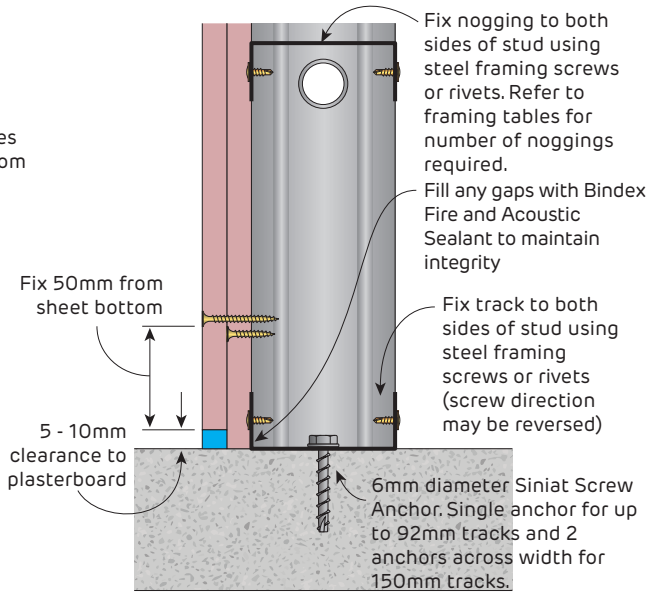

FIGURE 70 Wall Base - Lined One Side Only
Up to 2 layers
Section

Fill any gaps with Bindex Fire and Acoustic Sealant to maintain integrity

Outermost plasterboard sheets with no gap at the base are at risk of moisture wicking

Fire Rated

Head and Base Details for Internal Stud Walls - Lined Full Height - Up to 3 Layers

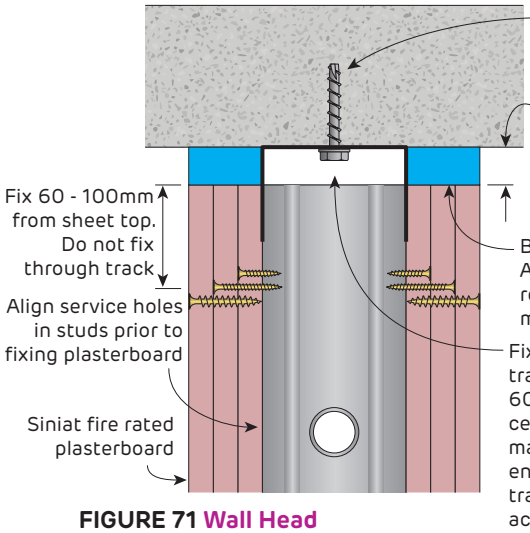

FIGURE 71 Wall Head
Deflection Head Track
Up to 3 layers on either side - Section

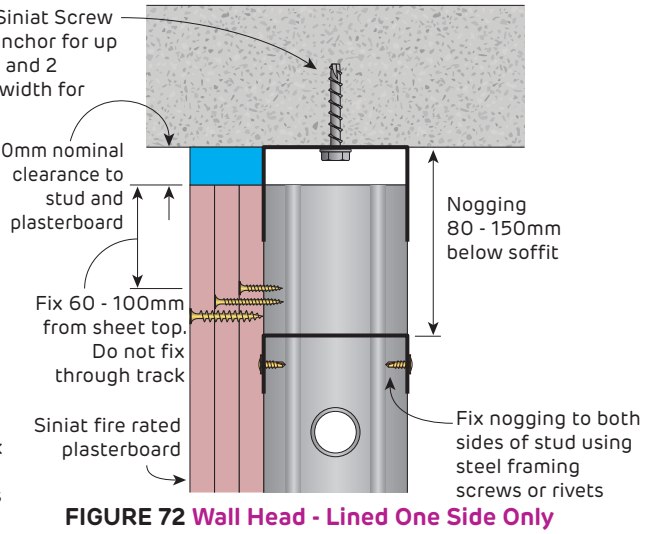

FIGURE 72 Wall Head - Lined One Side Only
Deflection Head Track
Up to 3 layers - Section

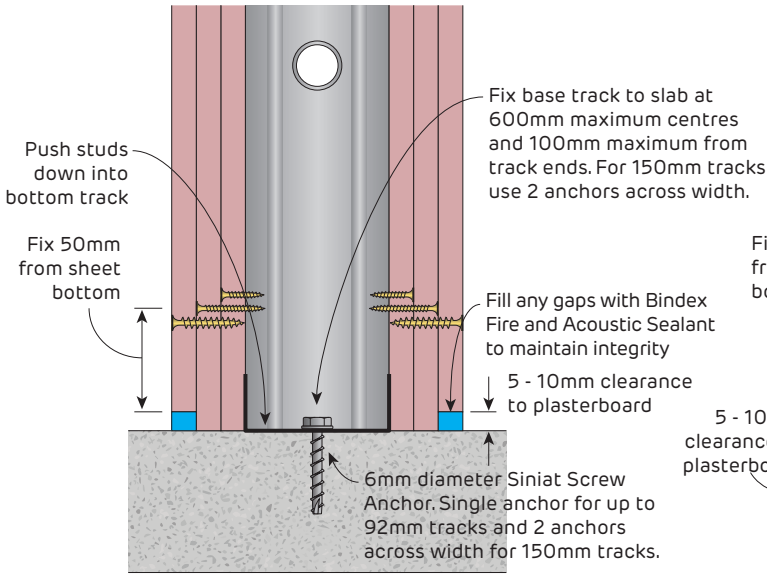

FIGURE 73 Wall Base
Up to 3 layers on either side
Section

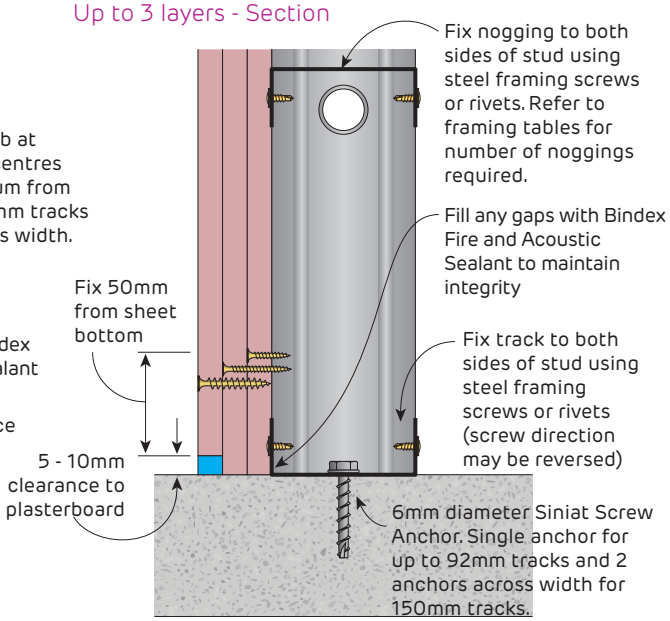

FIGURE 74 Wall Base - Lined One Side Only
Up to 3 layers
Section

Fill any gaps with Bindex Fire and Acoustic Sealant to maintain integrity

Outermost plasterboard sheets with no gap at the base are at risk of wicking

Fire Rated

Head and Base Details for Internal Stud Walls - Lined Full Height - Up to 3 Layers

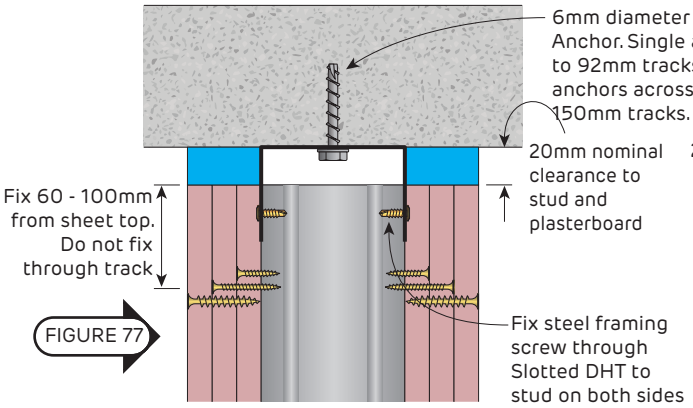

FIGURE 75 Wall Head
Slotted Deflection Head Track
Up to 3 layers on either side - Section

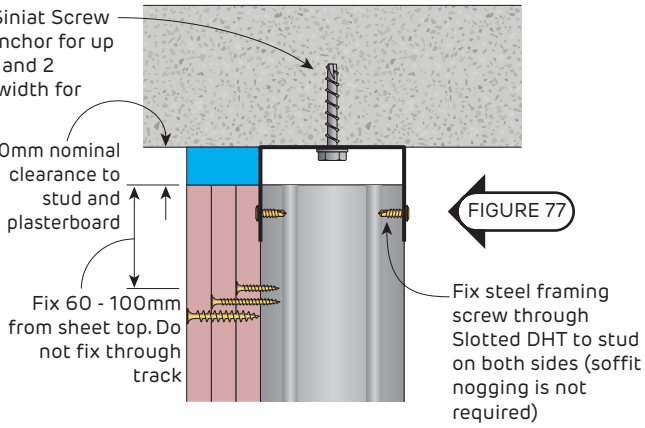

FIGURE 76 Wall Head - Lined One Side Only
Slotted Deflection Head Track
Up to 3 layers - Section

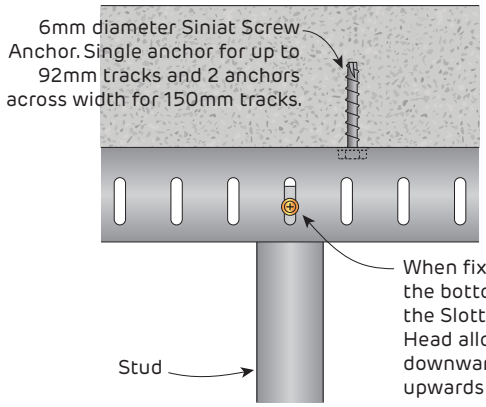

FIGURE 77 Wall Head
Slotted Deflection Head Track
Elevation

Fill any gaps with Bindex Fire and Acoustic Sealant to maintain integrity

Head Finishing Details for Internal Stud Walls

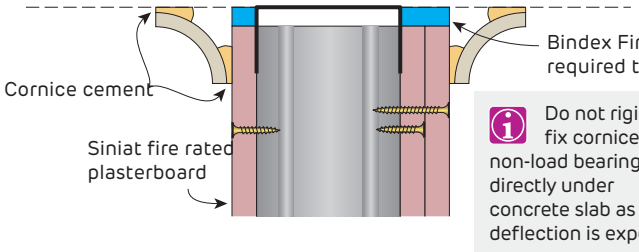

Do not rigidly fix cornice to non-load bearing wall directly under concrete slab as deflection is expected.

FIGURE 78 Wall Head - Cornice
Section

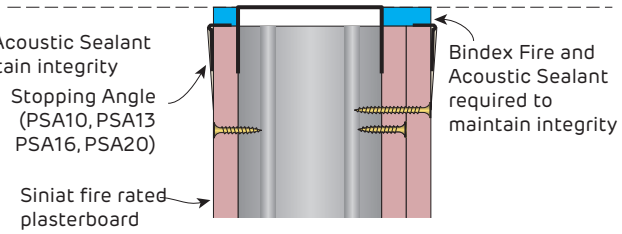

FIGURE 79 Wall Head - Stopping Angle
Section

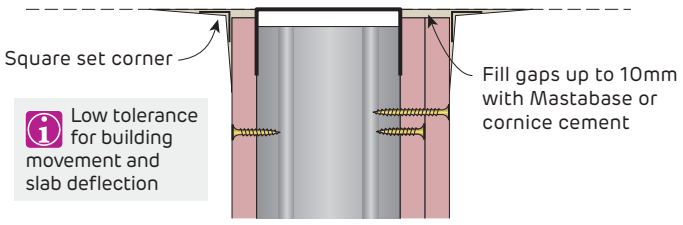

Low tolerance for building movement and slab deflection

FIGURE 80 Wall Head - Square Set
Section

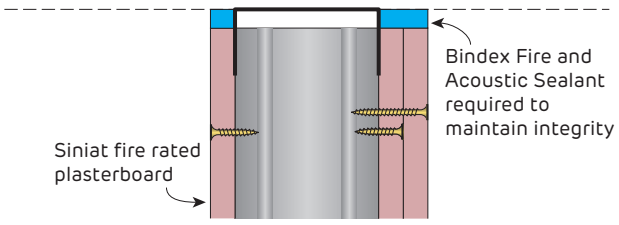

FIGURE 81 Wall Head - Bare finish with sealant
Section

Fire Rated
Internal Stud Walls

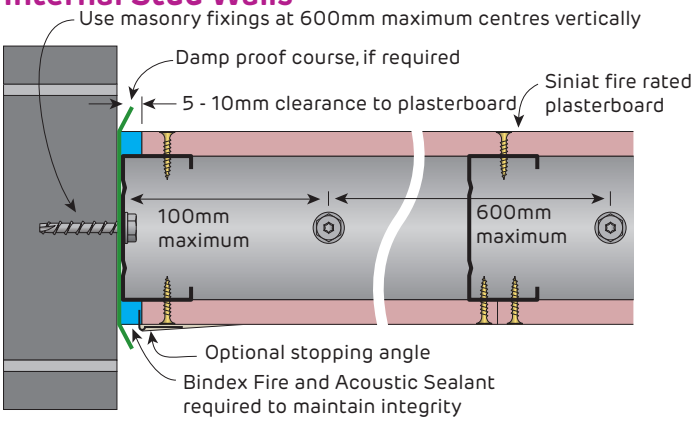

FIGURE 82 Wall End To Masonry
Plan

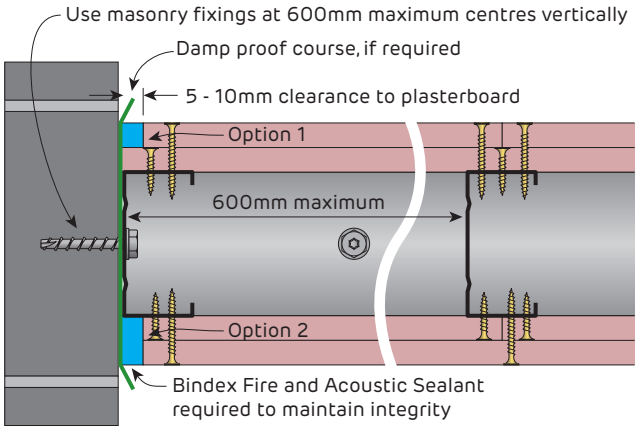

FIGURE 83 Wall End To Masonry
Plan

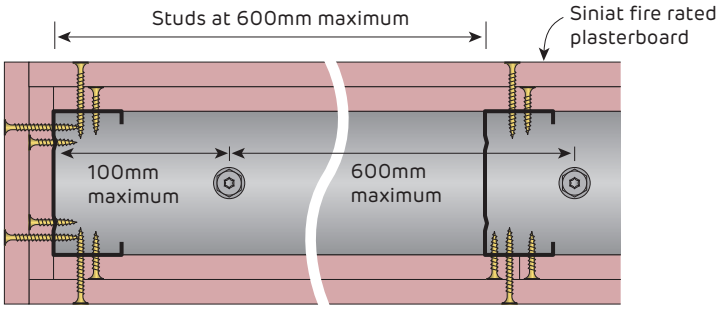

FIGURE 84 Wall End
Plan

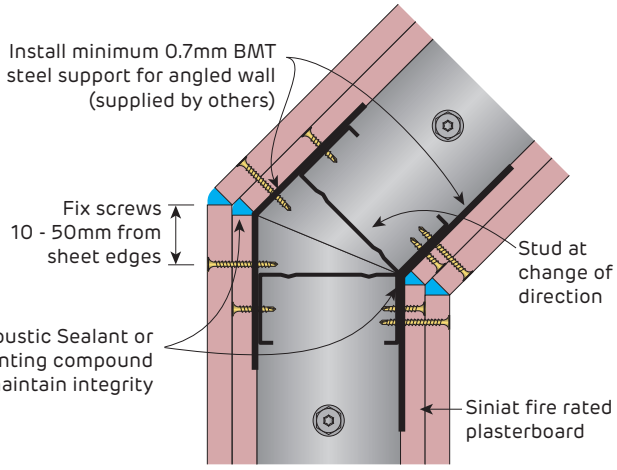

FIGURE 85 Obtuse Angle Corner
Plan

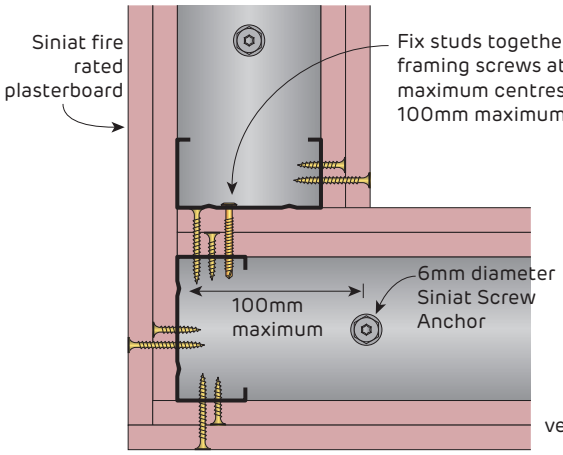

FIGURE 86 90° Corner
Plan

For internal and external corners, fill gaps with either Bindex Fire and Acoustic Sealant or Mastabase jointing compound. Fill any other gaps with Bindex Sealant to maintain integrity. All details apply from 1 to 4 layers.

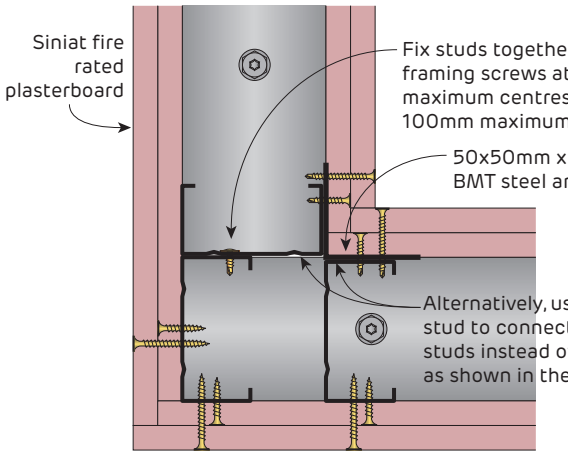

FIGURE 87 90° Corner
Plan

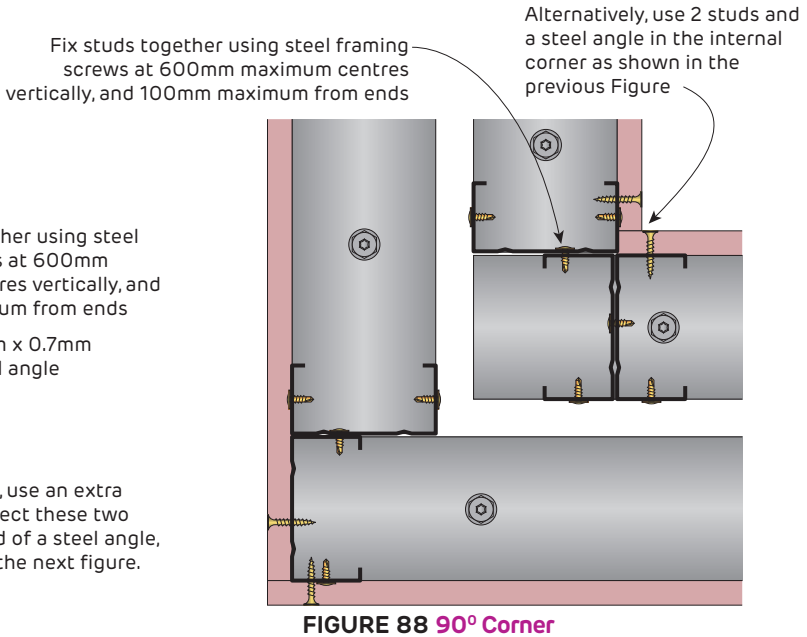

FIGURE 88 90° Corner
Double stud wall
Plan

Fire Rated
Internal Stud Walls

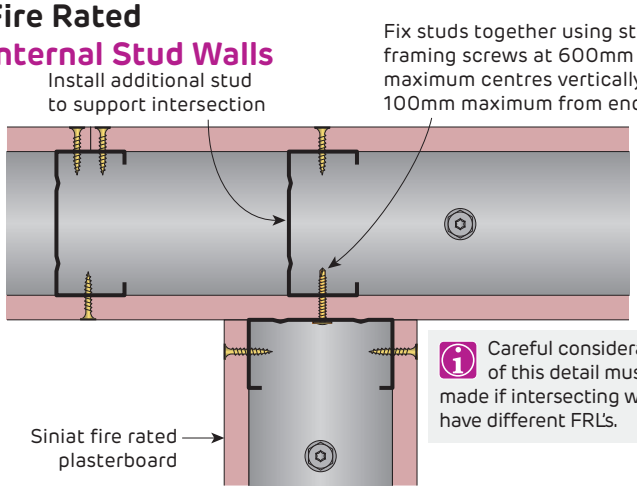

FIGURE 89 Intersecting Wall
Plan

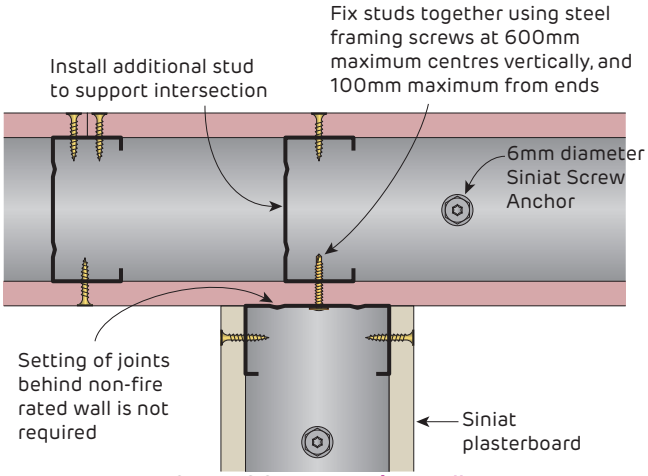

FIGURE 90 Intersecting Wall
Plan

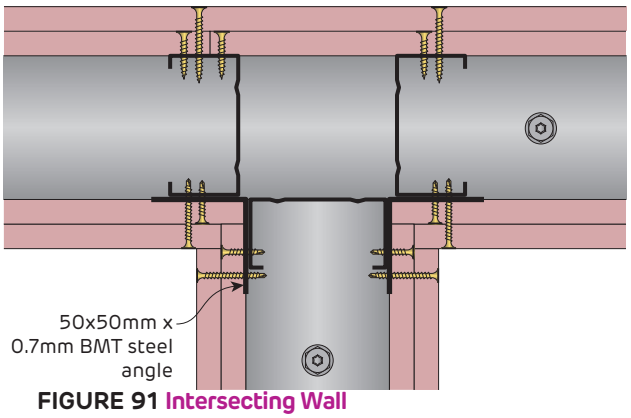

FIGURE 91 Intersecting Wall
Lining and FRL of both intersecting walls must be the same
Plan

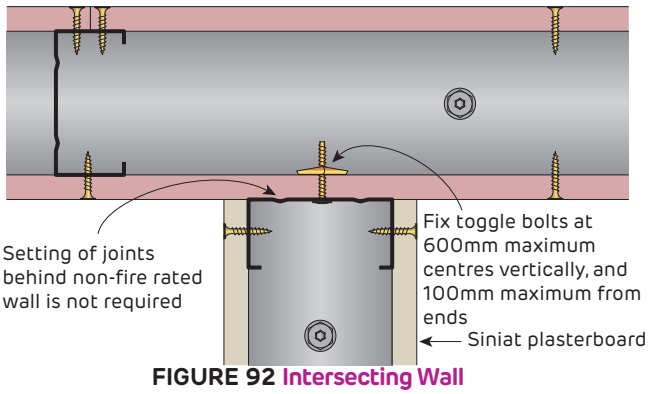

FIGURE 92 Intersecting Wall
Plan

For internal and external corners, fill gaps with either Bindex Fire and Acoustic Sealant or Mastabase jointing compound. Fill any other gaps with Bindex Sealant to maintain integrity. All details apply from 1 to 4 layers.

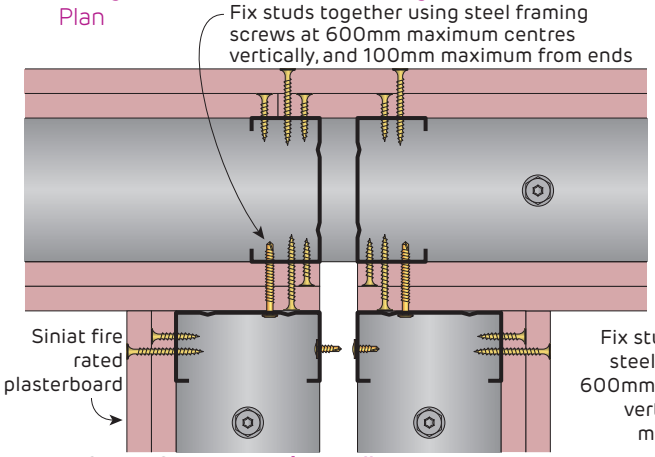

FIGURE 93 Intersecting Wall
Lining and FRL of both intersecting walls must be the same
Plan

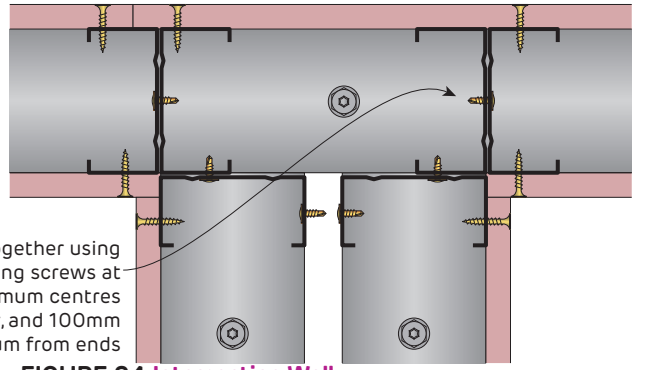

FIGURE 94 Intersecting Wall
Lining and FRL of both intersecting walls must be the same
Plan

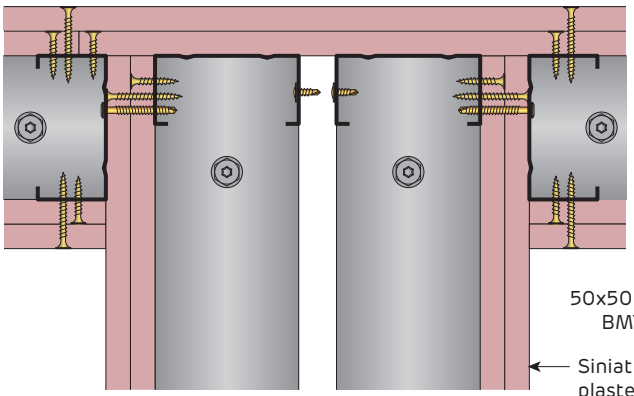

FIGURE 95 Intersecting Wall
Plan

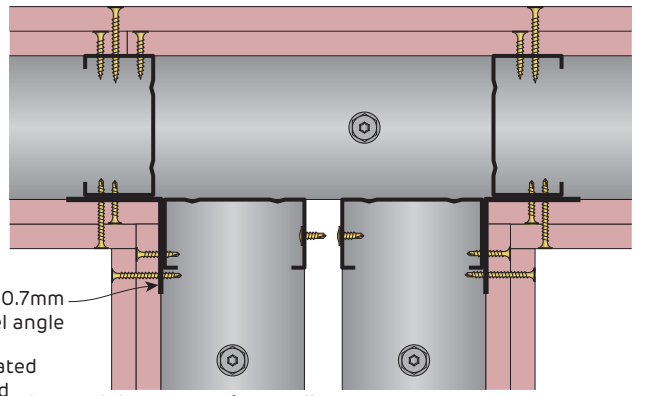

FIGURE 96 Intersecting Wall
Lining and FRL of both intersecting walls must be the same - Plan

Fire Rated
Internal Stud Walls

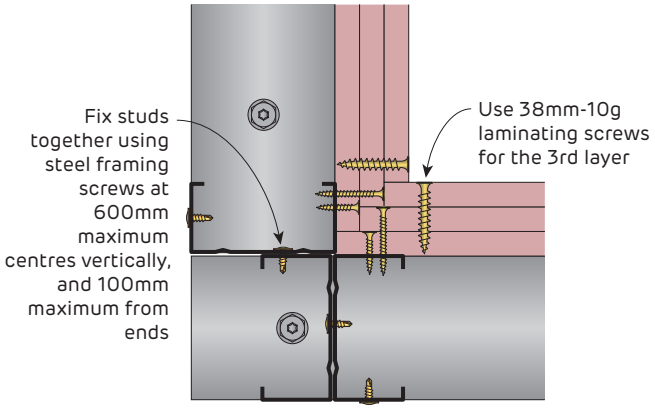

FIGURE 97 90° Internal Corner
Plan

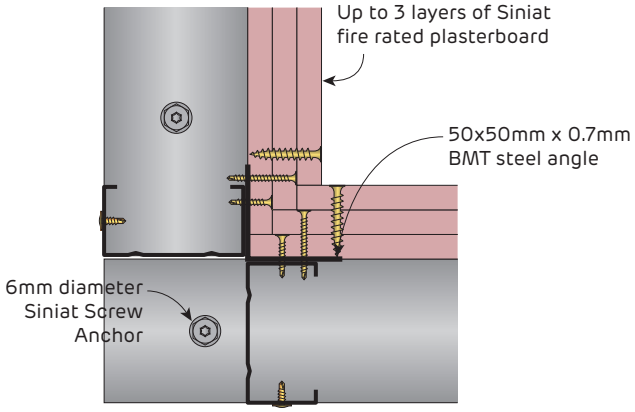

FIGURE 98 90° Internal Corner
Plan

For internal and external corners, fill gaps with either Bindex Fire and Acoustic Sealant or Mastabase jointing compound. Fill any other gaps with Bindex Sealant to maintain integrity. All details apply from 1 to 4 layers.

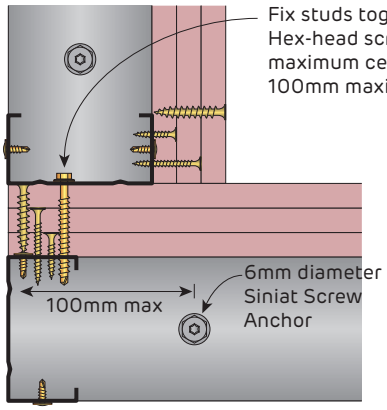

FIGURE 99 90° Internal Corner
Plan

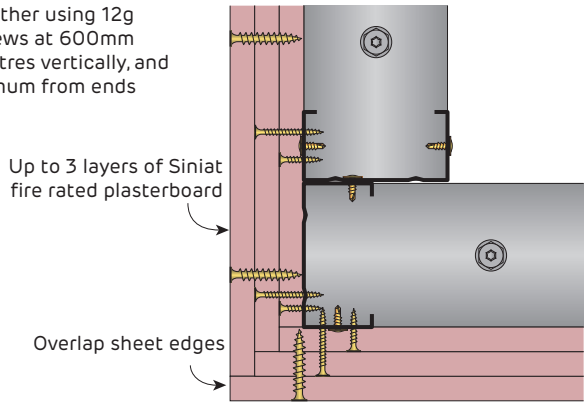

FIGURE 100 90° External Corner
Plan

Fill any gaps with Bindex Fire and Acoustic sealant to maintain integrity

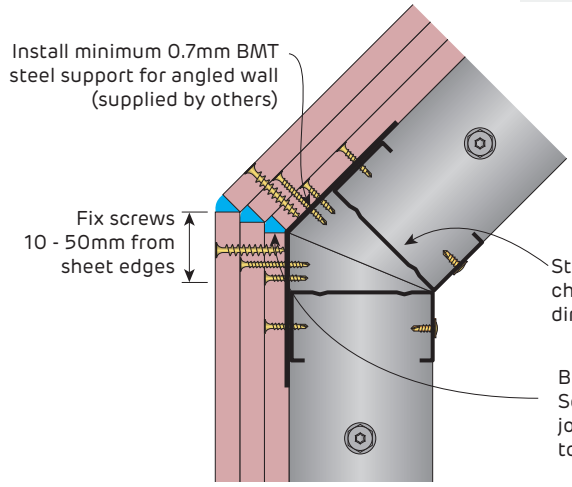

FIGURE 101 Obtuse Angle Corner
Plan

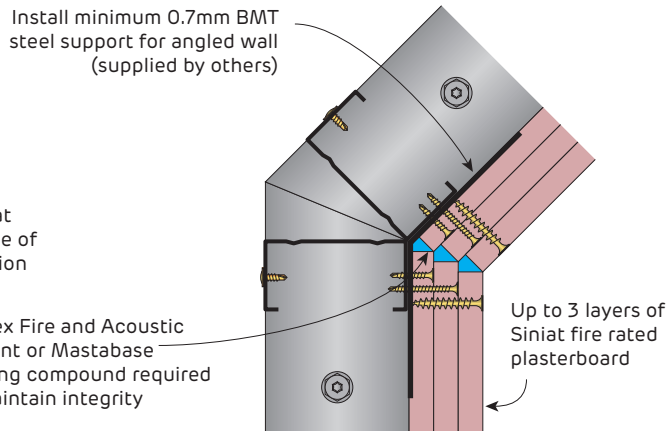

FIGURE 102 Obtuse Angle Corner
Plan

Fire Rated
Internal Stud Walls to Curtain Walls

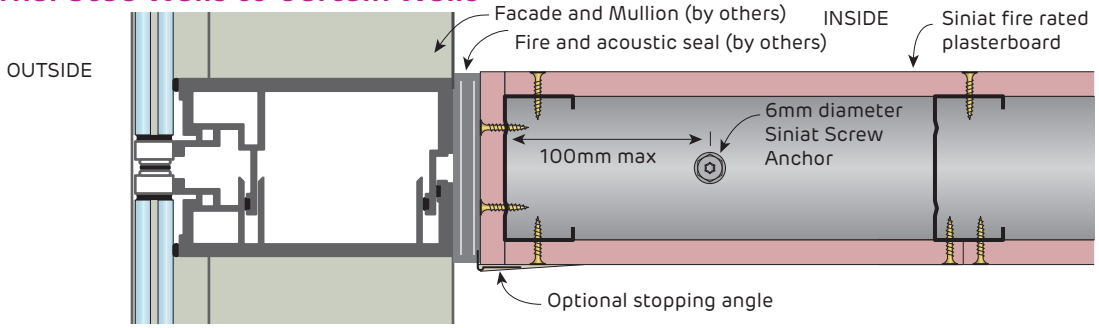

FIGURE 103 Internal Wall to Curtain Wall Mullion
Plan

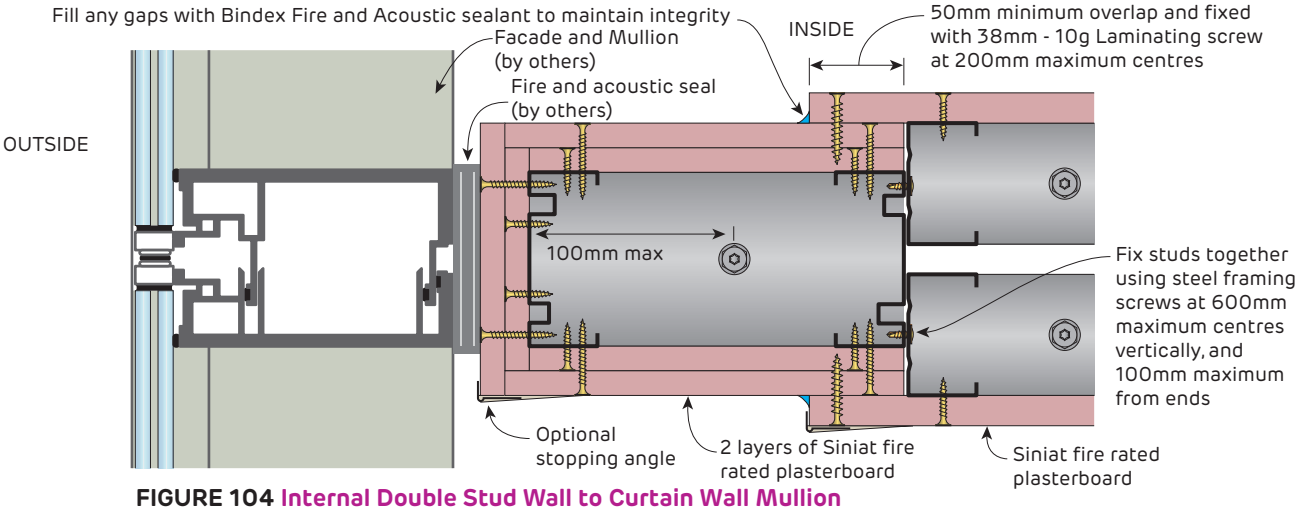

FIGURE 104 Internal Double Stud Wall to Curtain Wall Mullion
Plan

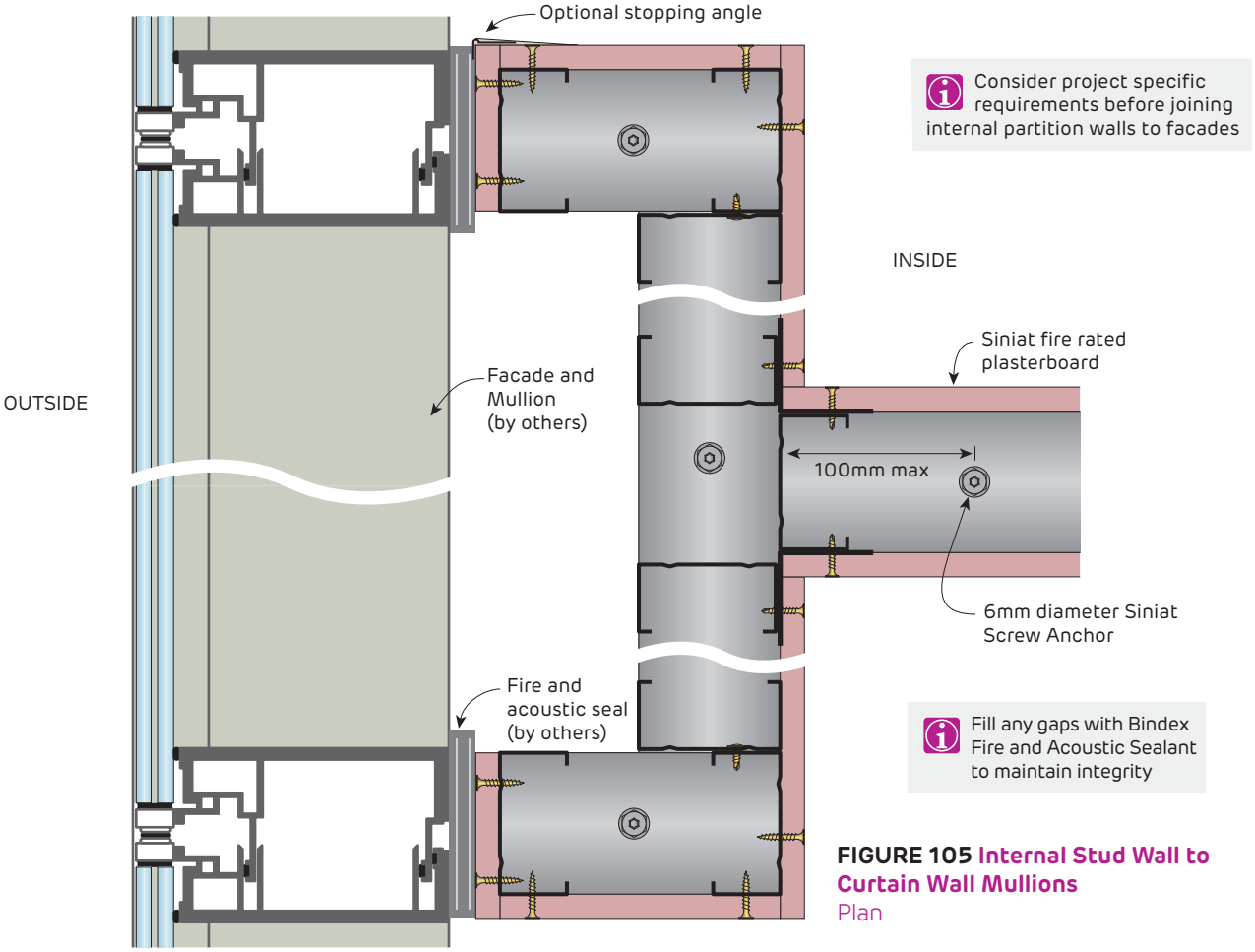

FIGURE 105 Internal Stud Wall to Curtain Wall Mullions
Plan

Fire Rated
Internal Stud Wall Built From One Side Only

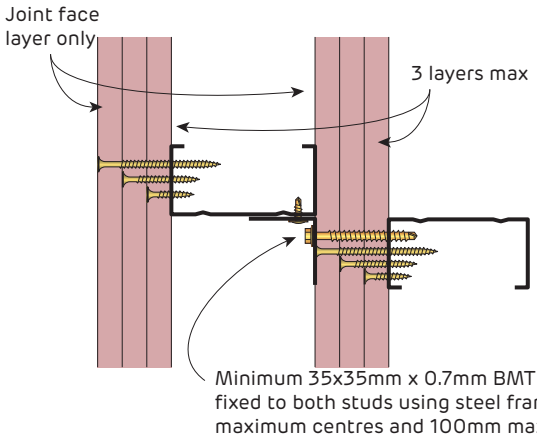

Joint face layer only

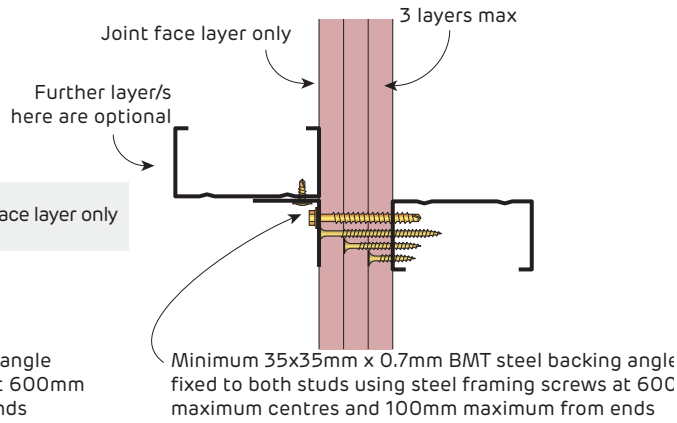

FIGURE 106 Fire Rated Wall Configuration
Fire rated from both directions
Built from one side only - Plan

FIGURE 107 Fire Rated Wall Configuration
Fire rated from both directions
Built from one side only - Plan

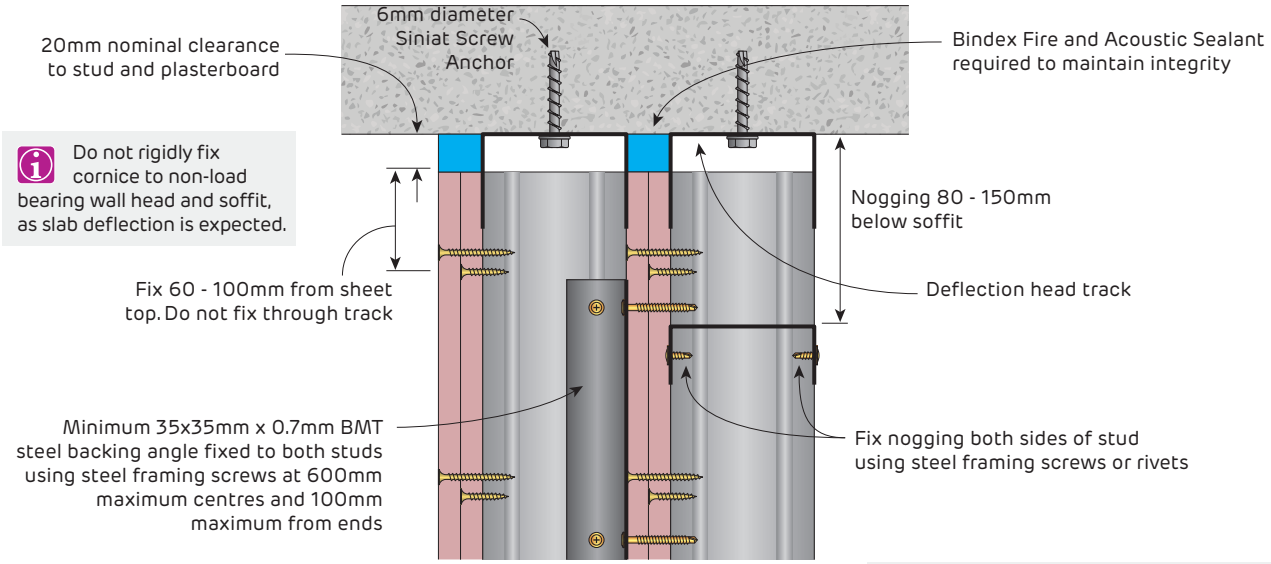

Set the face layer of both sets of fire rated plasterboard layers

FIGURE 108 Wall Head
Fire rated from both directions
Built from one side only - Section

For internal and external corners, fill gaps with either Bindex Fire and Acoustic Sealant or Mastabase jointing compound. Fill any other gaps with Bindex Sealant to maintain integrity. All details apply from 1 to 4 layers.

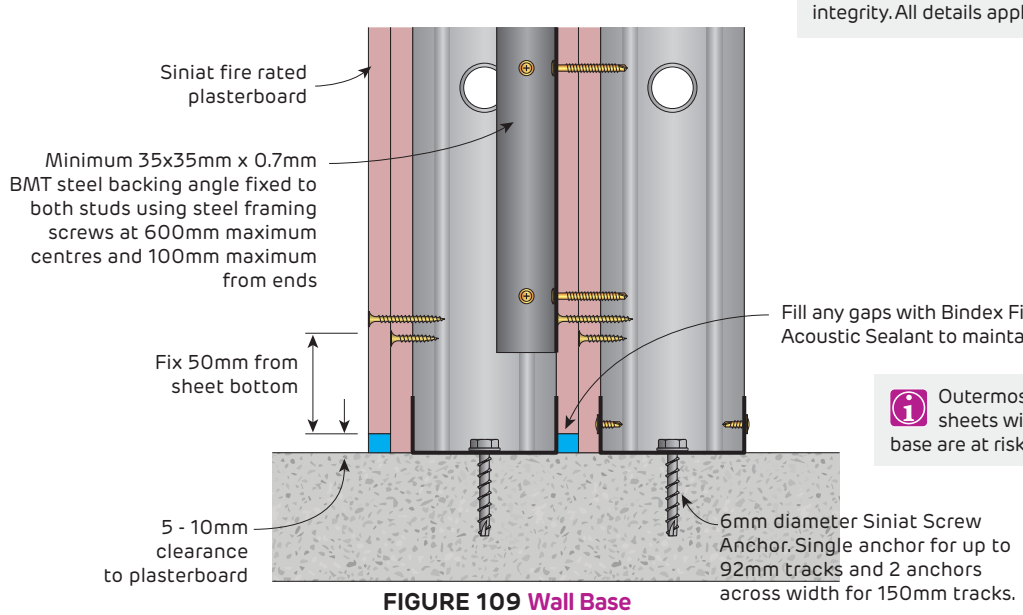

Outermost plasterboard sheets with no gap at the base are at risk of moisture wicking

FIGURE 109 Wall Base
Fire rated from both directions
Built from one side only - Section

Fire Rated
Internal Stud Wall Built From One Side Only

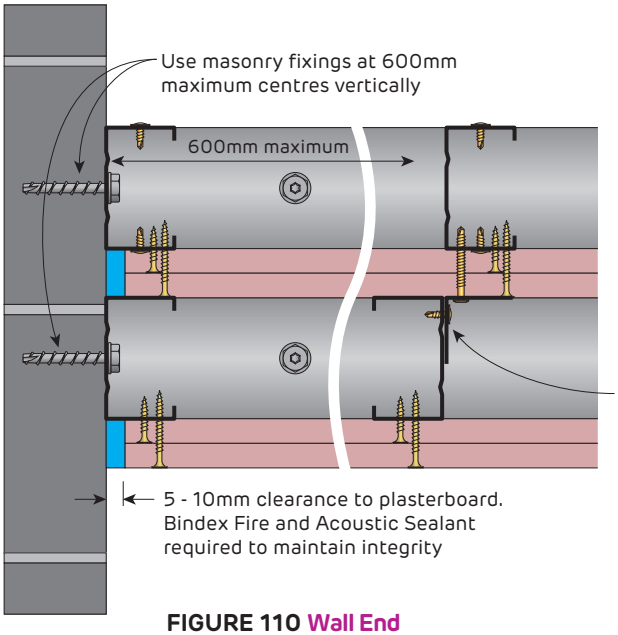

Set the face layer of both sets of fire rated plasterboard layers

FIGURE 110 Wall End
Fire rated from both directions
Built from one side only - Plan

For internal and external corners, fill gaps with either Bindex Fire and Acoustic Sealant or Mastabase jointing compound. Fill any other gaps with Bindex Sealant to maintain integrity. All details apply from 1 to 4 layers.

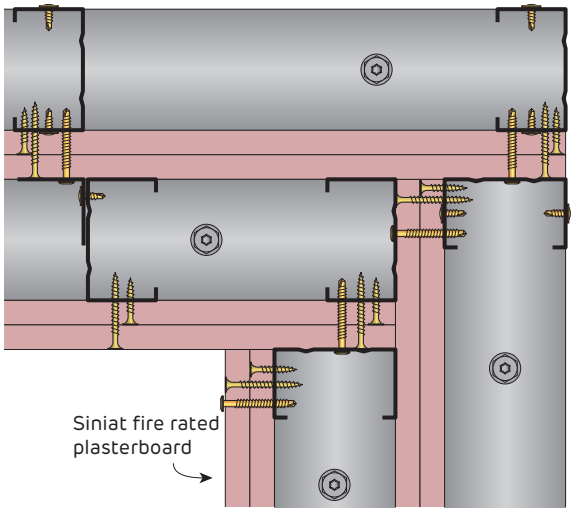

FIGURE 111 Wall Internal Corner
Fire rated from both directions
Built from one side only - Plan

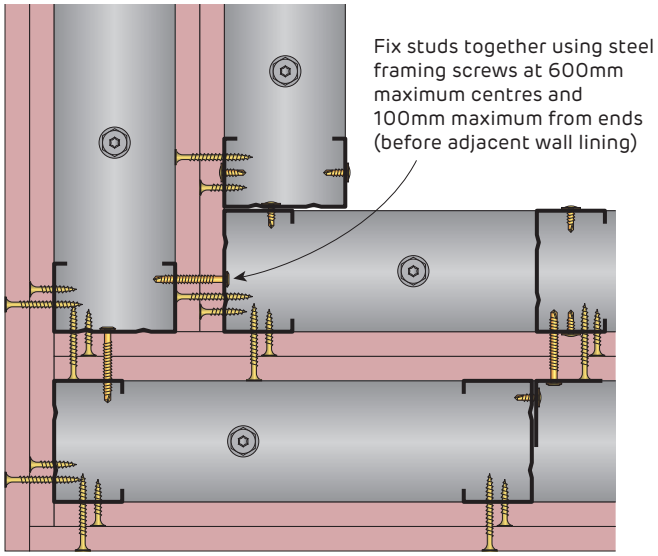

FIGURE 112 Wall External Corner
Fire rated from both directions
Built from one side only - Plan

Fire Rated and Non-Fire Rated
Head and Base Details for Internal Staggered Stud Walls - Lined Full Height

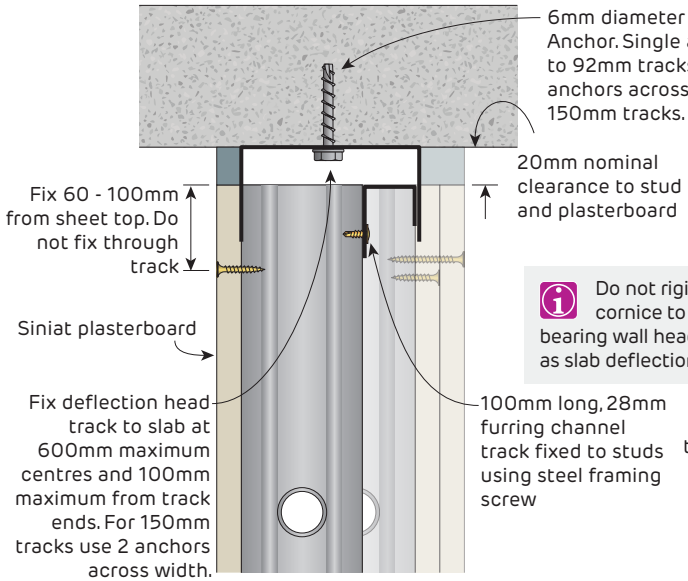

FIGURE 113 Wall Head - Staggered Stud Deflection Head Track Section

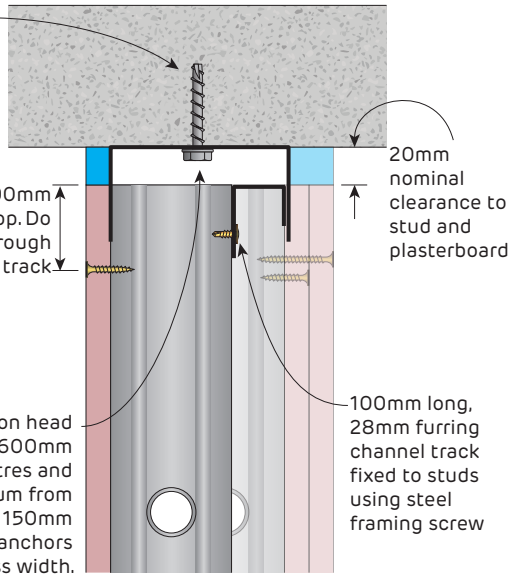

FIGURE 114 Wall Head - Staggered Stud Deflection Head Track Section

Do not rigidly fix cornice to non-load bearing wall head and soffit, as slab deflection is expected.

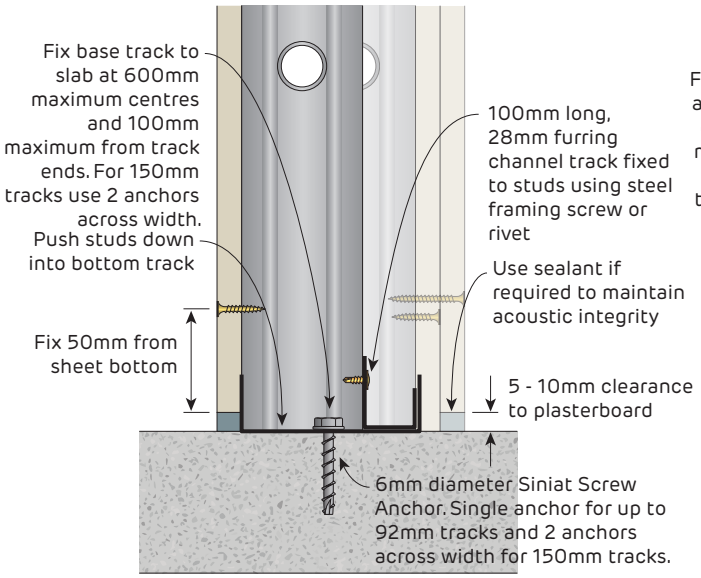

FIGURE 115 Wall Base - Staggered Stud Section

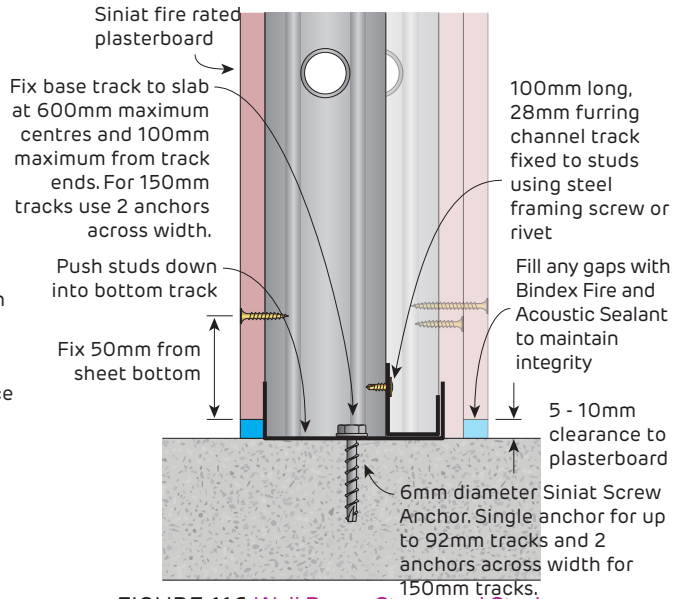

FIGURE 116 Wall Base - Staggered Stud Section

Fill any gaps with Bindex Fire and Acoustic Sealant to maintain integrity

Outermost plasterboard sheets with no gap at the base are at risk of moisture wicking

Fire Rated
Internal Staggered Stud Walls

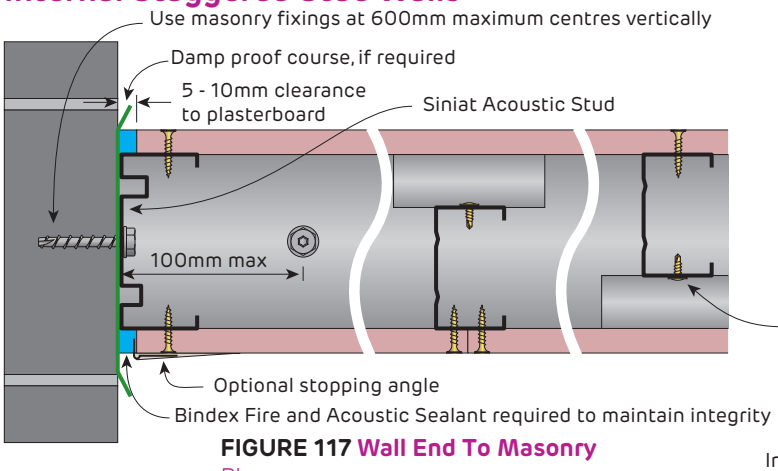

FIGURE 117 Wall End To Masonry
Plan

For internal and external corners, fill gaps with either Bindex Fire and Acoustic Sealant or Mastabase jointing compound. Fill any other gaps with Bindex Sealant to maintain integrity. All details apply from 1 to 4 layers.

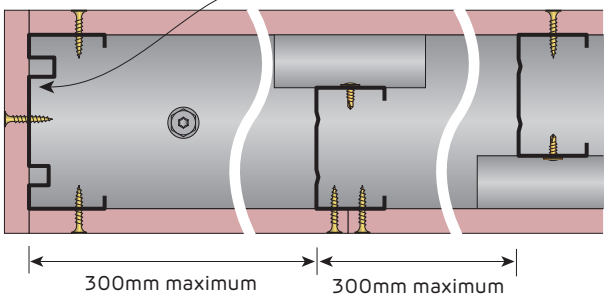

FIGURE 118 Wall End
Plan

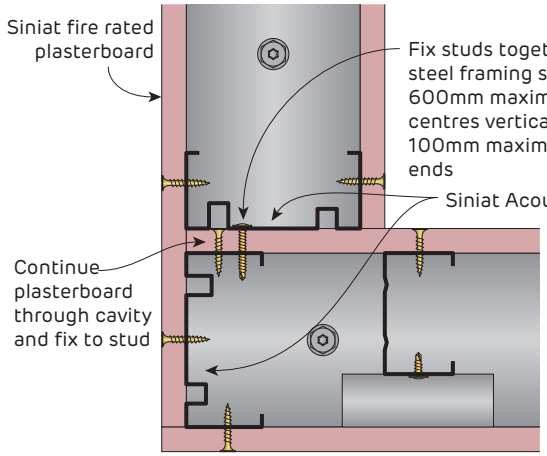

FIGURE 119 90° Corner
Plan

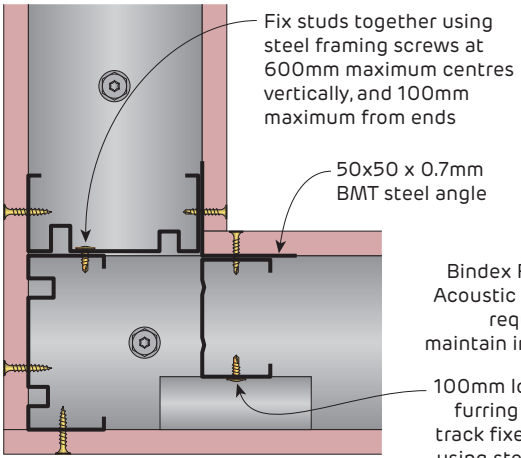

FIGURE 120 90° Corner
Plan

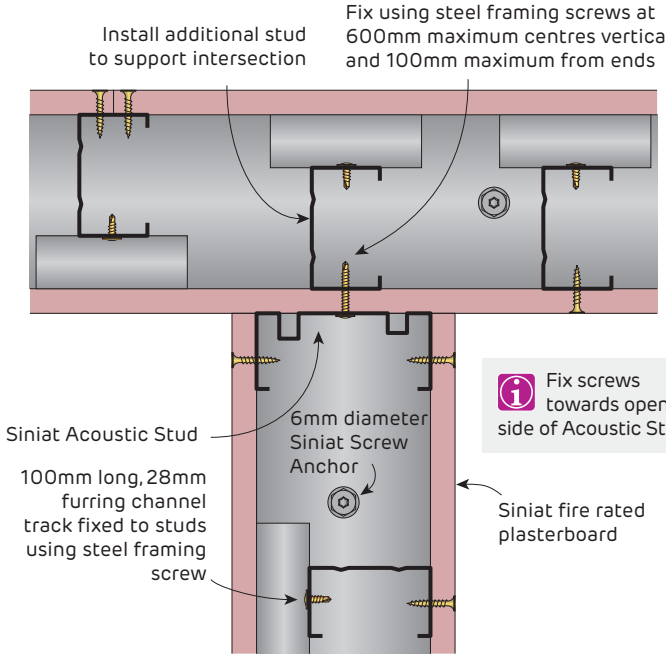

Fix screws towards open side of Acoustic Stud

FIGURE 118 Intersecting Wall
Plan

Details on this page refer to 64mm studs in a 92mm track only

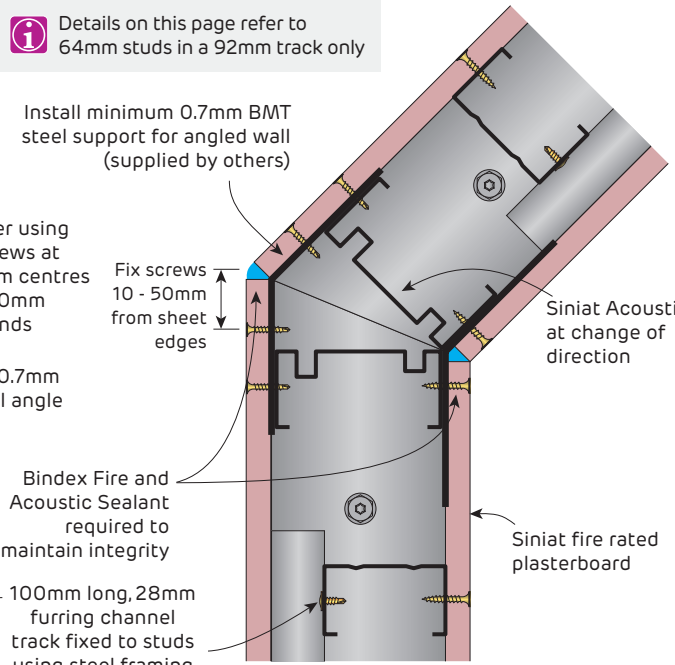

FIGURE 121 Obtuse Angle Corner
Plan

Fire Rated and Non-Fire Rated
Head and Base Details for Internal Acoustic Stud Walls - Lined Full Height

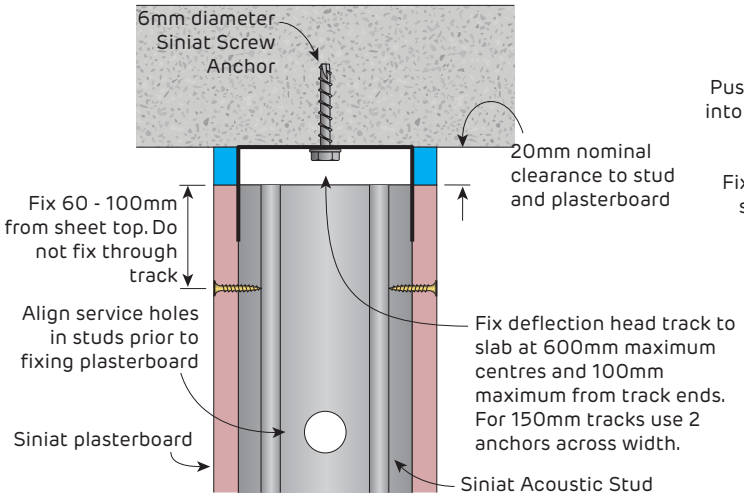

FIGURE 122 Wall Head
Acoustic Stud with Deflection Head Track
Section

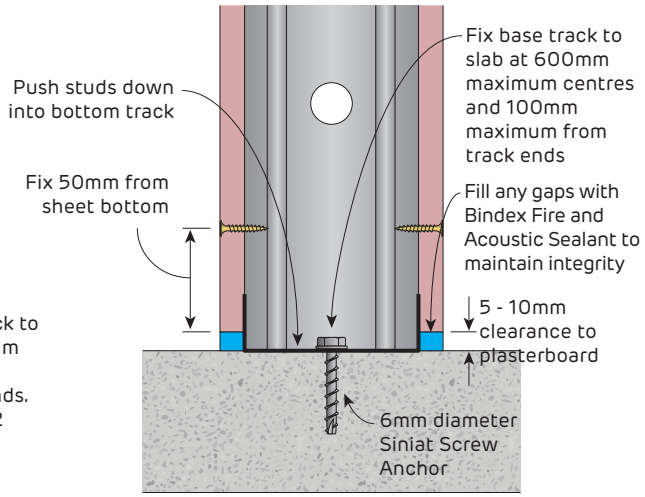

FIGURE 123 Wall Base
Acoustic Stud
Section

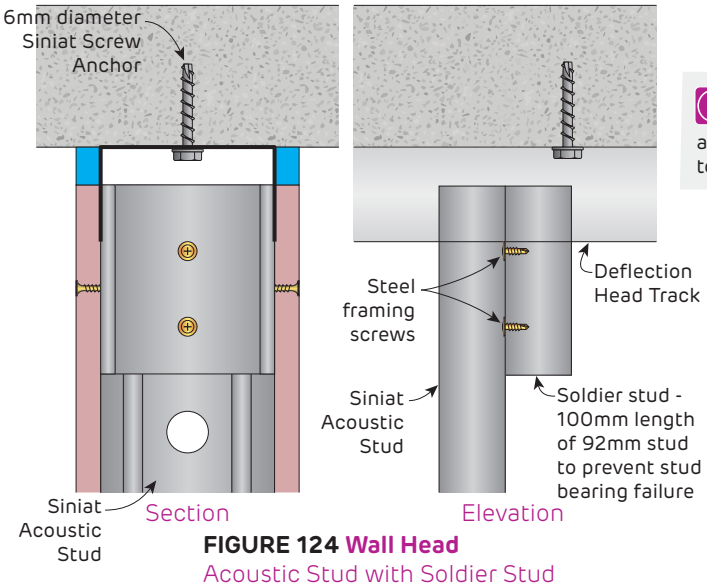

FIGURE 124 Wall Head
Acoustic Stud with Soldier Stud

Fill any gaps with Bindex Fire and Acoustic Sealant to maintain integrity

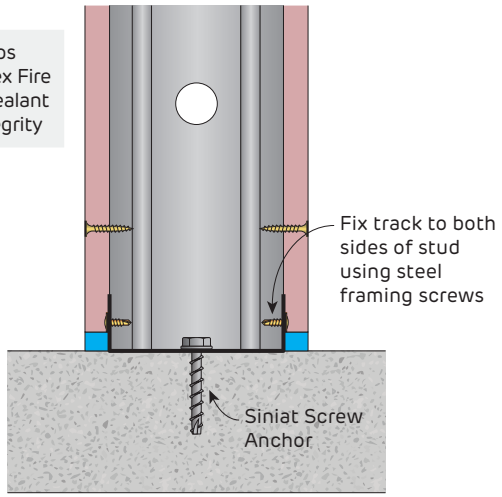

FIGURE 125 Wall Base
Acoustic Stud fixed to Base Track
Section

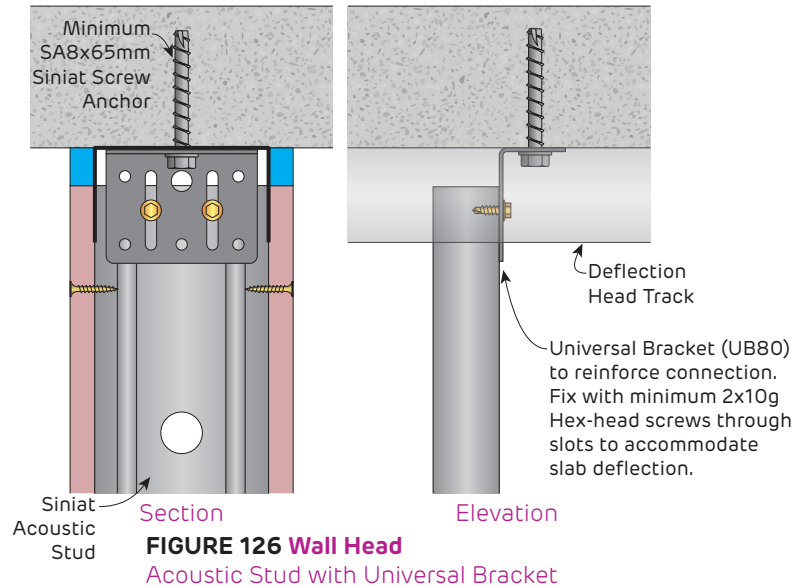

FIGURE 126 Wall Head
Acoustic Stud with Universal Bracket

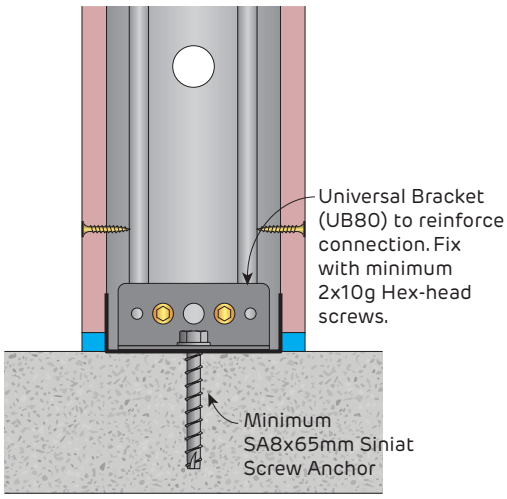

FIGURE 127 Wall Base
Acoustic Stud with Universal Bracket
Section

Fire Rated

Internal Acoustic Stud Walls - Lined Full Height

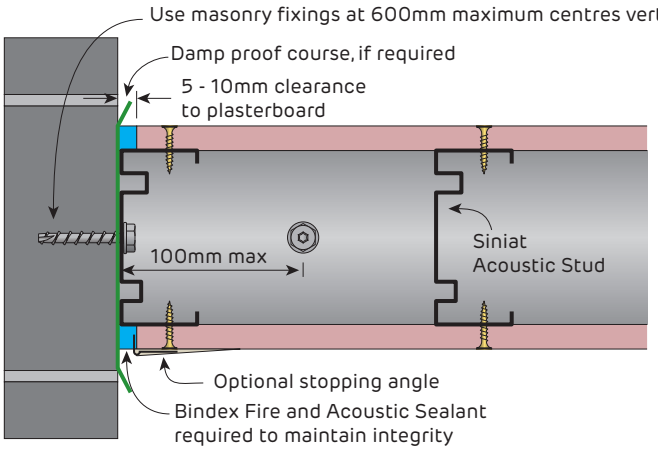

FIGURE 128 Wall End To Masonry
Plan

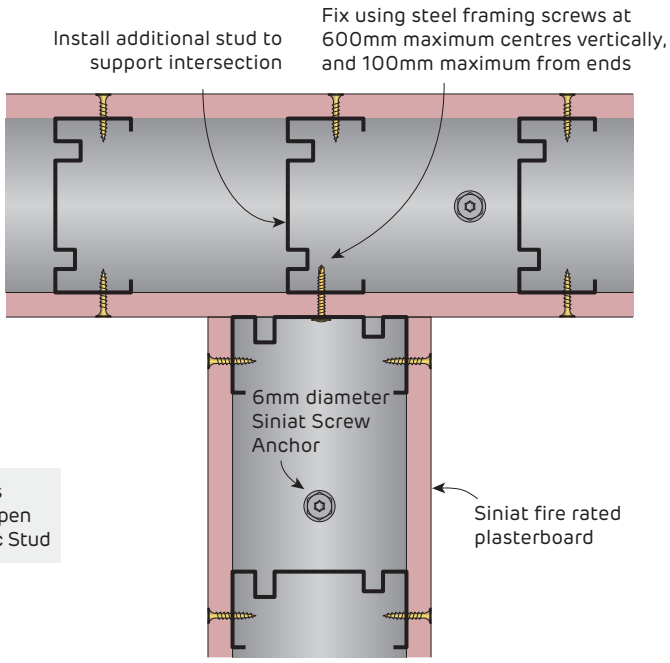

FIGURE 129 Intersecting Wall
Plan

Fix screws towards open side of Acoustic Stud

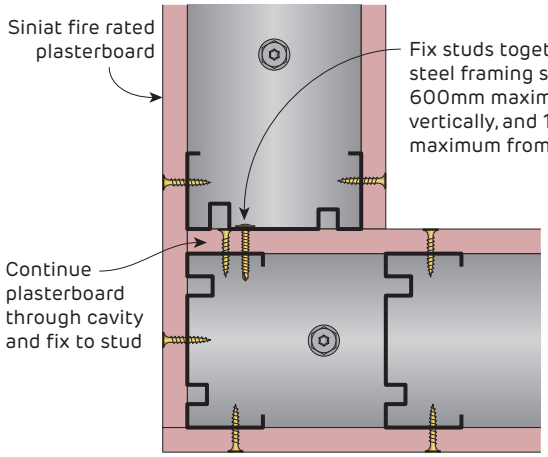

FIGURE 130 90° Corner
Plan

For internal and external corners, fill gaps with either Bindex Fire and Acoustic Sealant or Mastabase jointing compound. Fill any other gaps with Bindex Sealant to maintain integrity. All details apply from 1 to 4 layers.

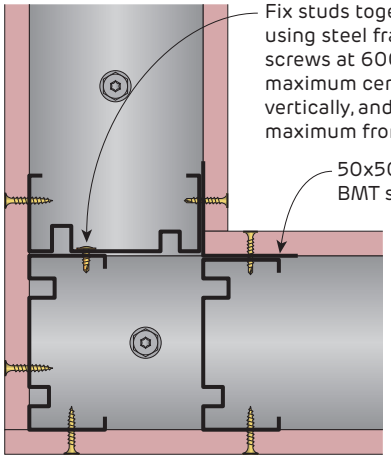

FIGURE 131 90° Corner
Plan

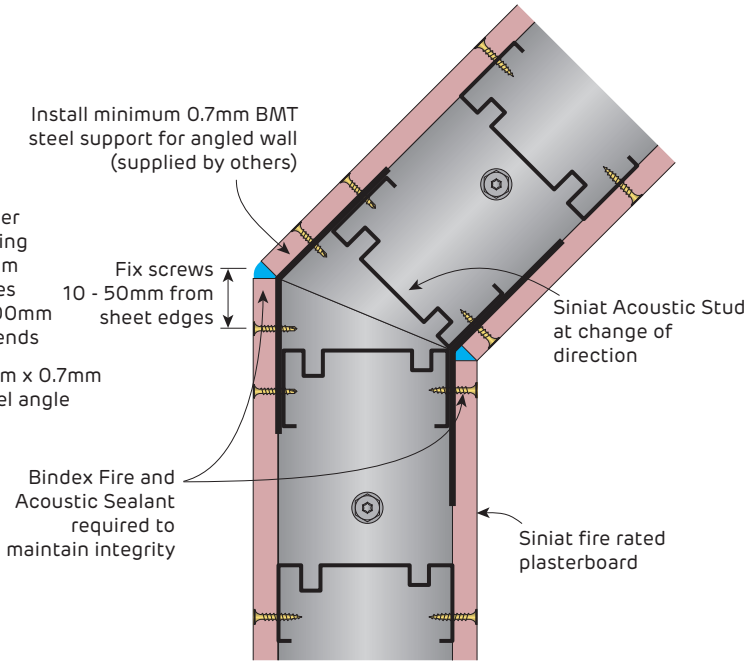

FIGURE 132 Obtuse Angle Corner
Plan

Fire Rated
Step in Concrete Slab Detail for Internal Stud Walls

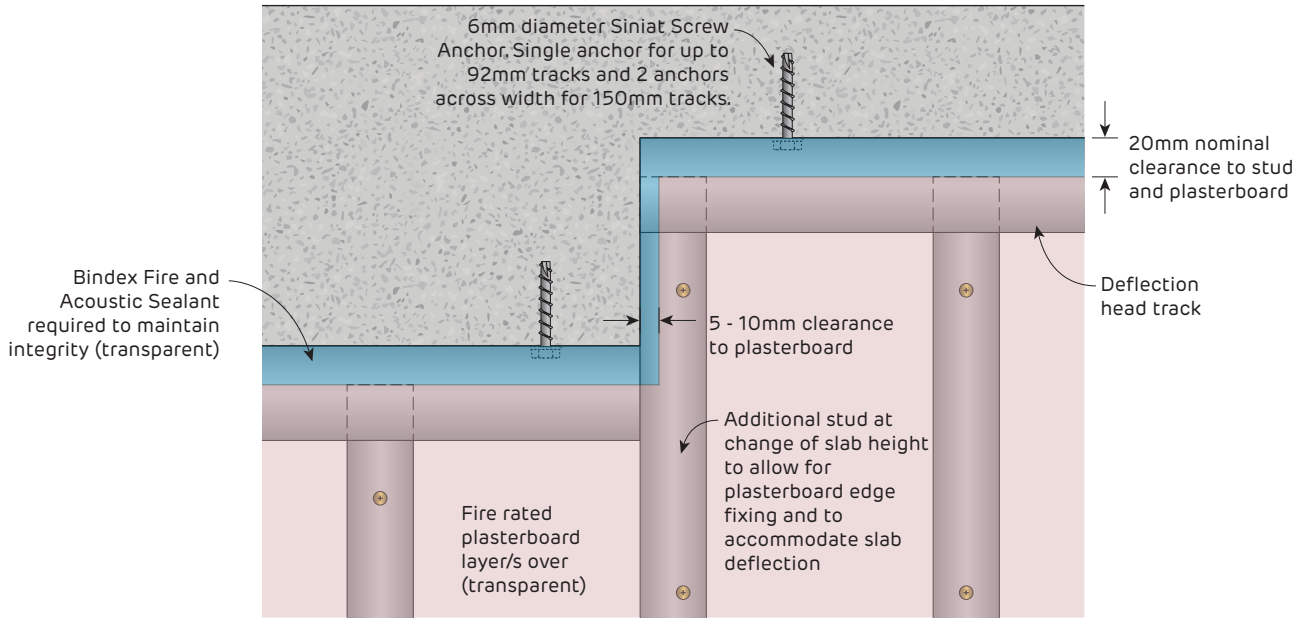

FIGURE 133 Step in Concrete Slab
Elevation

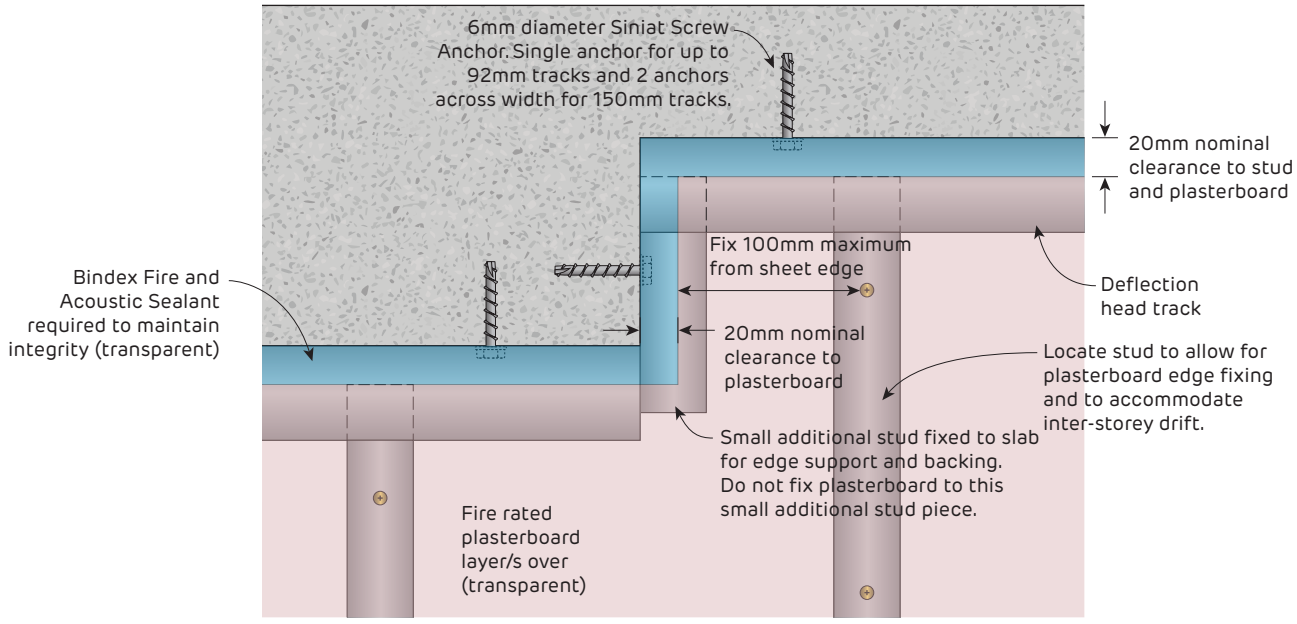

FIGURE 134 Step in Concrete Slab with 20mm allowance for Inter-Storey Drift
Elevation

Fire Rated
Sliding Connection Details for Internal Stud Walls

Do not rigidly fix cornice to non-load bearing wall head and soffit, as slab deflection is expected.

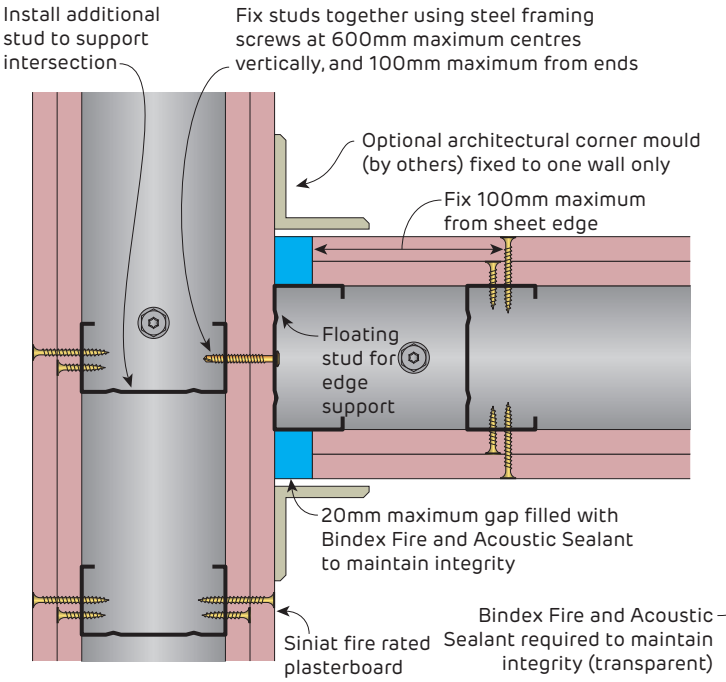

FIGURE 135 Sliding Wall End To Plasterboard
Plan

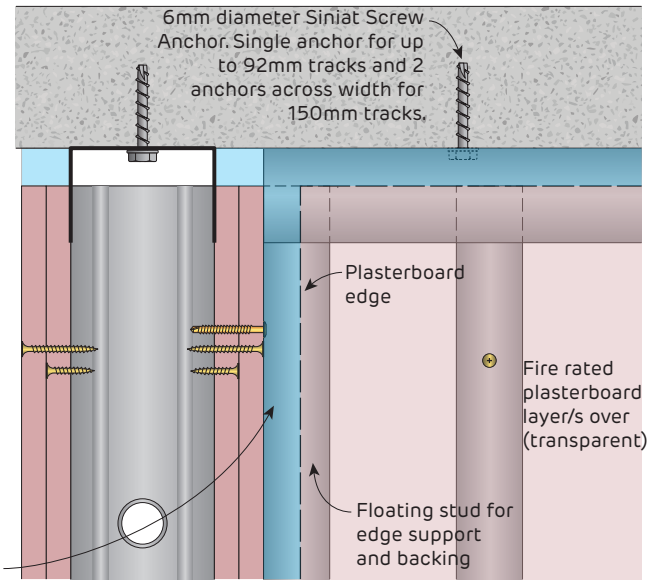

Note: Optional architectural corner mould not shown for clarity

FIGURE 136 Sliding Wall End To Plasterboard
Elevation to Figure 135

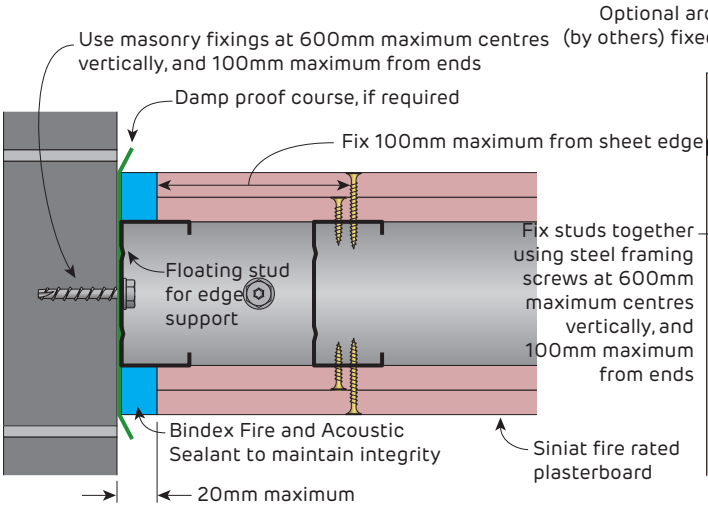

FIGURE 137 Sliding Wall End To Masonry
Plan

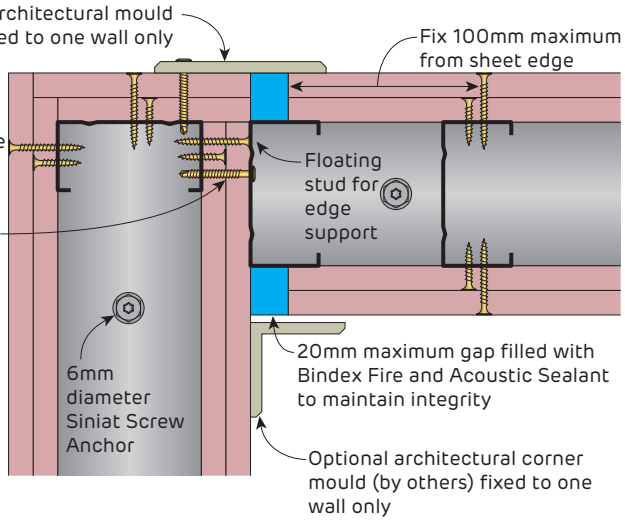

FIGURE 138 90° Sliding Corner
Plan

Fill any gaps with Bindex Fire and Acoustic Sealant to maintain integrity

Fire Rated
Sliding Connection Details for Internal Stud Walls

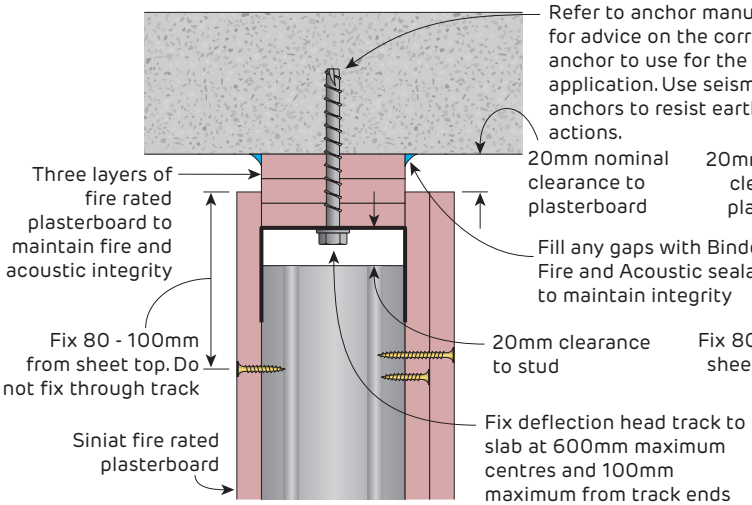

FIGURE 139 Sliding Head
Deflection Head Track
Section

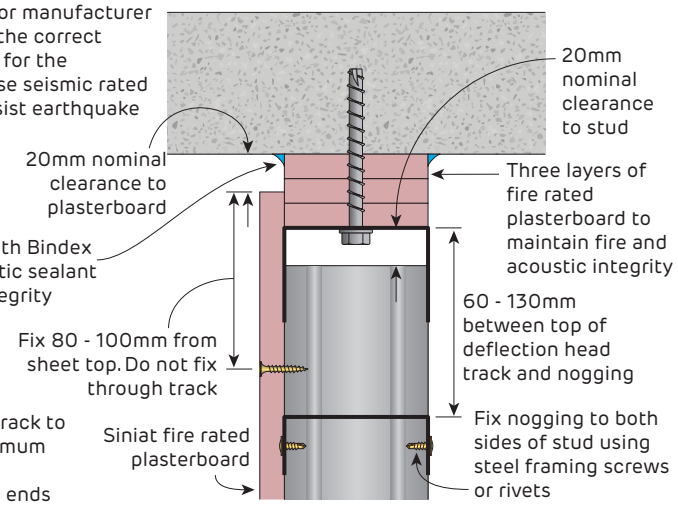

FIGURE 140 Sliding Head - Lined One Side Only
Deflection Head Track
Section

Do not rigidly fix cornice to non-load bearing wall head and soffit, as slab deflection is expected.

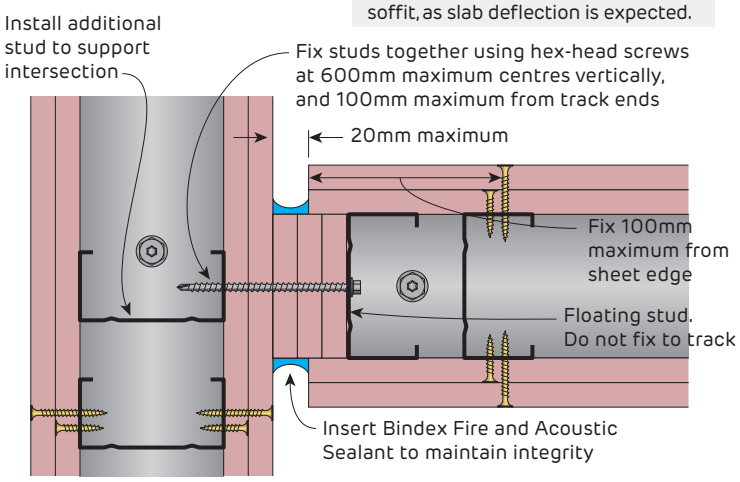

FIGURE 141 Sliding Wall End To Plasterboard
Plan

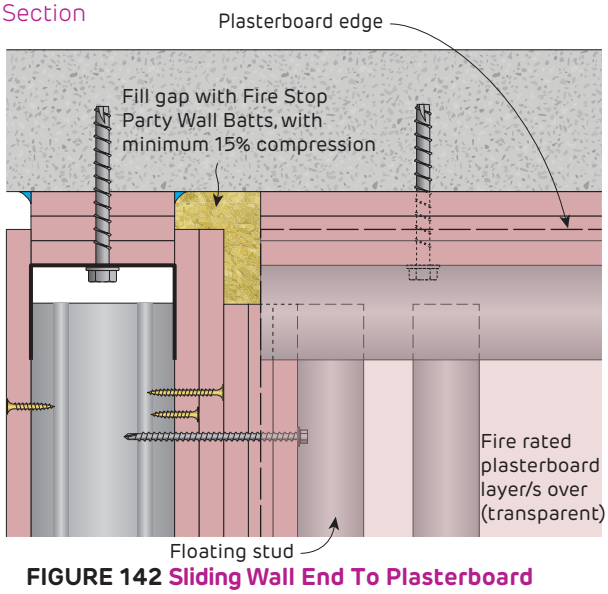

FIGURE 142 Sliding Wall End To Plasterboard
Elevation to Figure 141

Fill any gaps with Bindex Fire and Acoustic Sealant to maintain integrity

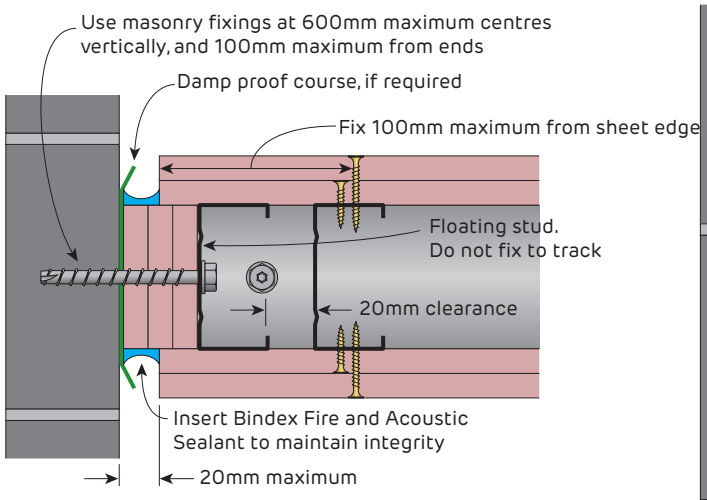

FIGURE 143 Sliding Wall End To Masonry
Plan

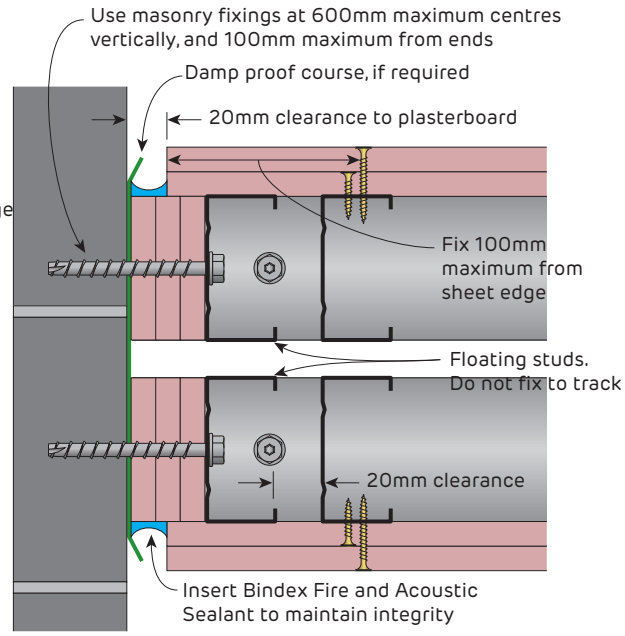

FIGURE 144 Sliding Wall End To Masonry
Plan

Fire Rated
Internal Stud Walls with Integrated Structural Beams to Extend Wall Heights

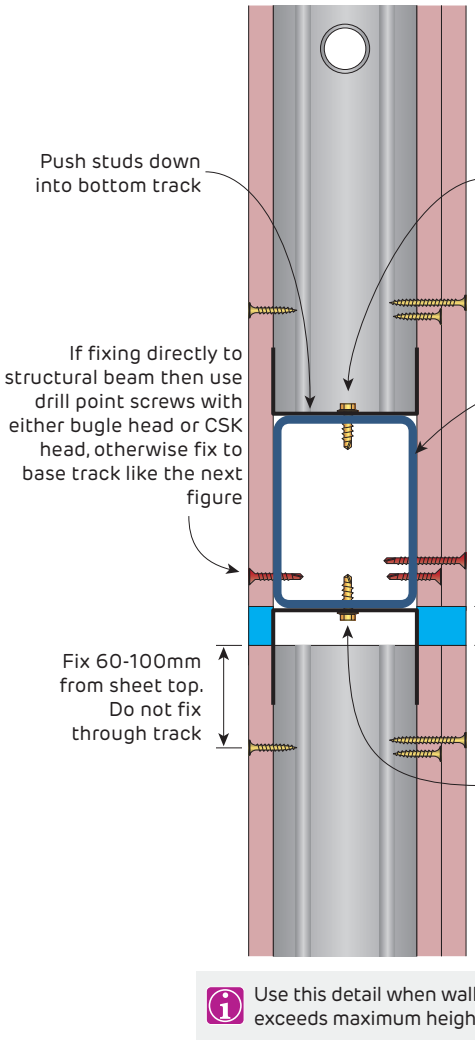

FIGURE 145 Wall Head to Supporting Beam
With load bearing structural members
Section

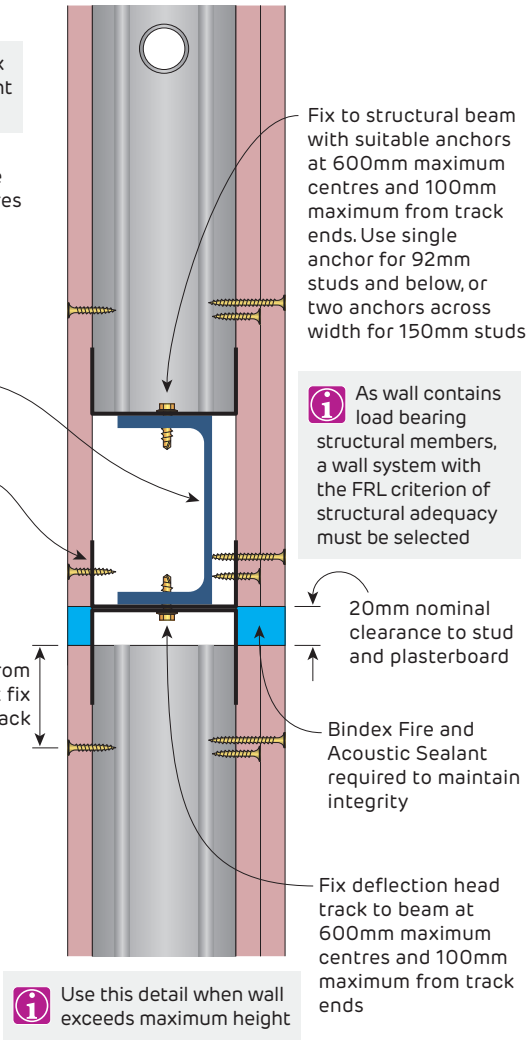

FIGURE 146 Wall Head to Supporting Beam
With load bearing structural members
Section

Table 16 Suggested Sizing of Structural Members in Steel Stud Plasterboard Walls

Stud Size (mm)	Structural Members		
	RHS	SHS	PFC
51	75x50 RHS 100x50 RHS 127x51 RHS 150x50 RHS	50x50 SHS	75PFC5.92 100PFC8.33
64	75x50 RHS 100x50 RHS 127x51 RHS 150x50 RHS	50x50 SHS	100PFC8.33
76	125x75 RHS 102x76 RHS 152x76 RHS	65x65 SHS 75x75 SHS	150PFC17.7 180PFC20.9 200PFC22.9 230PFC25.1
92	125x75 RHS 102x76 RHS 152x76 RHS	75x75 SHS 89x89 SHS 90x90 SHS	-
150	250x150 RHS	150x150 SHS	-

Fire Rated
Internal Wall Built Around Columns

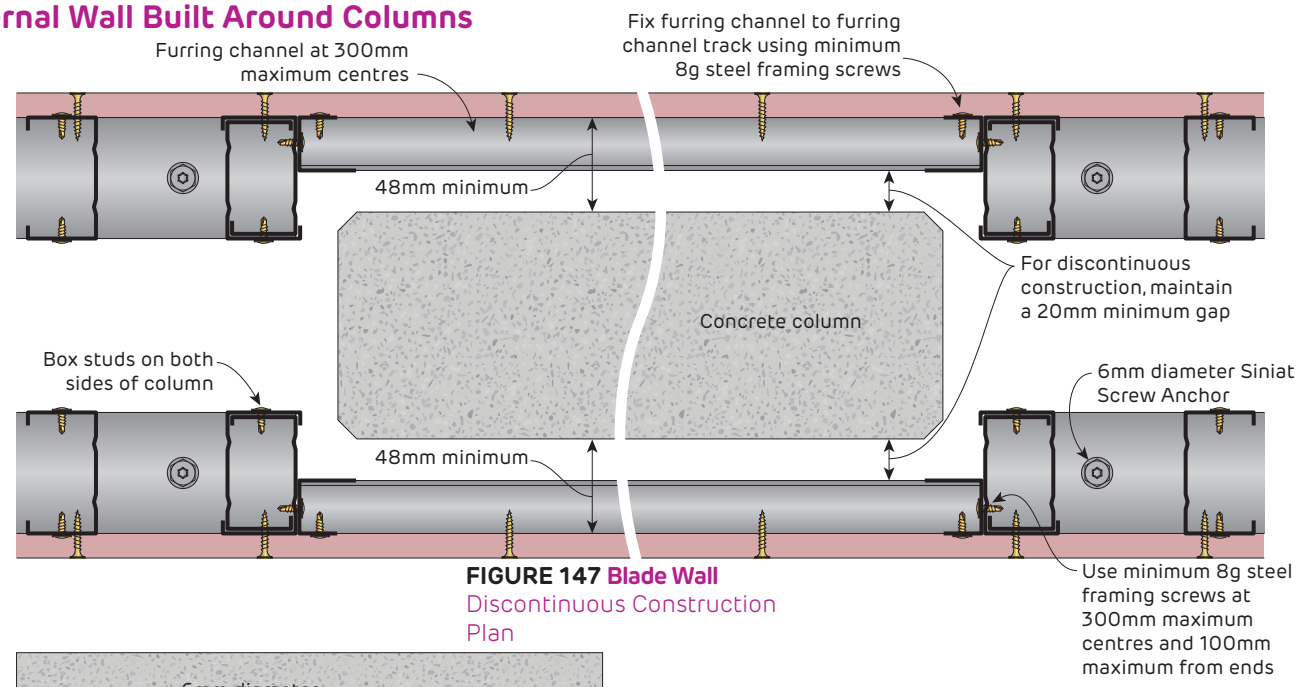

FIGURE 147 Blade Wall
Discontinuous Construction
Plan

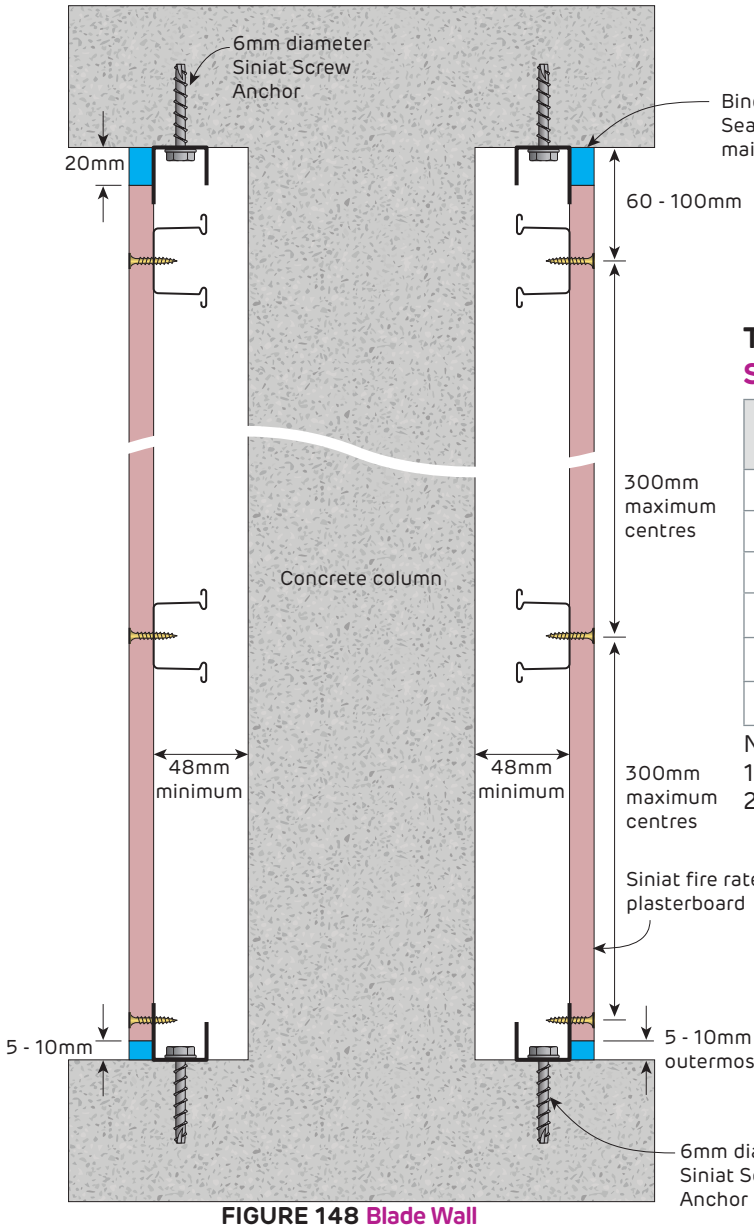

FIGURE 148 Blade Wall
Discontinuous Construction
Section

Insulation not shown for clarity. Refer to System PMW101 in Section 3.5 for lining and insulation required.

Table 17 Horizontal Furring Channel Span Table over Column

W_{ult} (kPa)	W_{ser} (kPa)	28mm Furring Channel (mm)
0.39	0.25	1350
0.47	0.3	1280
0.54	0.35	1240
0.59	0.25	1210
0.71	0.3	1150
0.83	0.35	1100

Notes
1. Furring channels at 300mm maximum centres
2. Lateral deflection limited to span/240

Outermost plasterboard sheets with no gap at the base are at risk of moisture wicking

Fire Rated
Internal Wall Built Around Columns

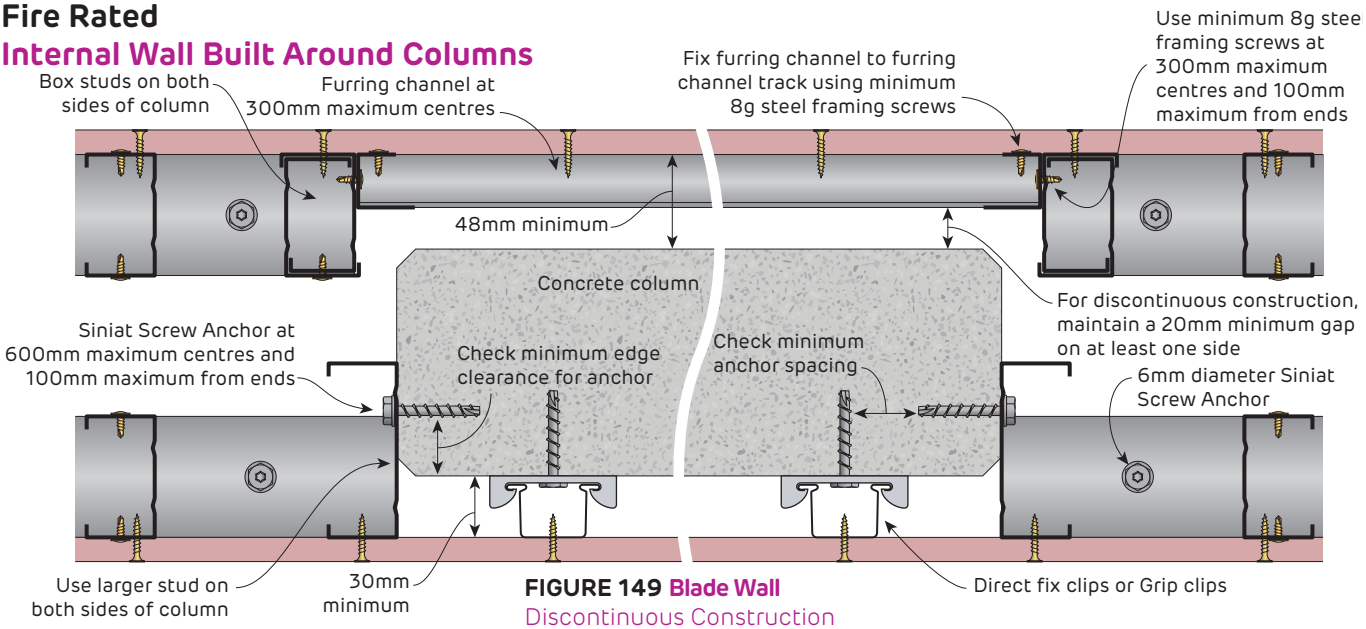

FIGURE 149 Blade Wall
Discontinuous Construction Plan

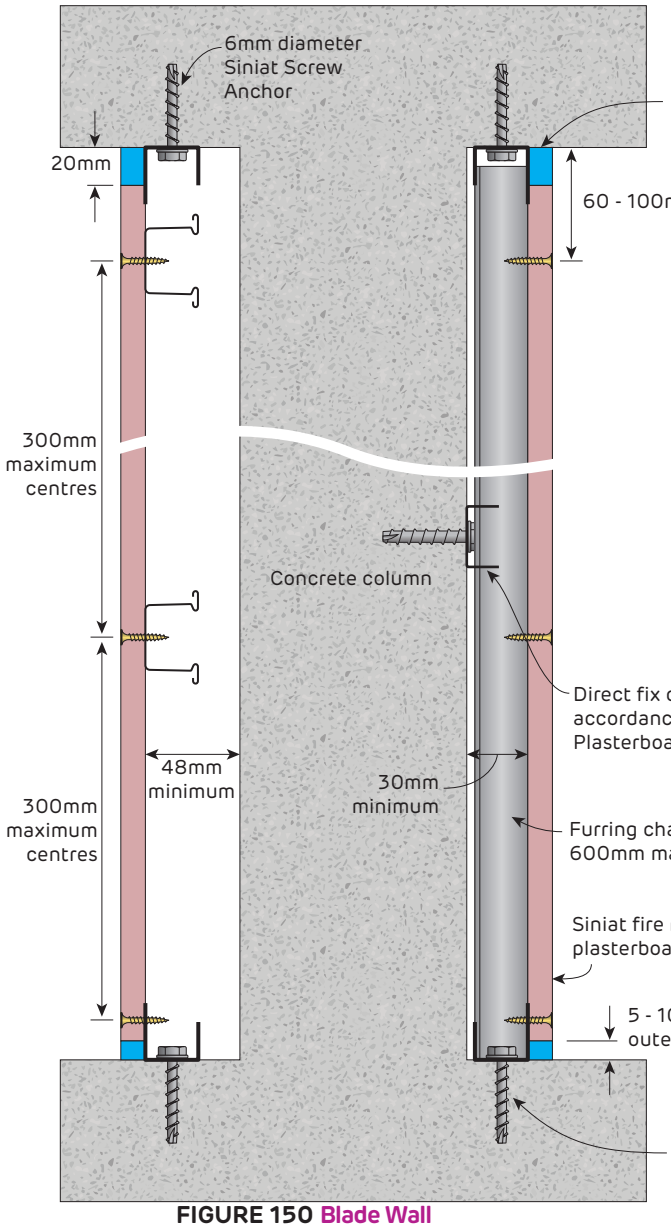

FIGURE 150 Blade Wall
Discontinuous Construction Section

Insulation not shown for clarity. Refer to System PMW102 in Section 3.5 for lining and insulation required.

Table 18 Horizontal Furring Channel Span Table over Column

W_{ult} (kPa)	W_{ser} (kPa)	28mm Furring Channel (mm)
0.39	0.25	1350
0.47	0.3	1280
0.54	0.35	1240
0.59	0.25	1210
0.71	0.3	1150
0.83	0.35	1100

Notes
1. Furring channels at 300mm maximum centres
2. Lateral deflection limited to span/240

If a discontinuous wall (Separating Wall) is required, then Direct fix clips or Grip clips may only be used on one side of the concrete column, and the other side must be separated with a minimum 20mm gap.

Outermost plasterboard sheets with no gap at the base are at risk of moisture wicking

Fire Rated
Internal Wall Built Around Columns

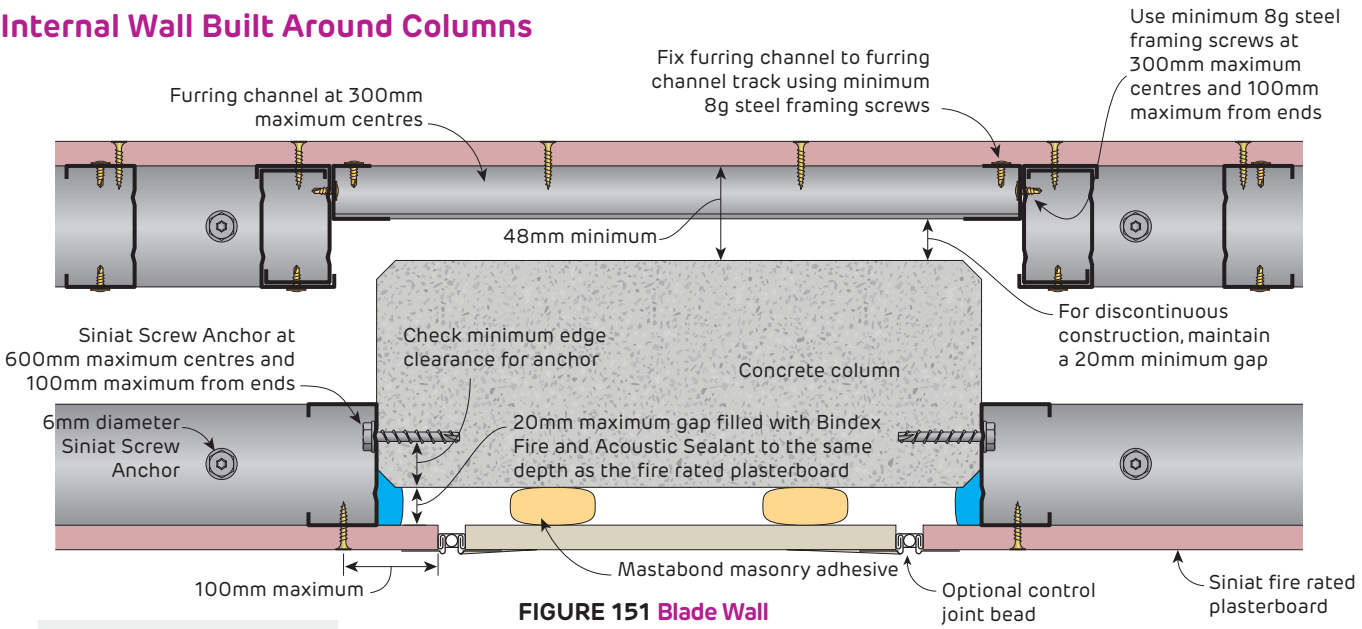

FIGURE 151 Blade Wall Discontinuous Construction Plan

Insulation not shown for clarity. Refer to System PMW103 in Section 3.5 for lining and insulation required.

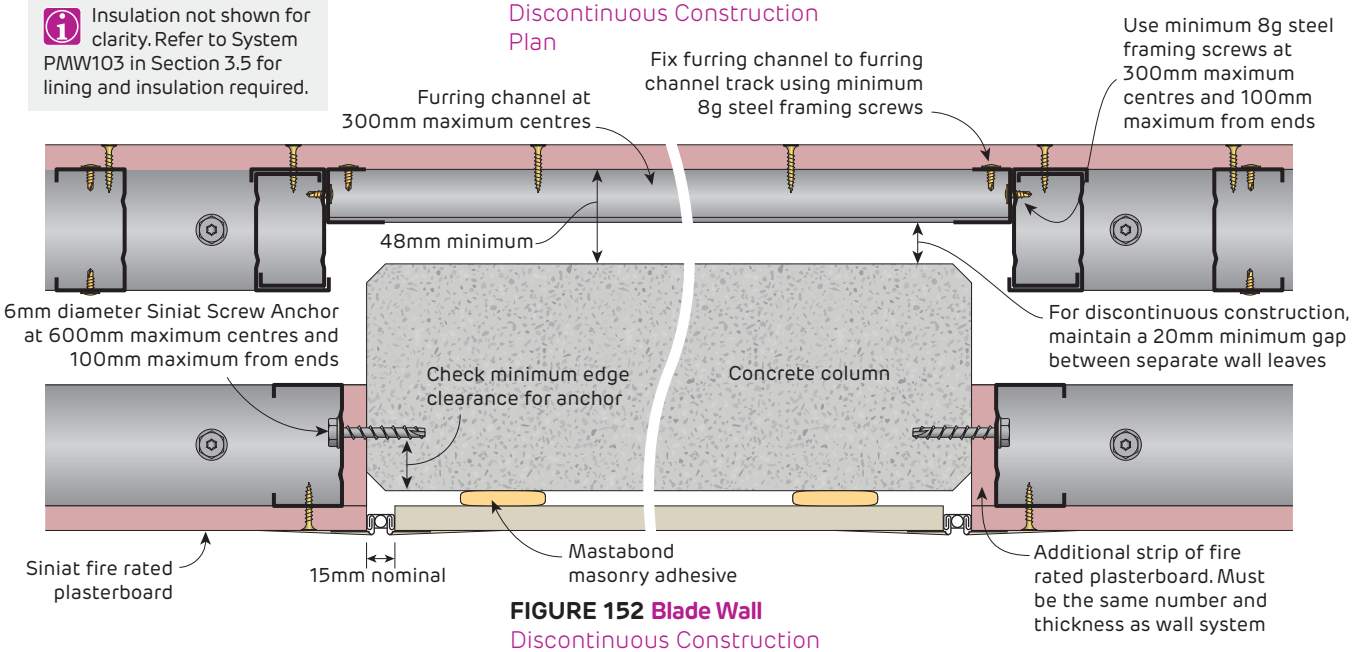

FIGURE 152 Blade Wall Discontinuous Construction Plan

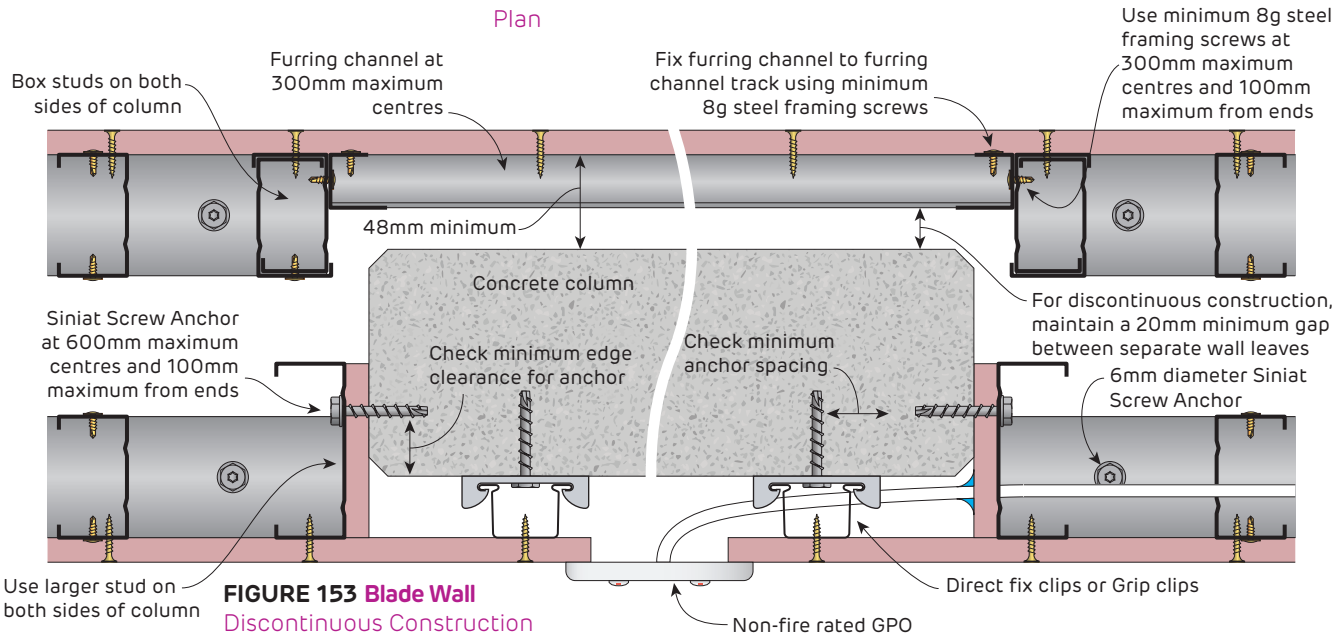

FIGURE 153 Blade Wall Discontinuous Construction Plan

Fire Rated
Internal Wall Built Around Columns

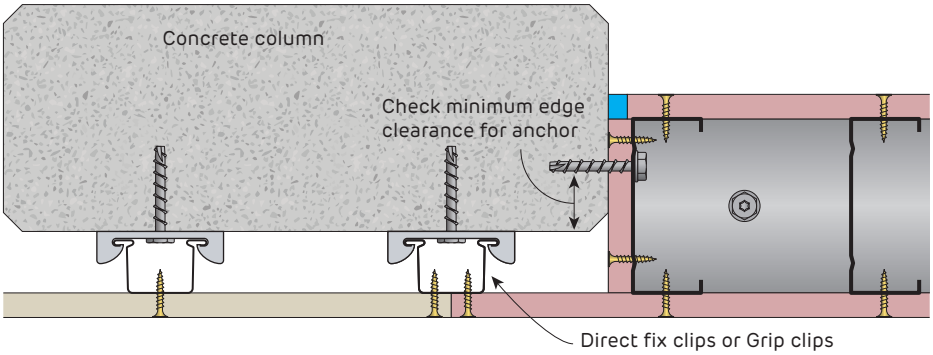

FIGURE 154 Fire rated Partition Wall to Concrete Column
Plan

Fire Rated and Non-Fire Rated
Control Joints in Stud Walls

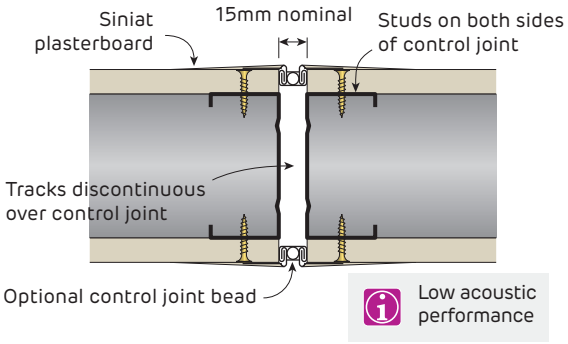

FIGURE 155 Control Joint
Plan

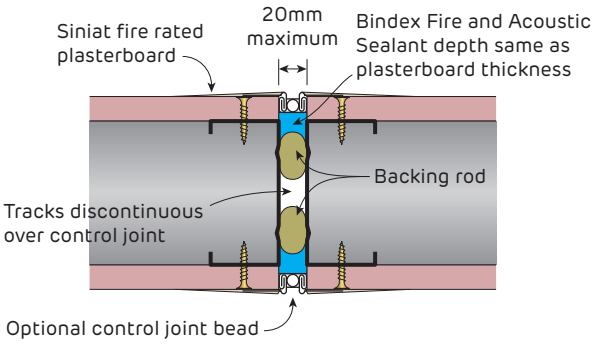

FIGURE 156 Control Joint
Fire rated - 1 layer with control joint bead
Plan

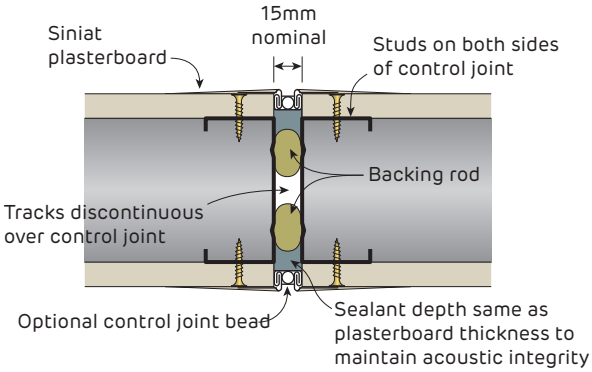

FIGURE 157 Control Joint
Plan

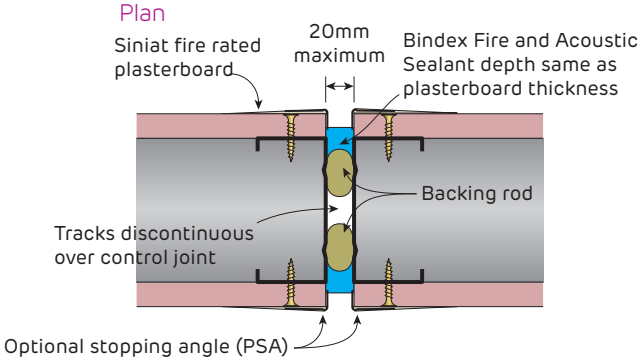

FIGURE 158 Control Joint
Fire rated - 1 layer with stopping angle
Plan

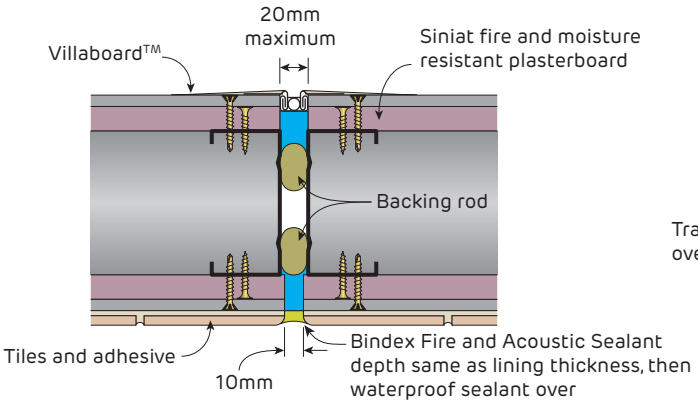

FIGURE 159 Control Joint
Fire rated for wet area
Plan

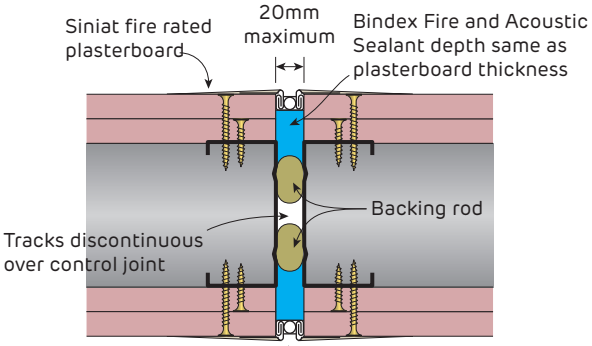

FIGURE 160 Control Joint
Fire rated - 2 layers
Plan

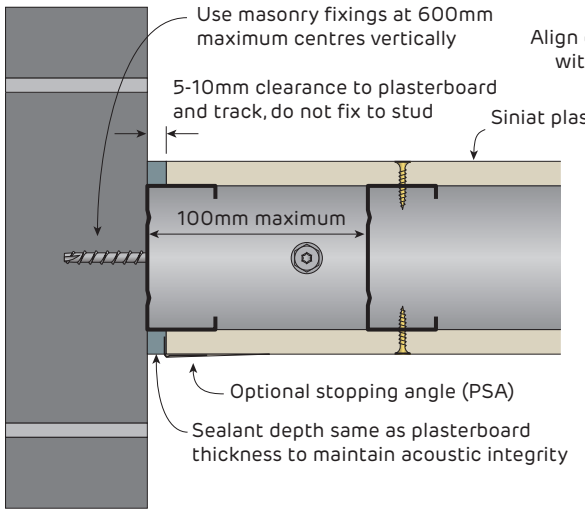

FIGURE 161 Sliding Wall End to Intersecting Wall
Plan

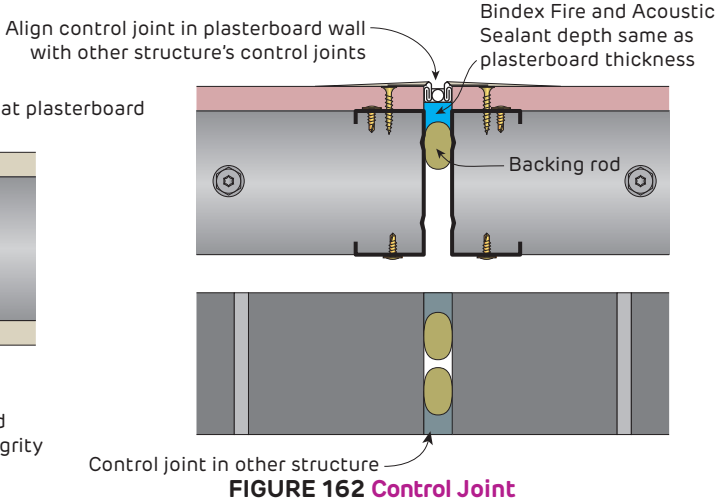

FIGURE 162 Control Joint
Fire rated
Plan

Fire Rated
Fire Penetration Details for Internal Stud Walls

Refer to proprietary fire product manufacturer for performance and installation instructions.

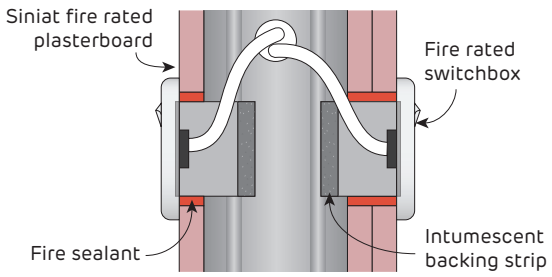

FIGURE 163 Fire Rated Power-point GPO
Example only
Section

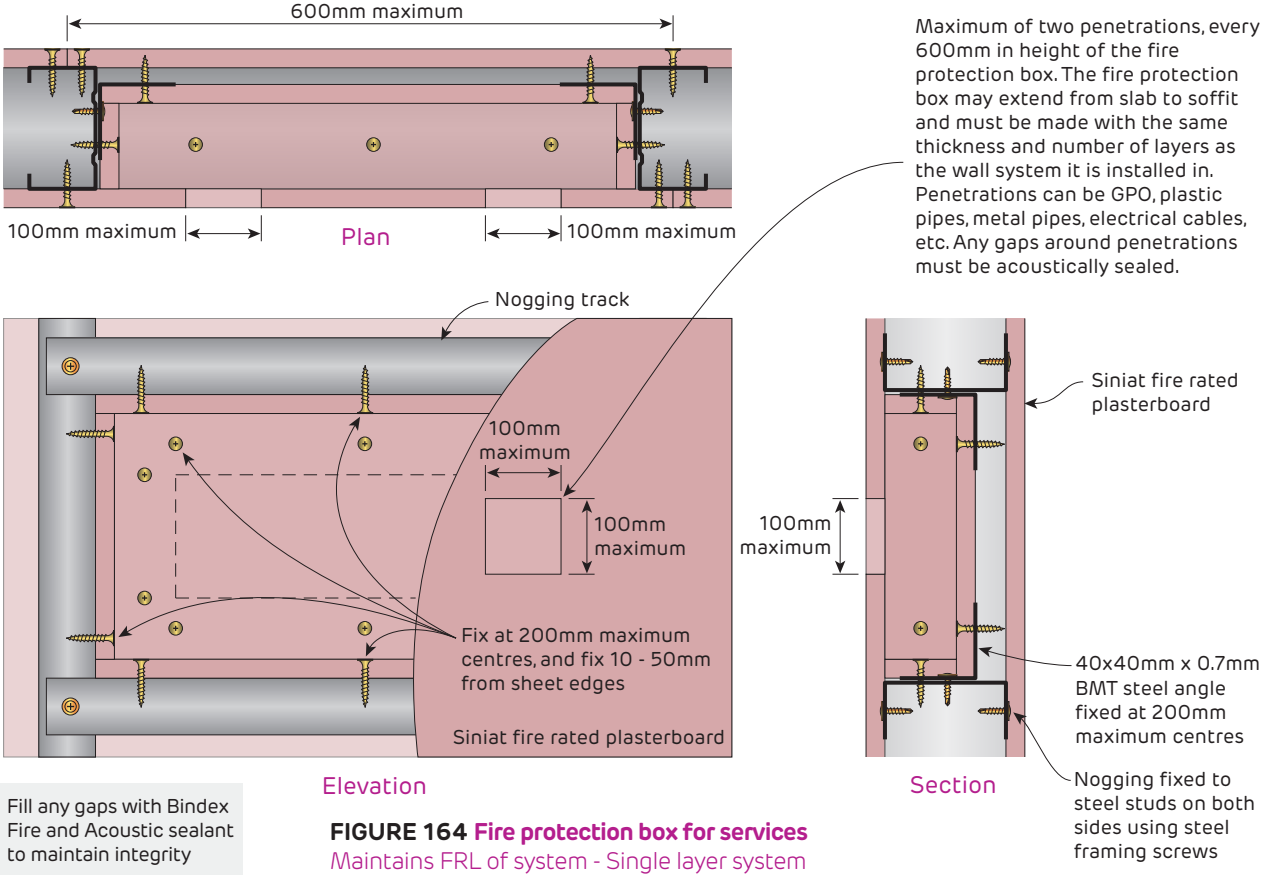

Fill any gaps with Bindex Fire and Acoustic sealant to maintain integrity

FIGURE 164 Fire protection box for services
Maintains FRL of system - Single layer system

Fire Rated

Fire Penetration Details for Internal Stud Walls

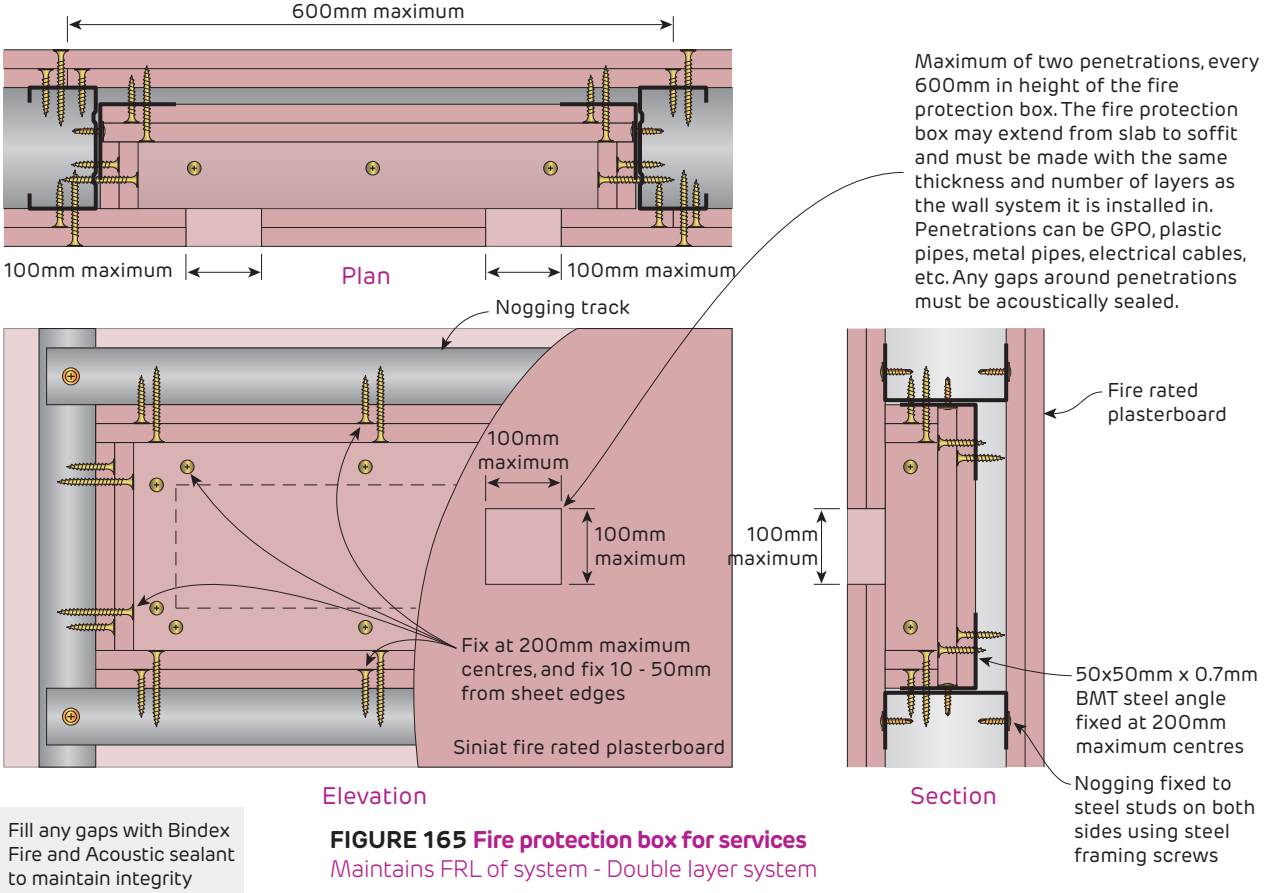

Fill any gaps with Bindex Fire and Acoustic sealant to maintain integrity

FIGURE 165 Fire protection box for services
Maintains FRL of system - Double layer system

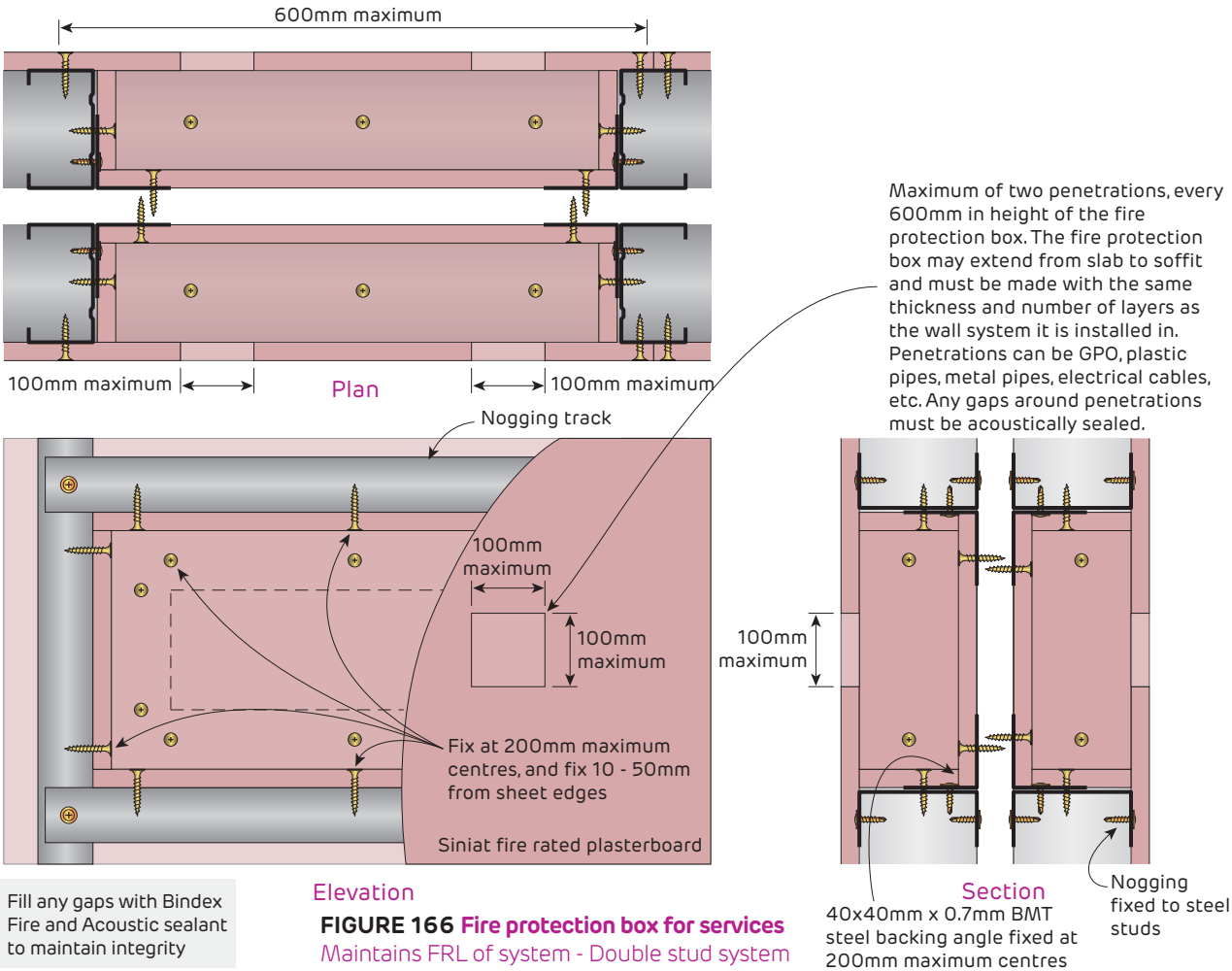

Fill any gaps with Bindex Fire and Acoustic sealant to maintain integrity

FIGURE 166 Fire protection box for services
Maintains FRL of system - Double stud system

Fire Rated
TPS Power Cable Penetration Details for Stud Walls

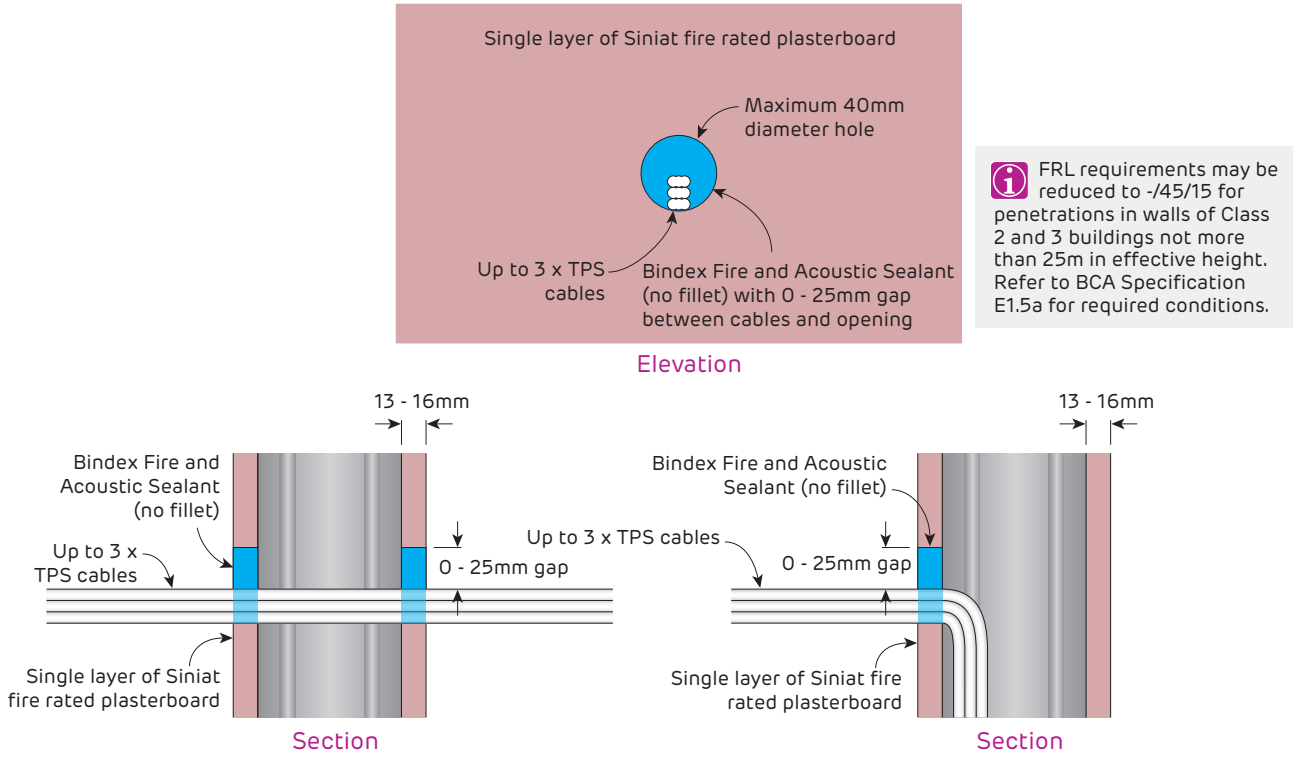

FRL requirements may be reduced to -/45/15 for penetrations in walls of Class 2 and 3 buildings not more than 25m in effective height. Refer to BCA Specification E1.5a for required conditions.

FIGURE 167 TPS Cable Penetration
Single layer system
FRL -/60/30

Fire Rated
Power Cable Penetration Details for Stud Walls

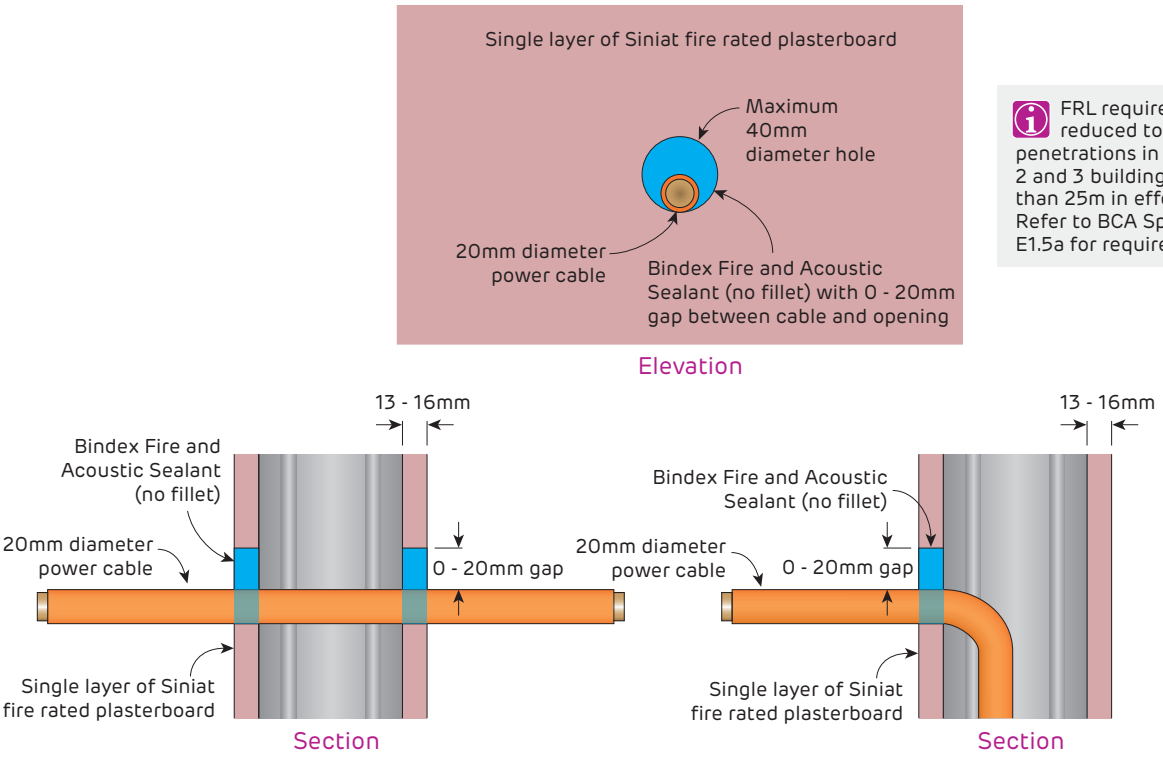

FRL requirements may be reduced to -/45/15 for penetrations in walls of Class 2 and 3 buildings not more than 25m in effective height. Refer to BCA Specification E1.5a for required conditions.

FIGURE 168 Power Cable Penetration
Single layer system
FRL -/60/30

Fire Rated
Cat Network Cable Penetration Details for Stud Walls

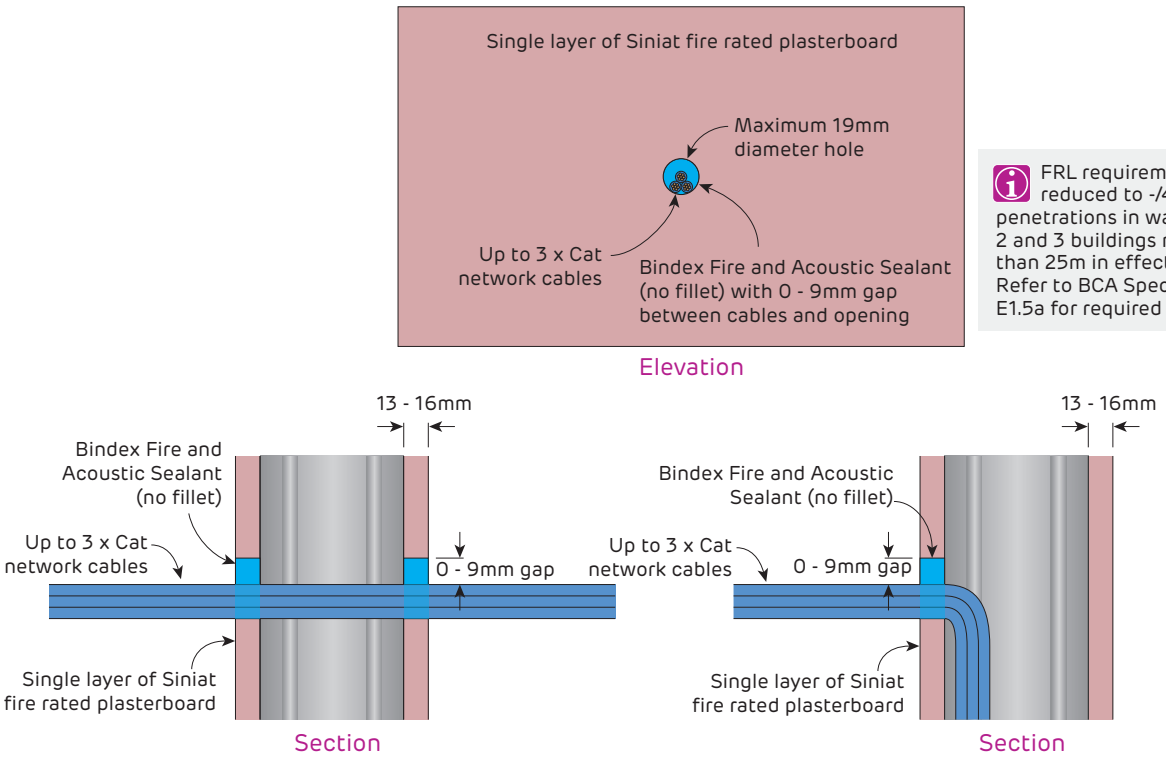

FRL requirements may be reduced to -/45/15 for penetrations in walls of Class 2 and 3 buildings not more than 25m in effective height. Refer to BCA Specification E1.5a for required conditions.

FIGURE 169 Cat Network Cable Penetration
Single layer system
FRL -/60/30

Fire Rated
Power and Telecommunication Cable Penetration Details for Stud Walls

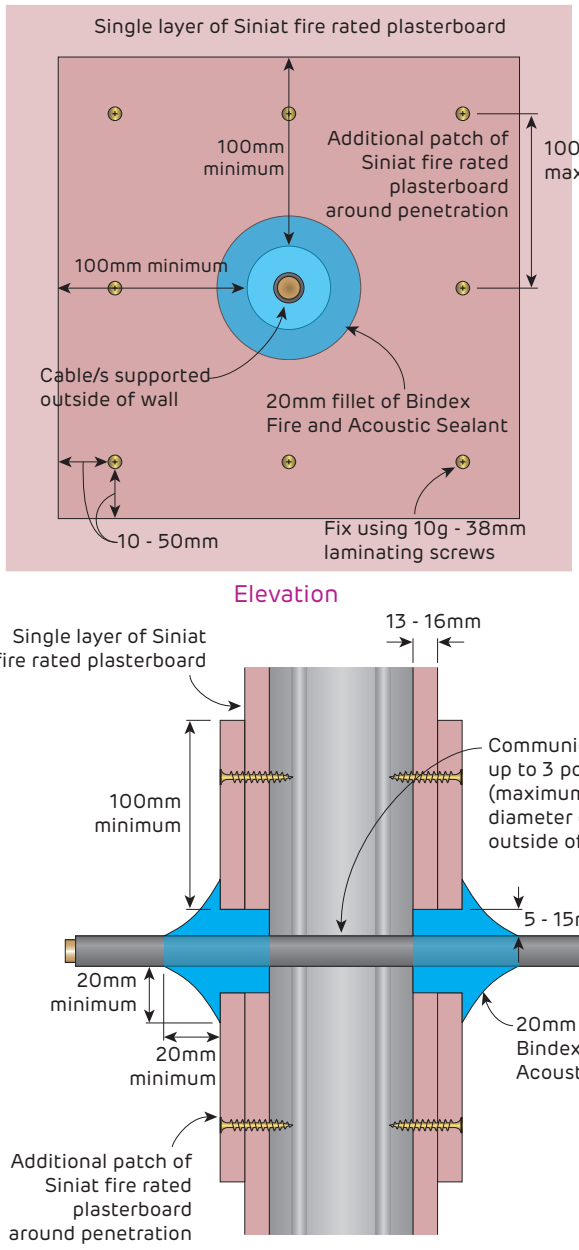

FIGURE 170 Cable Penetration - Communication cables or up to 3 power cables
Single layer system with patch
FRL -/120/60 limited by wall FRL

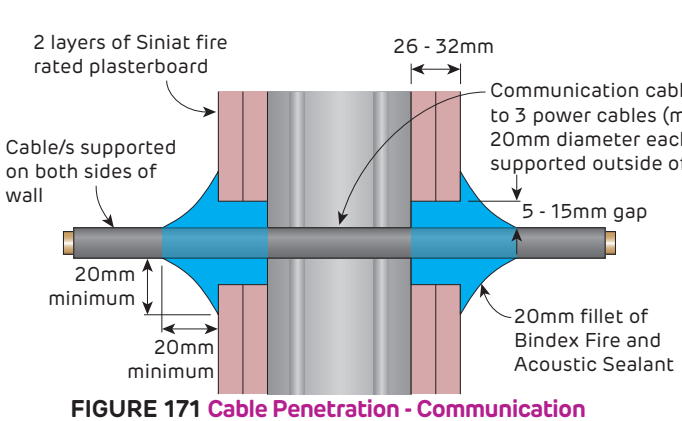

FIGURE 171 Cable Penetration - Communication cables or up to 3 power cables
Double layer system, FRL -/120/60 - Section

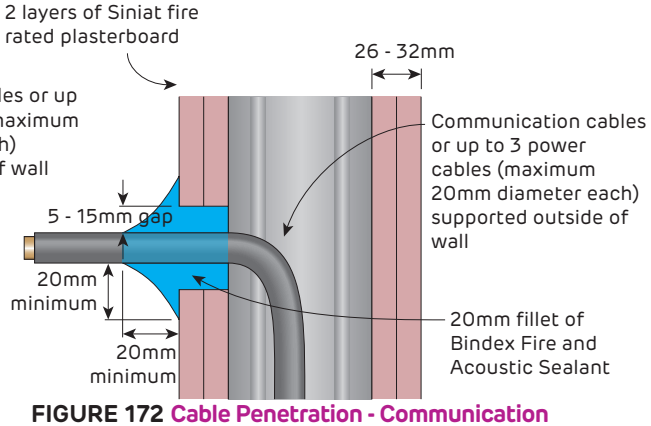

FIGURE 172 Cable Penetration - Communication cables or up to 3 power cables
Double layer system, FRL -/120/60 - Section

Fire Rated
Power and Telecommunication Cable Penetration Details for Stud Walls

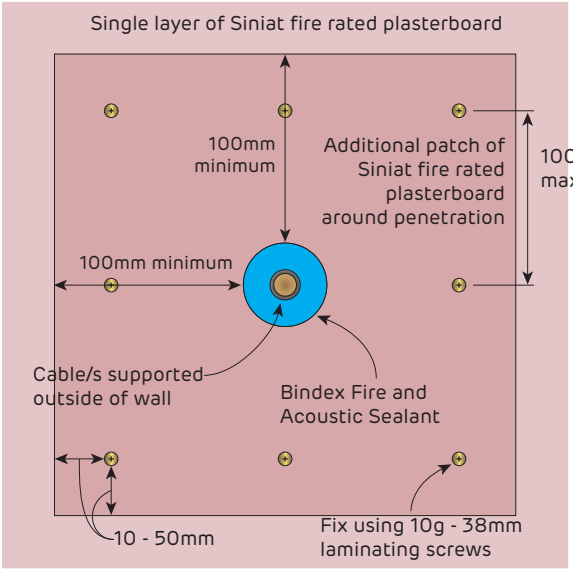

Elevation

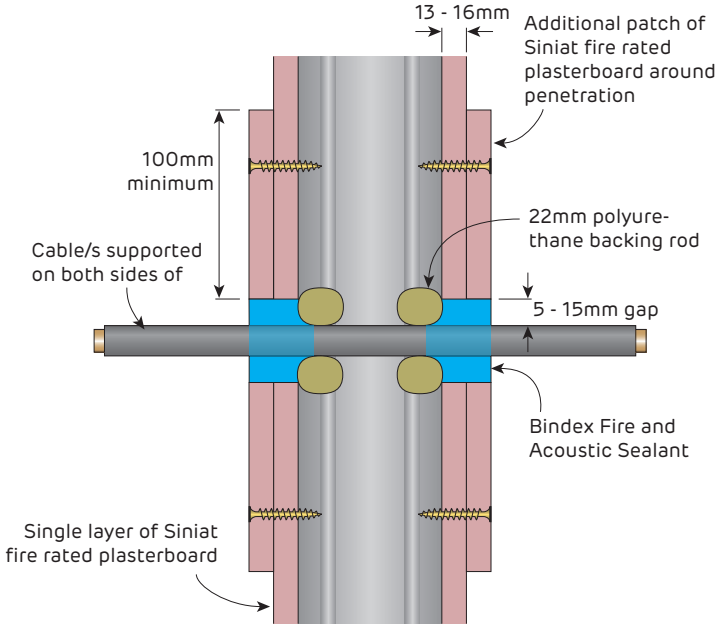

FRL requirements may be reduced to -/45/15 for penetrations in walls of Class 2 and 3 buildings not more than 25m in effective height. Refer to BCA Specification E1.5a for required conditions.

FIGURE 173 Cable Penetration - All PVC / XLPE covered copper cables
Single layer system with patch
FRL -/120/- or FRL -/120/30 with 20mm fillet of fire rated sealant on both sides, limited by wall FRL

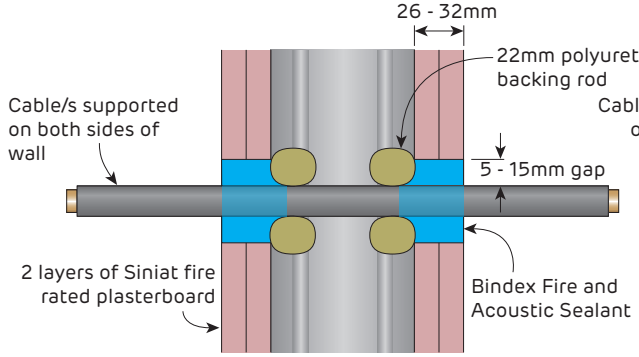

FIGURE 174 Cable Penetration - All PVC / XLPE covered copper cables
Double layer system, FRL -/120/- or FRL -/120/30 with 20mm fillet of fire rated sealant on both sides - Section

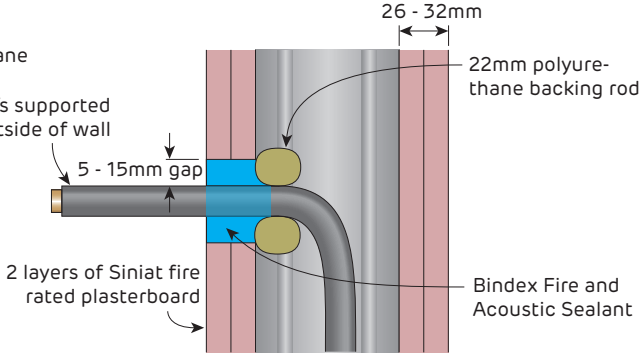

FIGURE 175 Cable Penetration - All PVC / XLPE covered copper cables
Double layer system, FRL -/120/- or FRL -/120/30 with 20mm fillet of fire rated sealant on both sides - Section

Fire Rated
Power and Telecommunication Cable Penetration Details for Stud Walls

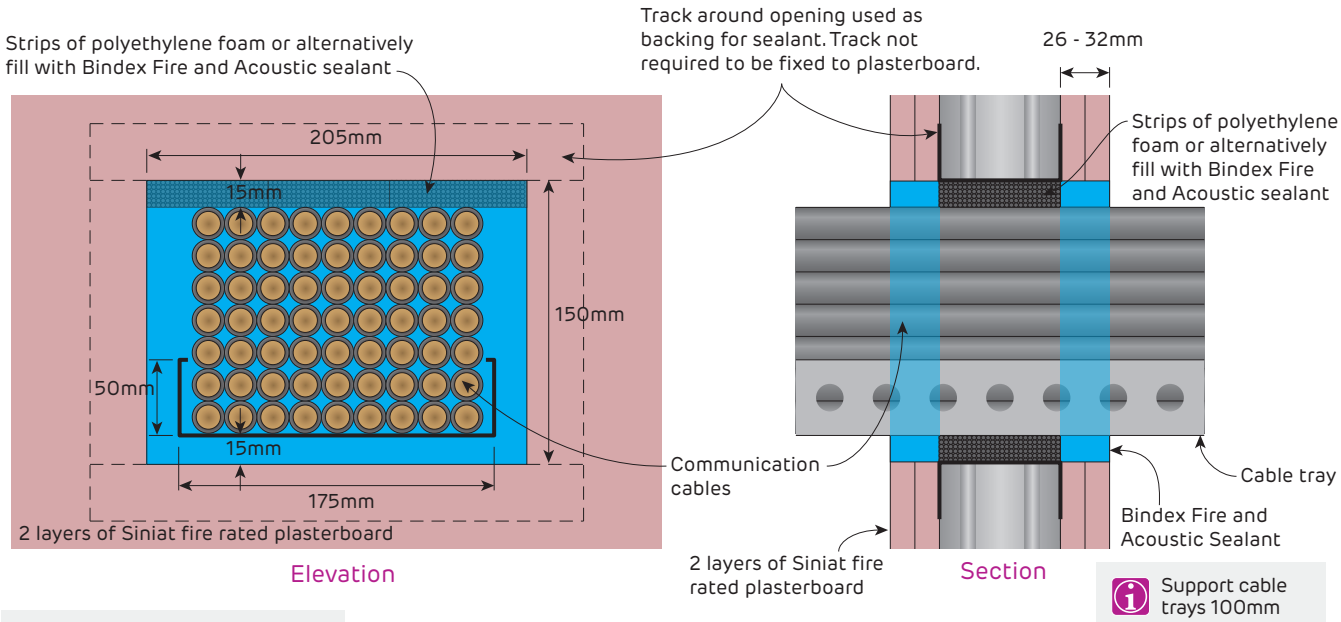

Refer to Bindex Product Data Sheet for more information

FIGURE 176 Telecommunication Cable Tray Penetration
FRL -/120/- or FRL -/120/60 with a 20mm fillet of fire rated sealant on both sides

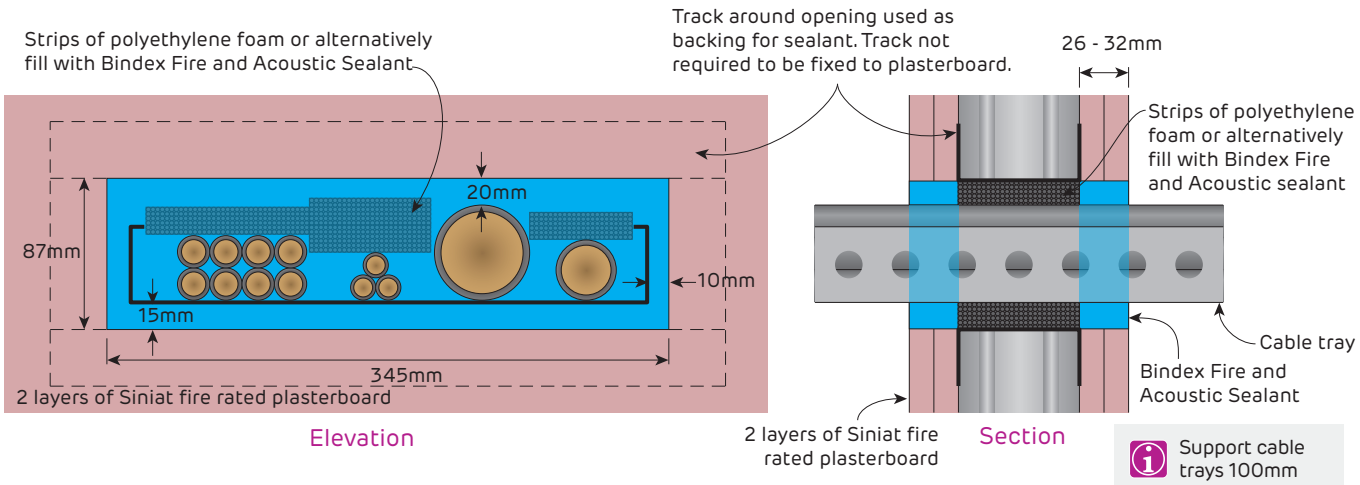

FIGURE 177 Various Power Cable Tray Penetration
FRL -/120/- or FRL -/120/30 with 20mm fillet of fire rated sealant on both sides

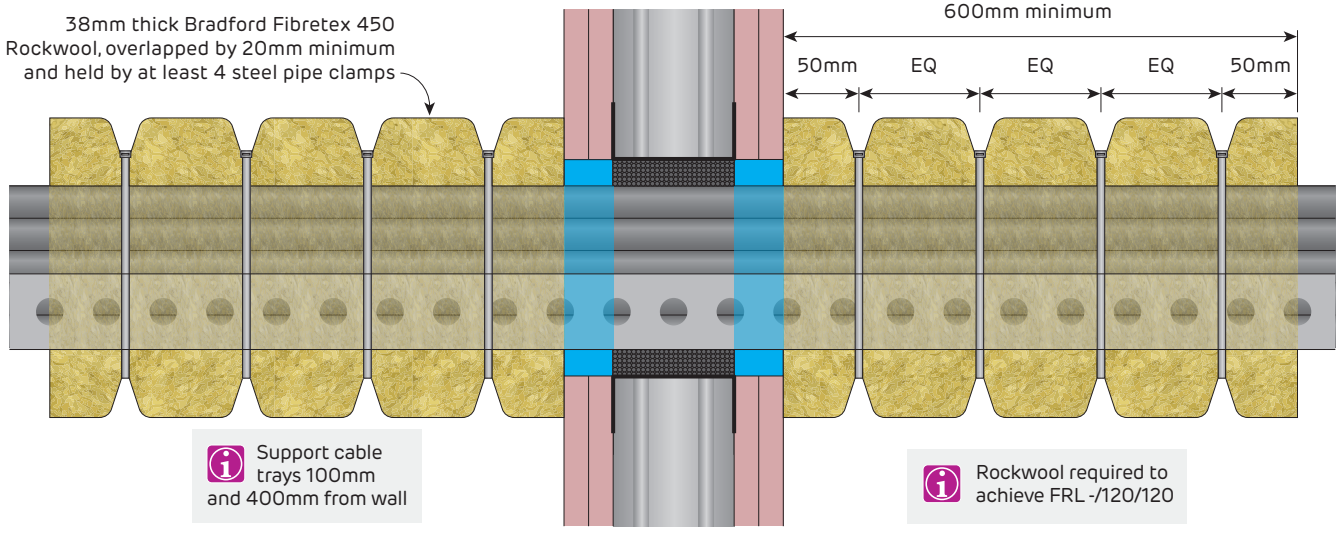

FIGURE 178 Power and Telecommunication Cables Wrapped with Rockwool
FRL -/120/120
Section

Fire Rated
Metal Pipe Penetration Details for Stud Walls

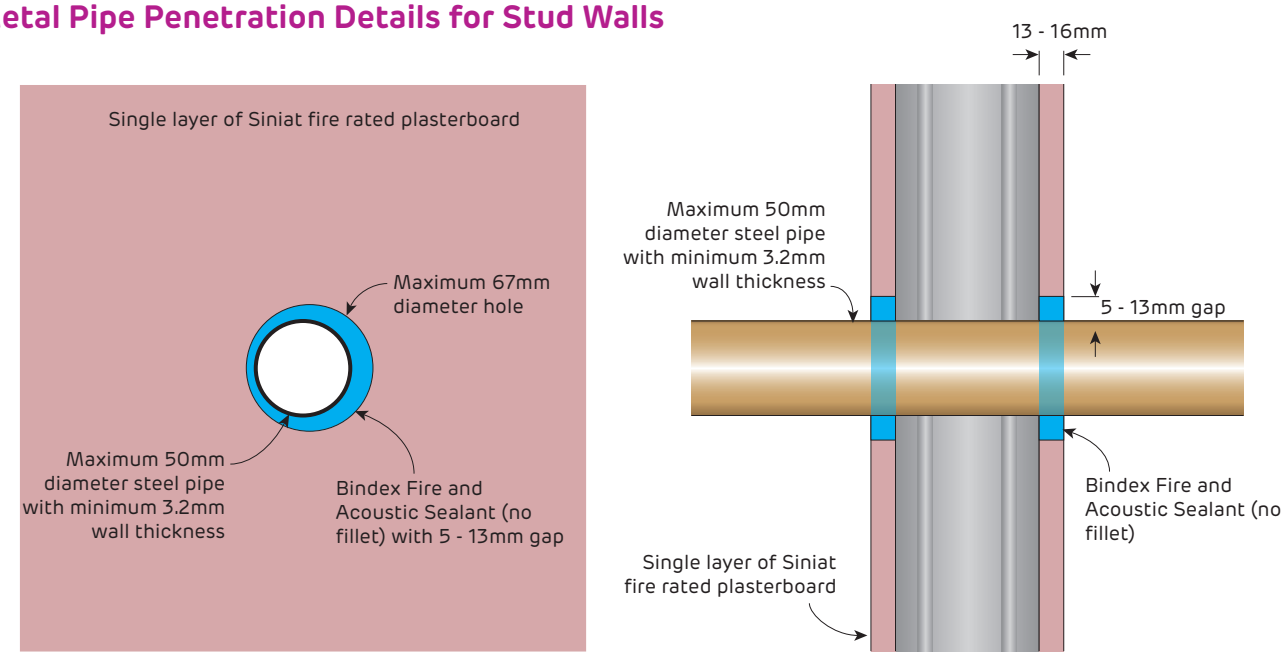

FIGURE 179 50mm diameter Steel Pipe Penetration - Single Layer System
FRL -/60/30

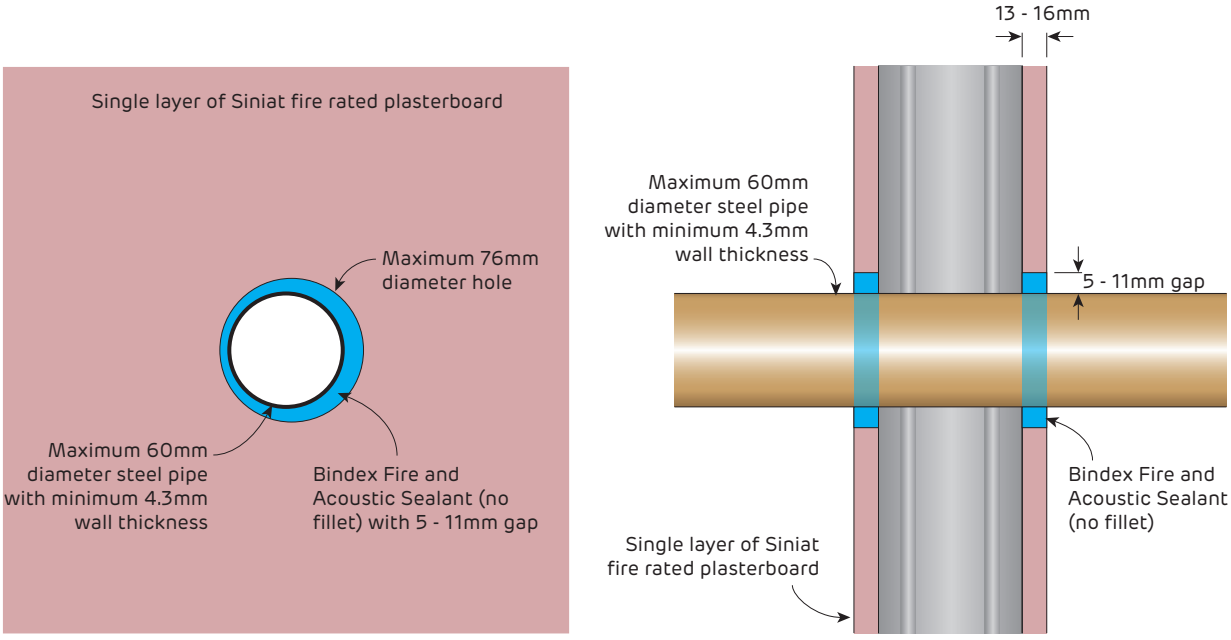

FIGURE 180 60mm diameter Steel Pipe Penetration - Single Layer System
FRL -/60/30

The insulation criteria for the metal pipe penetration may not be needed. Refer to NCC Volume One, C3.15 (a) (ii)

Fire Rated
Metal Pipe Penetration Details for Stud Walls

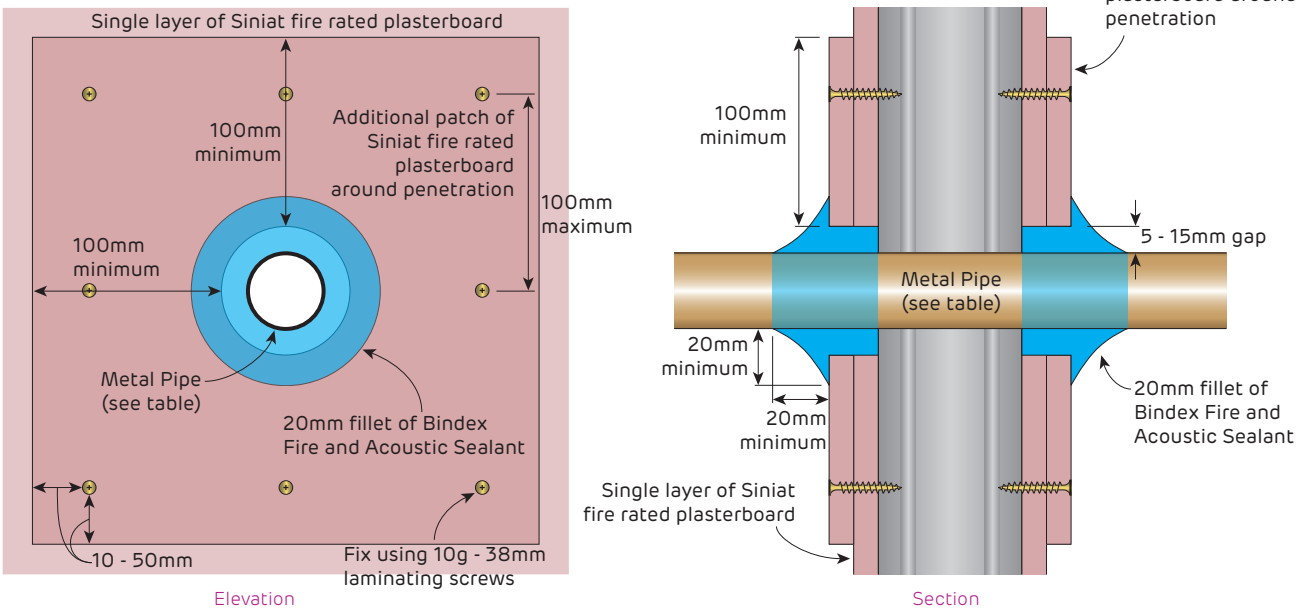

FIGURE 181 Metal Pipe Penetration - Single Layer System with Patch
FRL -/180/- limited by wall FRL

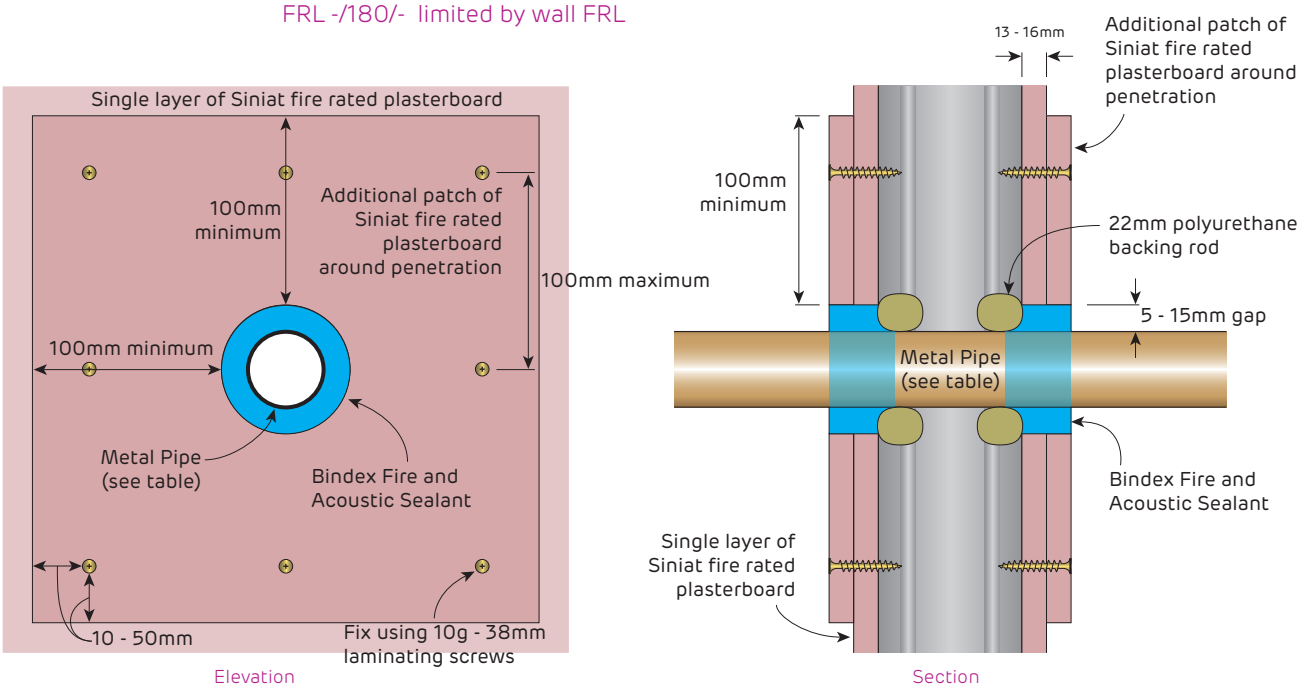

FIGURE 182 Metal Pipe Penetration - Single Layer System with Patch
FRL -/180/- limited by wall FRL

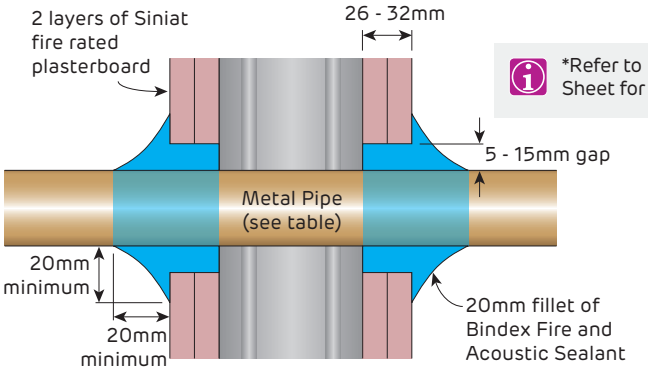

FIGURE 183 Metal Pipe Penetration
Double Layer System FRL -/180/- limited by wall FRL
Section

*Refer to Bindex Product Data Sheet for more information

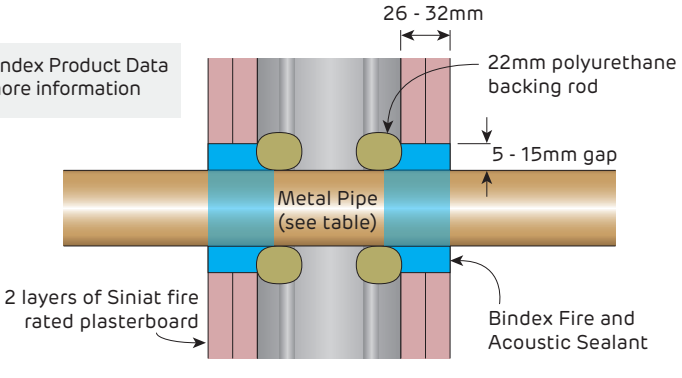

FIGURE 184 Metal Pipe Penetration
Double Layer System FRL -/180/- limited by wall FRL
Section

Fire Rated
Metal Pipe Penetration Details for Stud Walls

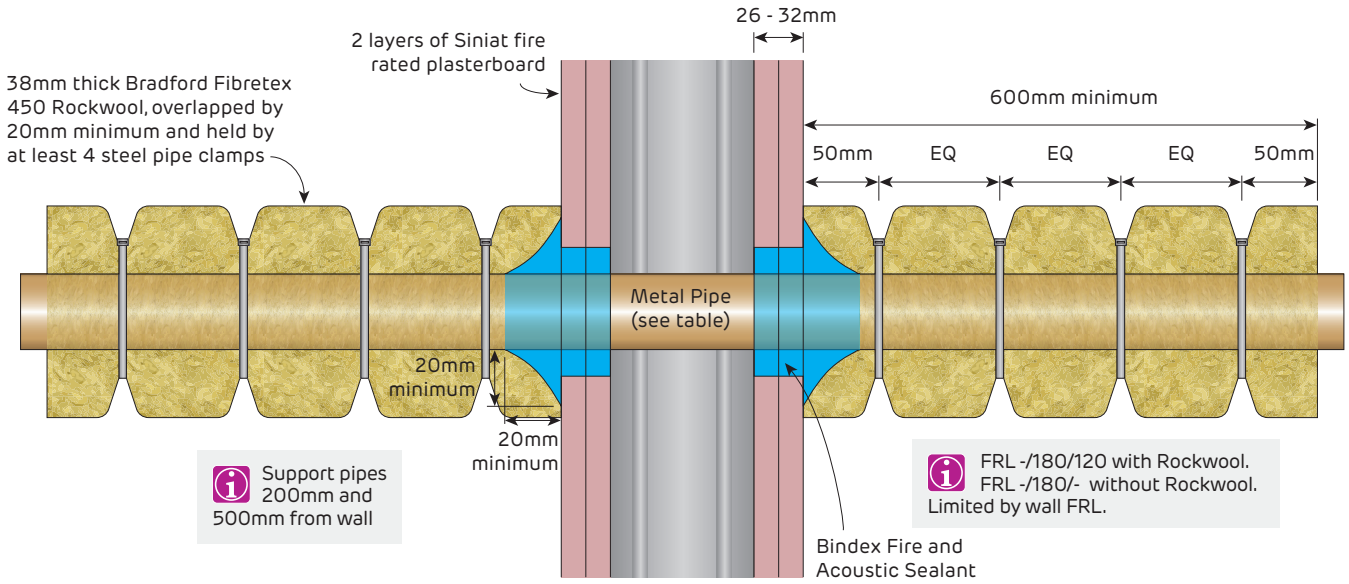

FIGURE 185 Metal Pipe Penetration wrapped with Rockwool
FRL -/180/120 limited by wall FRL
Section

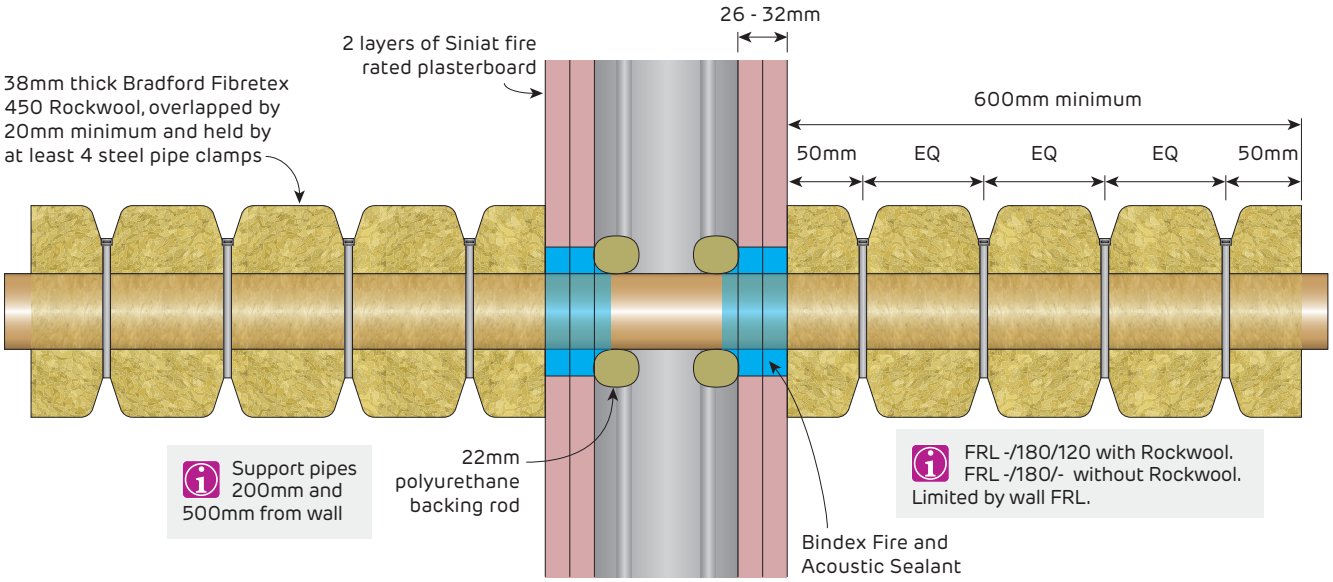

FIGURE 186 Metal Pipe Penetration wrapped with Rockwool
FRL -/180/120 limited by wall FRL
Section

Table 19 Sizes for Copper, Brass or Ferrous Pipes

Pipe Nominal Size (mm)	Maximum Pipe Diameter (mm)	Minimum Wall Thickness (mm)
32	31.75	0.91
40	38.1	0.91
50	50.8	0.91
65	63.5	0.91
80	76.2	1.22
90	88.9	1.22
100	101.6	1.22
125	127	1.42
150	152.4	1.63

Fire Rated

Flush Patching of Fire Rated Wall Systems - Maximum 150mm Metal Pipe

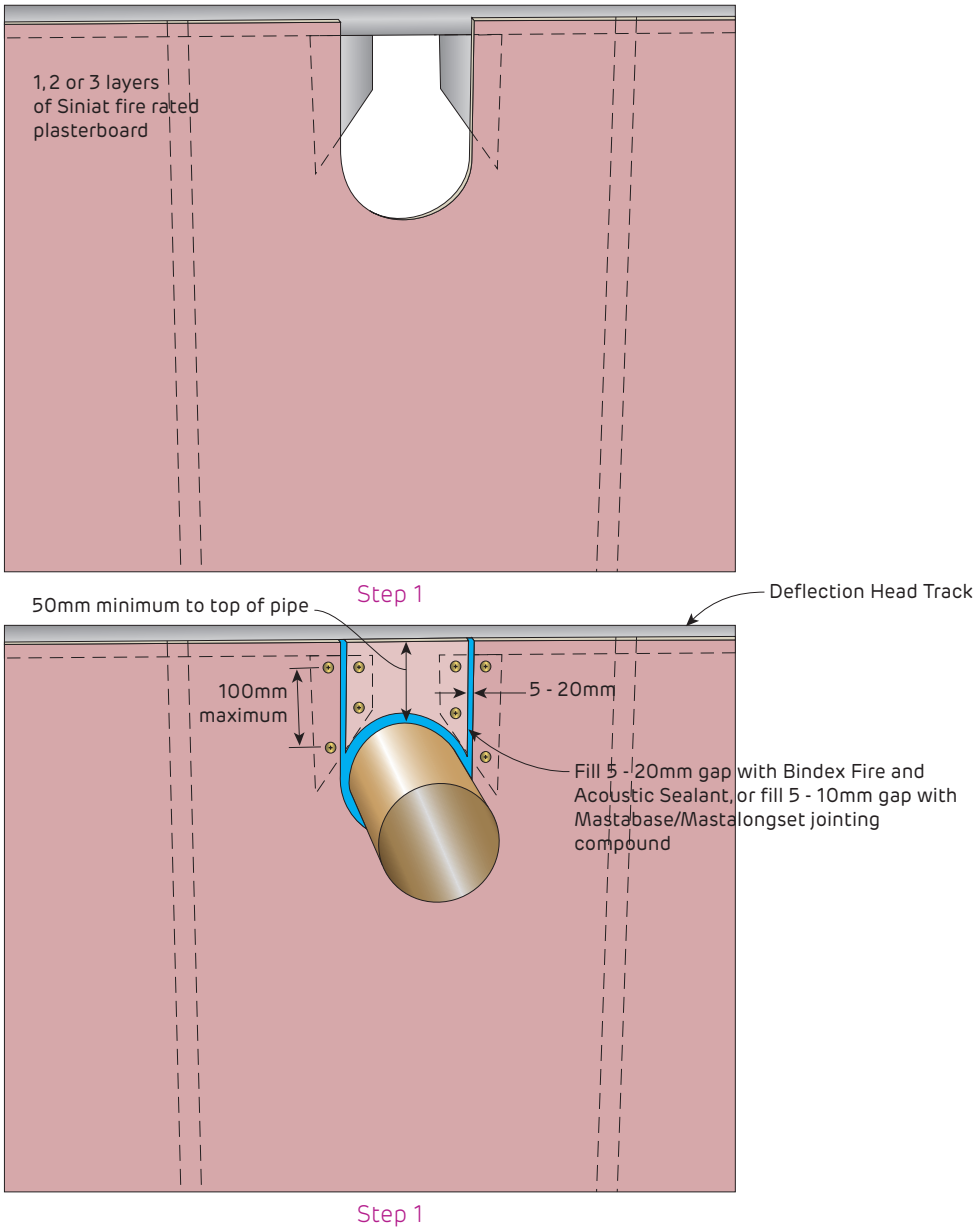

FIGURE 187 Flush patch with the lining with pipe penetration
Maximum 150mm pipes as per Table 19 - Refer to previous pages for FRL

Fire Rated

Flush Patching of Fire Rated Wall Systems - Maximum 250mm Metal or PVC Pipe

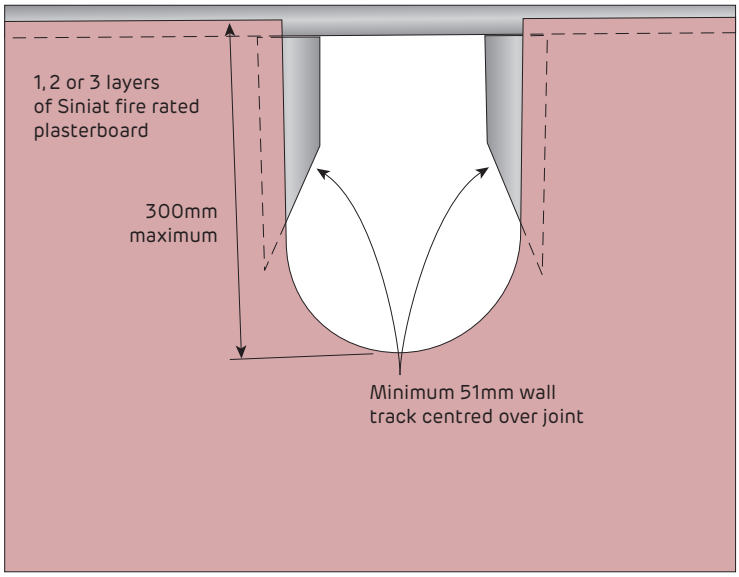

Step 1

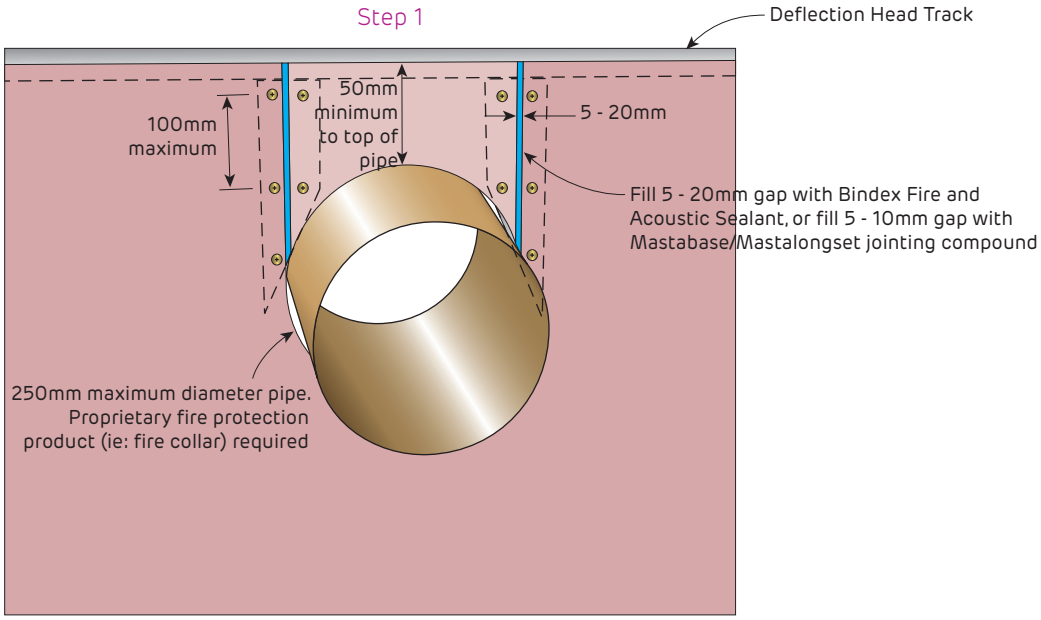

Step 2

Refer to proprietary fire protection product manufacturer for performance and installation instructions.

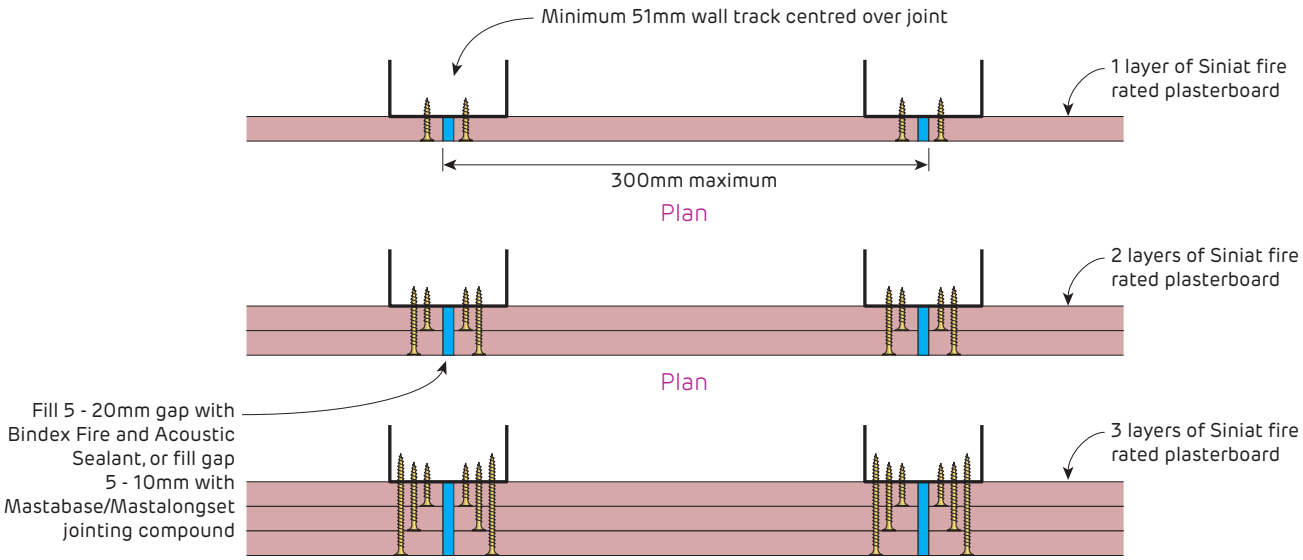

FIGURE 188 Flush patch with the lining with pipe penetration
Maximum 250mm diameter pipe - FRL depends on selected proprietary penetration seal

Fire Rated

Patching of Pipe Near Deflection Head Track - Single Layer - 50mm or 60mm dia Steel Pipe

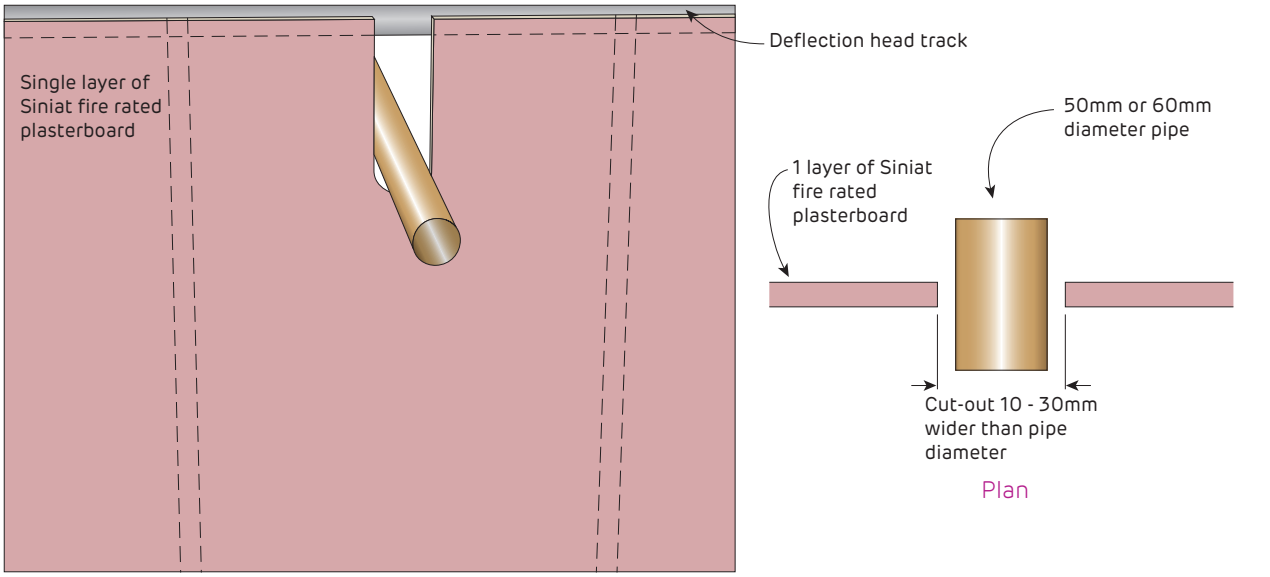

Step 1

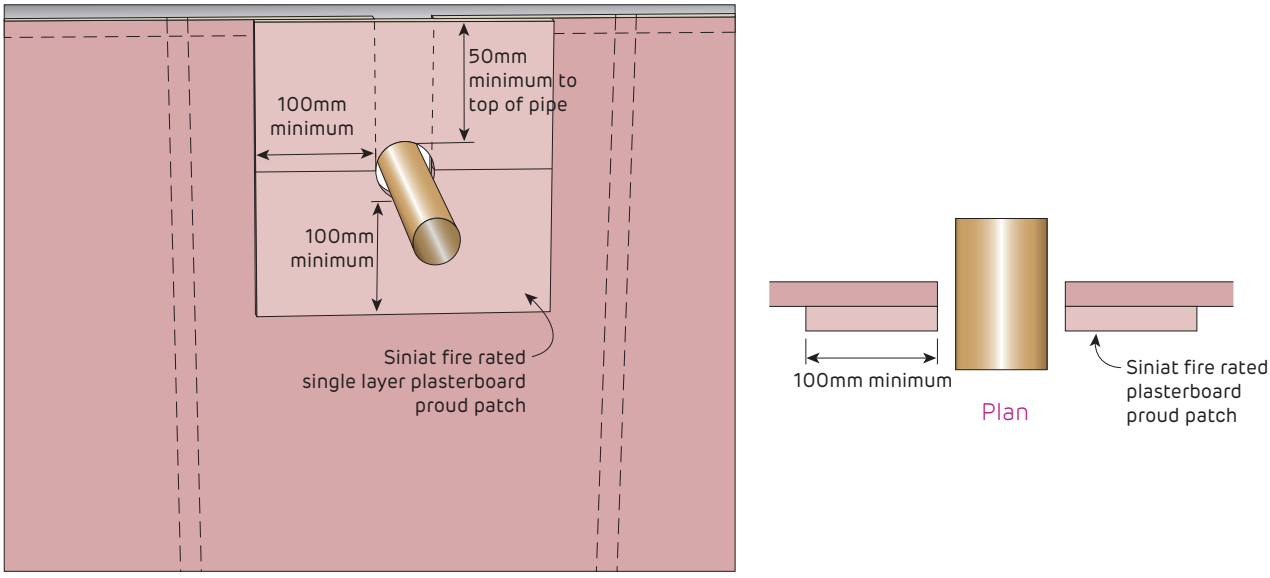

Step 2

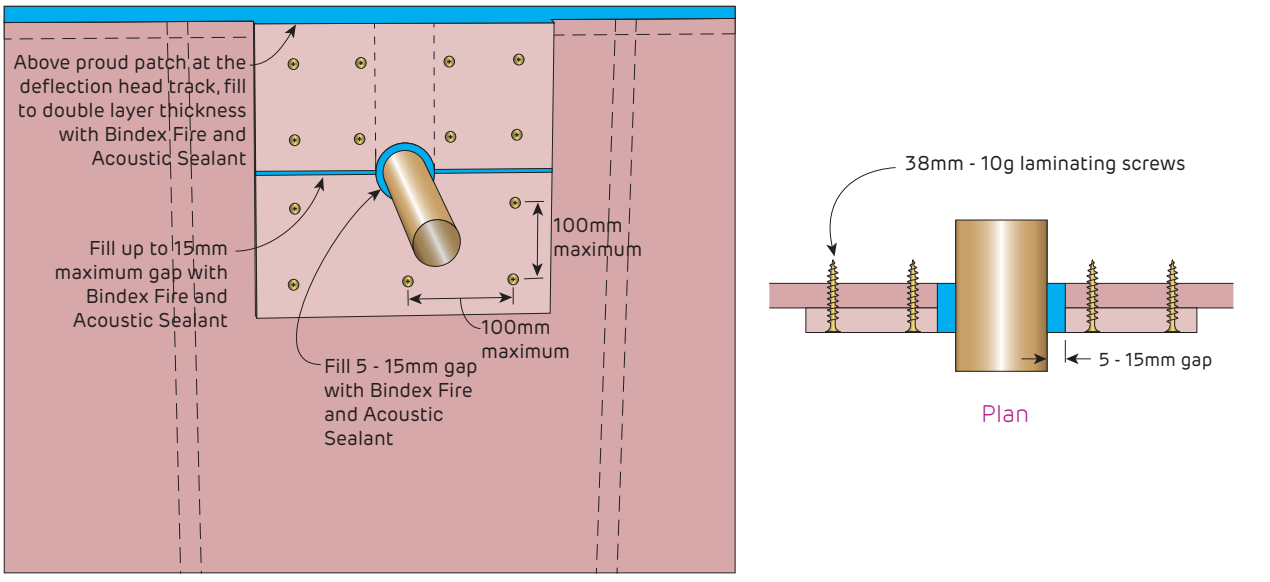

Step 3

FIGURE 189 Proud patch around pipe penetration near deflection head track
Maximum 60mm diameter pipe - FRL -/60/30

Fire Rated

Patching of Pipe Near Deflection Head Track - Single Layer - Maximum 150mm Metal Pipe

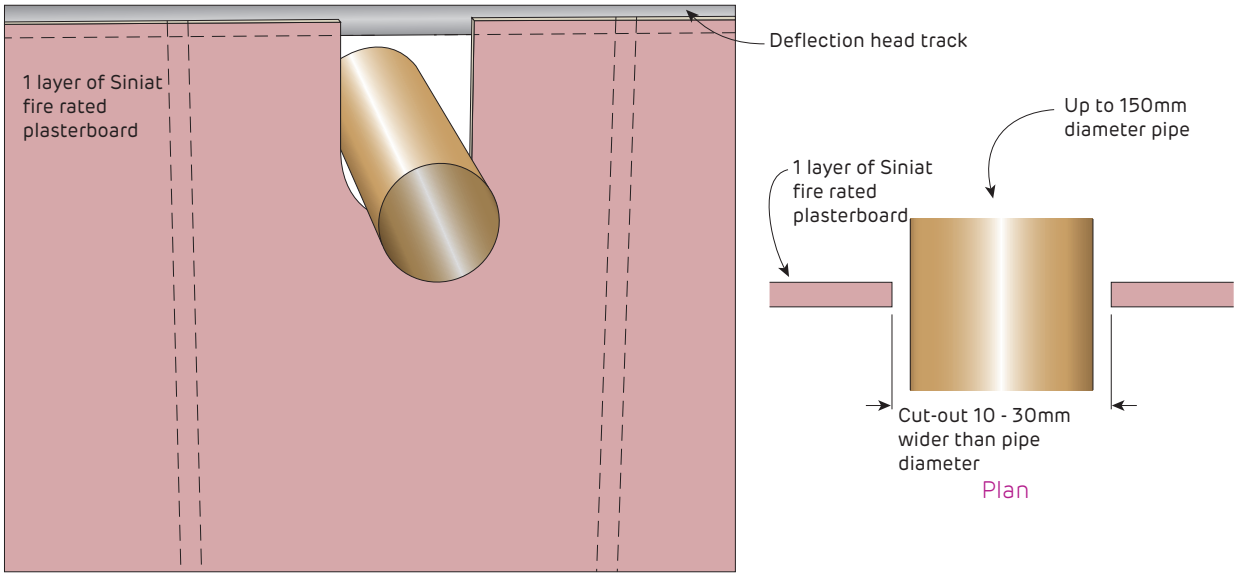

FIGURE 190 **Proud patch around pipe penetration near deflection head track**
Maximum 150mm pipes as per Table 19, FRL -/180/- or -/180/120 with Rockwool as previously shown, with FRL limited by wall FRL

Fire Rated

Patching of Pipe Near Deflection Head Track - 2 Layers - Maximum 150mm Pipe

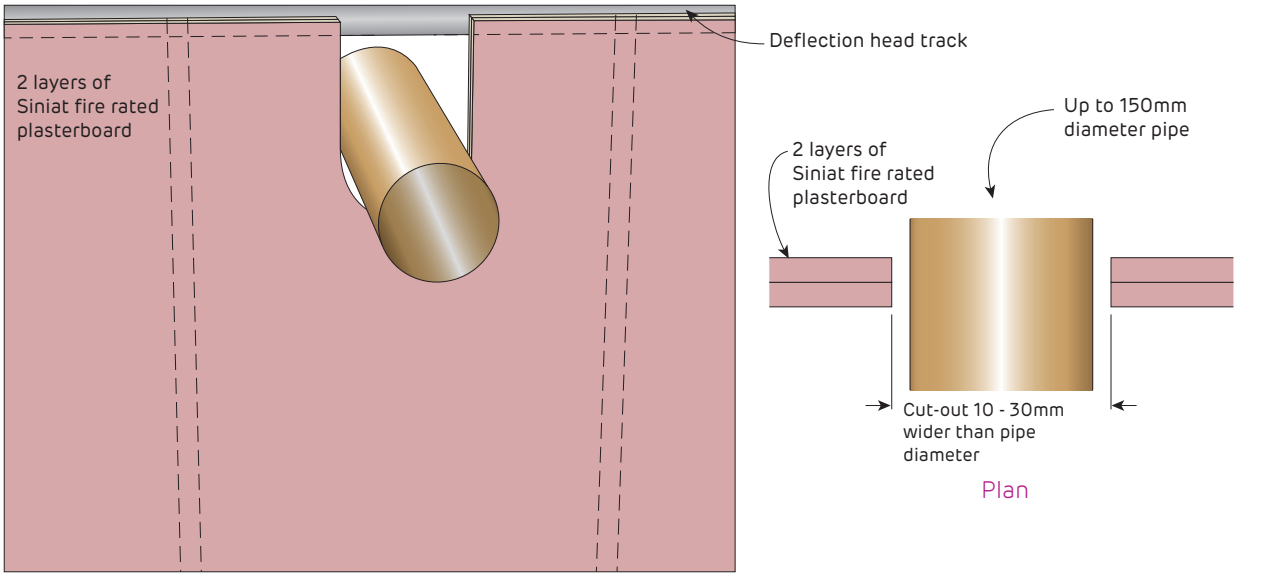

Step 1

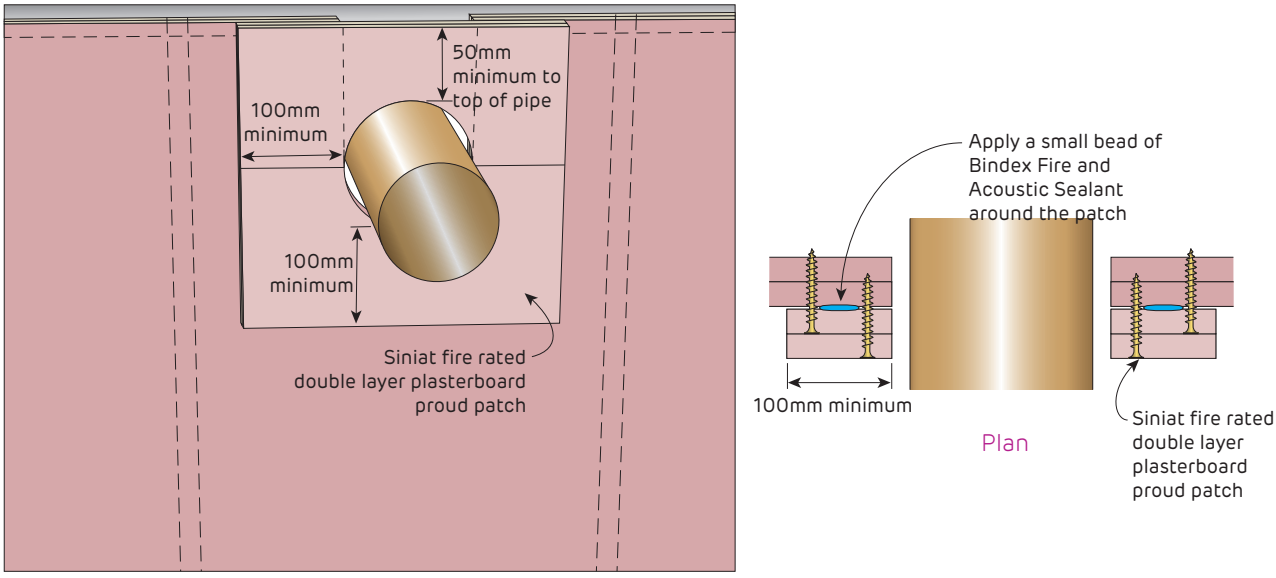

Step 2

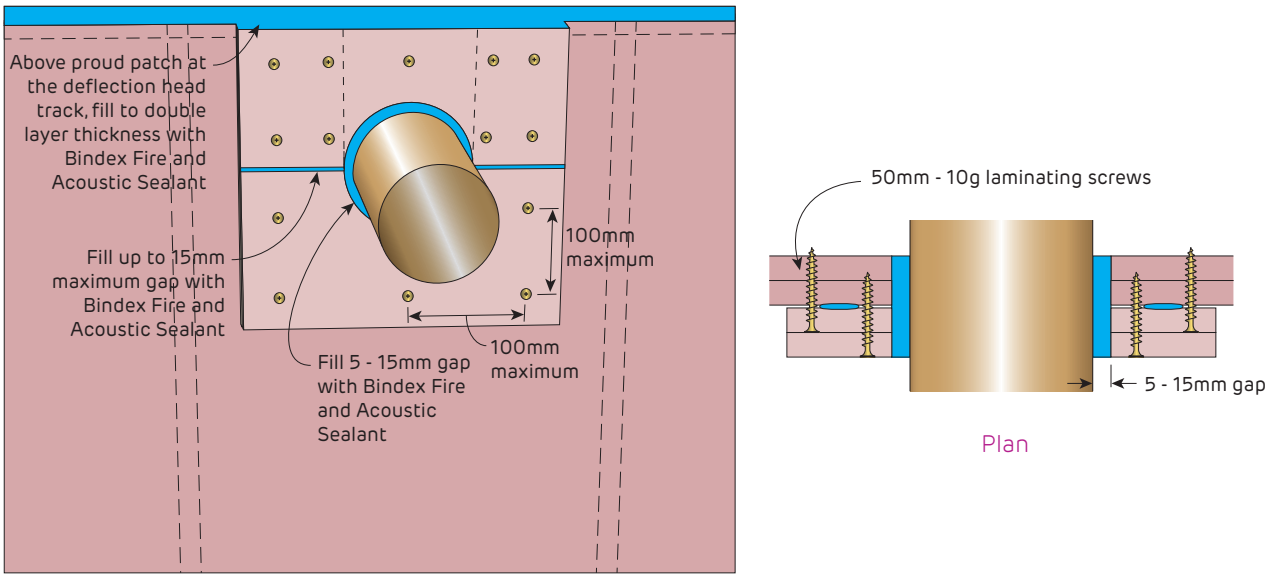

Step 3

FIGURE 191 **Proud patch around pipe penetration near deflection head track**
Maximum 150mm pipes as per Table 19, FRL -/180/- or -/180/120 with Rockwool as previously shown, with FRL limited by wall FRL

Fire Rated
PVC Pipe Penetration Detail for Stud Walls

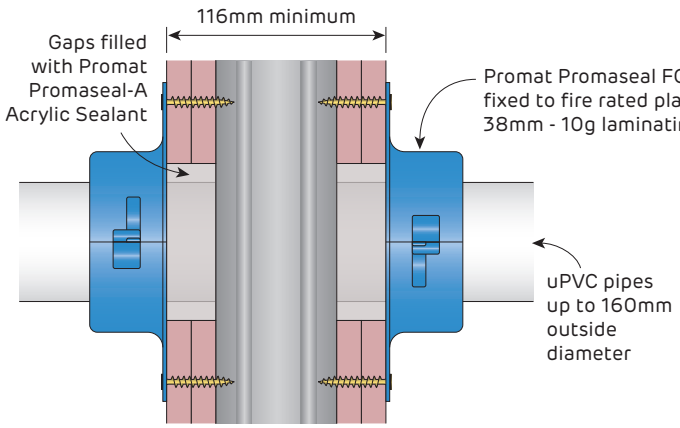

FIGURE 192 Fire Collar for Plastic Pipes
Promat Promaseal FC Retrofit Collar Up to FRL -/120/120 - Section

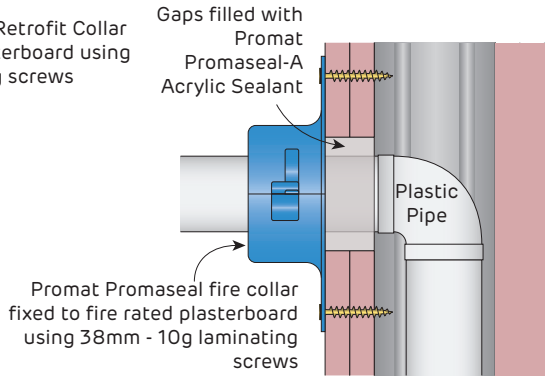

FIGURE 193 Fire Collar for Plastic Pipes
Promat Promaseal FC Retrofit Collar Up to FRL -/120/120 - Section

Refer to Promat for specific performance and installation instructions

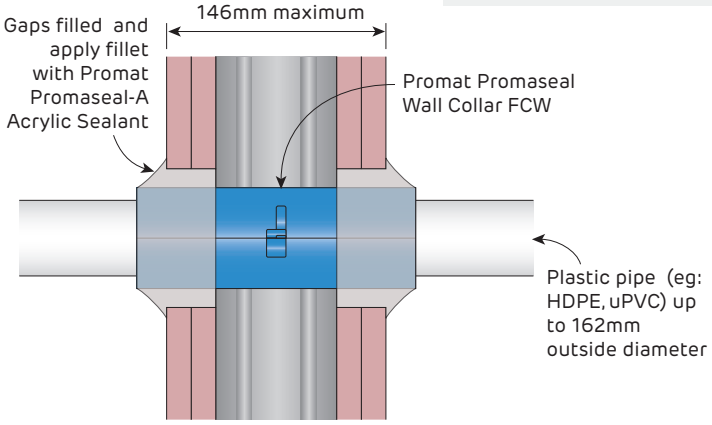

FIGURE 194 Fire Collar for Plastic Pipes
Promat Promaseal Wall Collar - Up to FRL -/120/120 Section

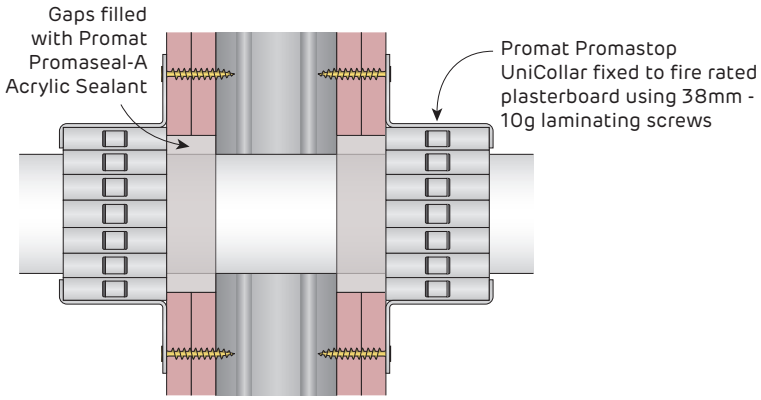

FIGURE 195 Fire Collar for Plastic Pipes
Promat Promastop UniCollar - Up to FRL -/120/120 Section

PVC pipe size limited to 100mm maximum diameter using Promastop UniCollar in FRL -/60/60 walls

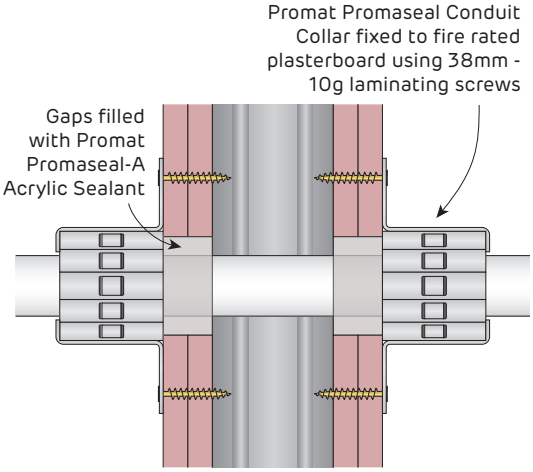

FIGURE 196 Fire Collar for Plastic Conduit
Promat Promaseal Conduit Collar - Up to FRL -/120/120 Section

Fire Rated
PVC Pipe Clash with Stud Walls

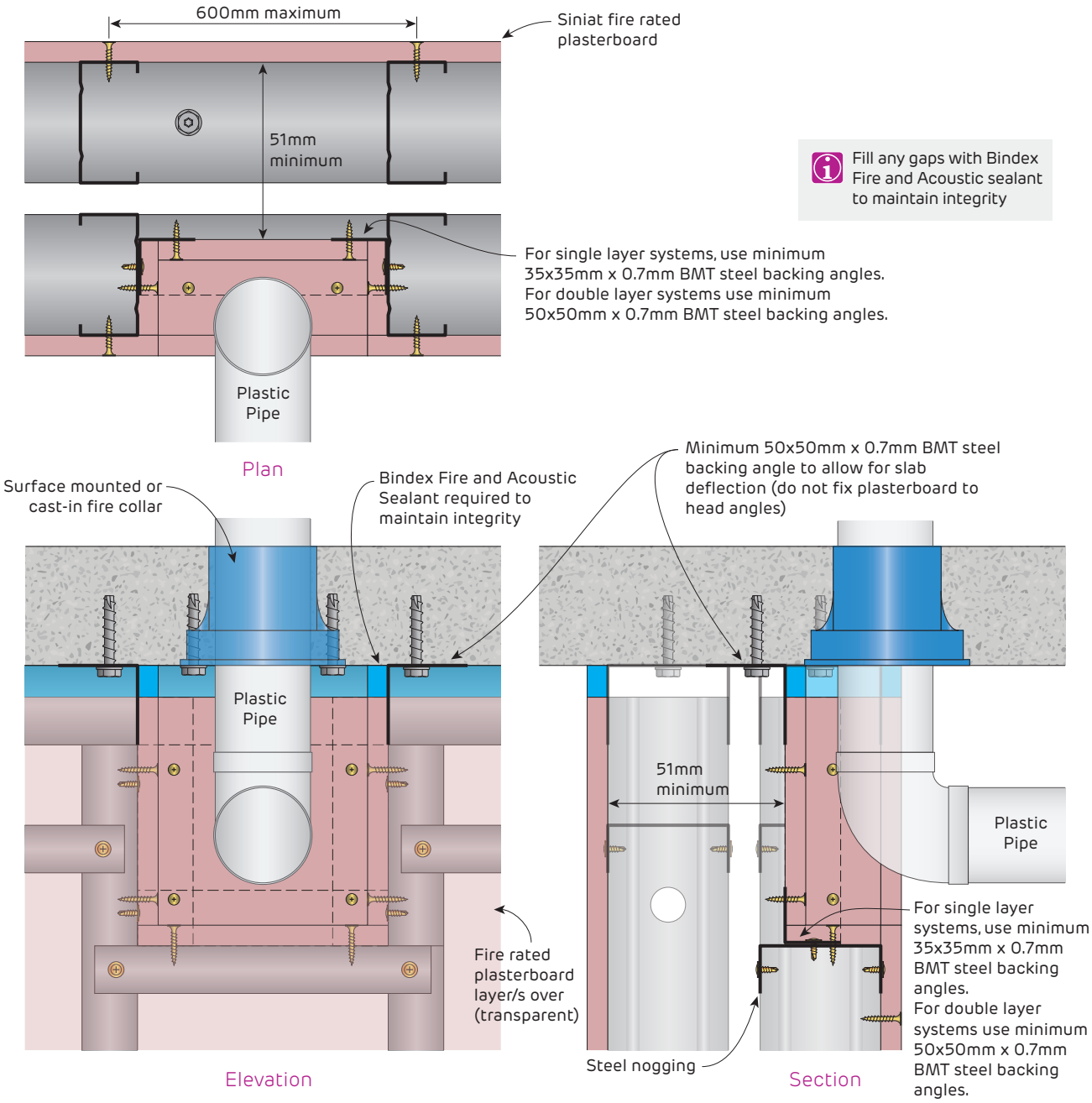

FIGURE 197 Alcove for Plastic Pipe clash through Head Track
Wall FRL 60/60/60 with 16mm fire rated plasterboard on both sides
Wall FRL 90/90/90 with 2 x 13mm fire rated plasterboard on both sides
Wall FRL 120/120/120 with 2 x 16mm fire rated plasterboard on both sides
Section

Fire Rated
Plasterboard Joints with Bindex Fire and Acoustic Sealant

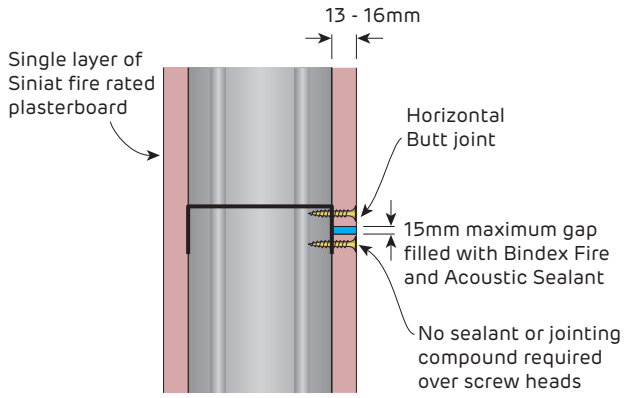

FIGURE 198 Horizontal Joints in Single Layer Systems
Butt Joints Only
Section

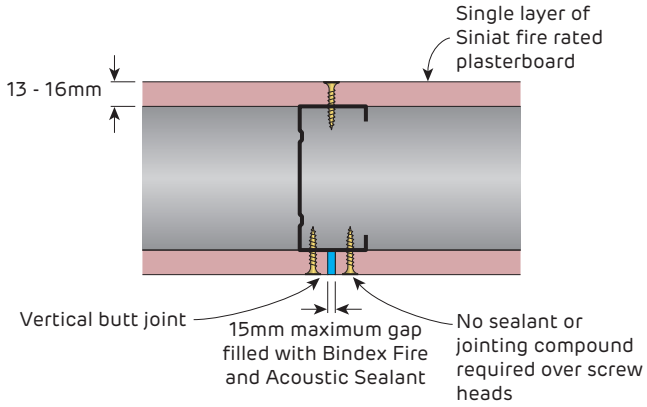

FIGURE 199 Vertical Joints in Single Layer Systems
Butt Joints Only
Plan

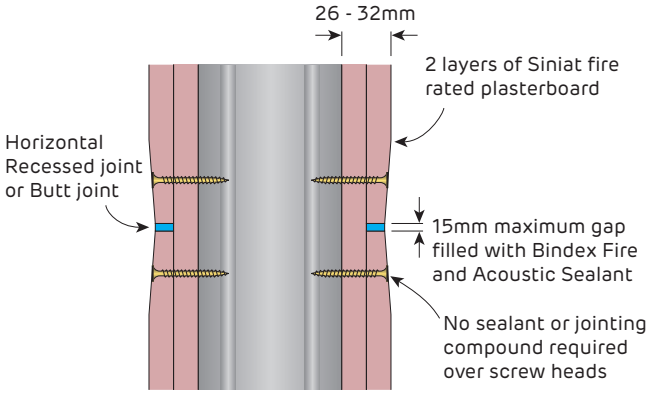

FIGURE 200 Horizontal Joints in Double Layer Systems
Recessed and Butt Joints
Section

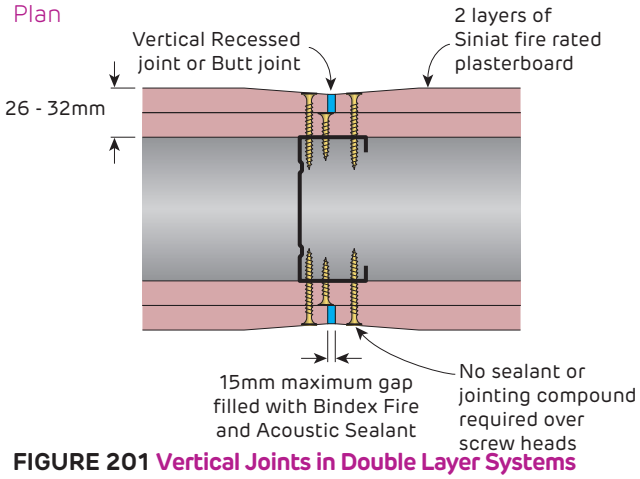

FIGURE 201 Vertical Joints in Double Layer Systems
Recessed and Butt Joints
Plan

Fill any gaps with Bindex Fire and Acoustic sealant to maintain integrity

Fire Rated
Fire Damper or Access Panel Opening Detail for Stud Walls

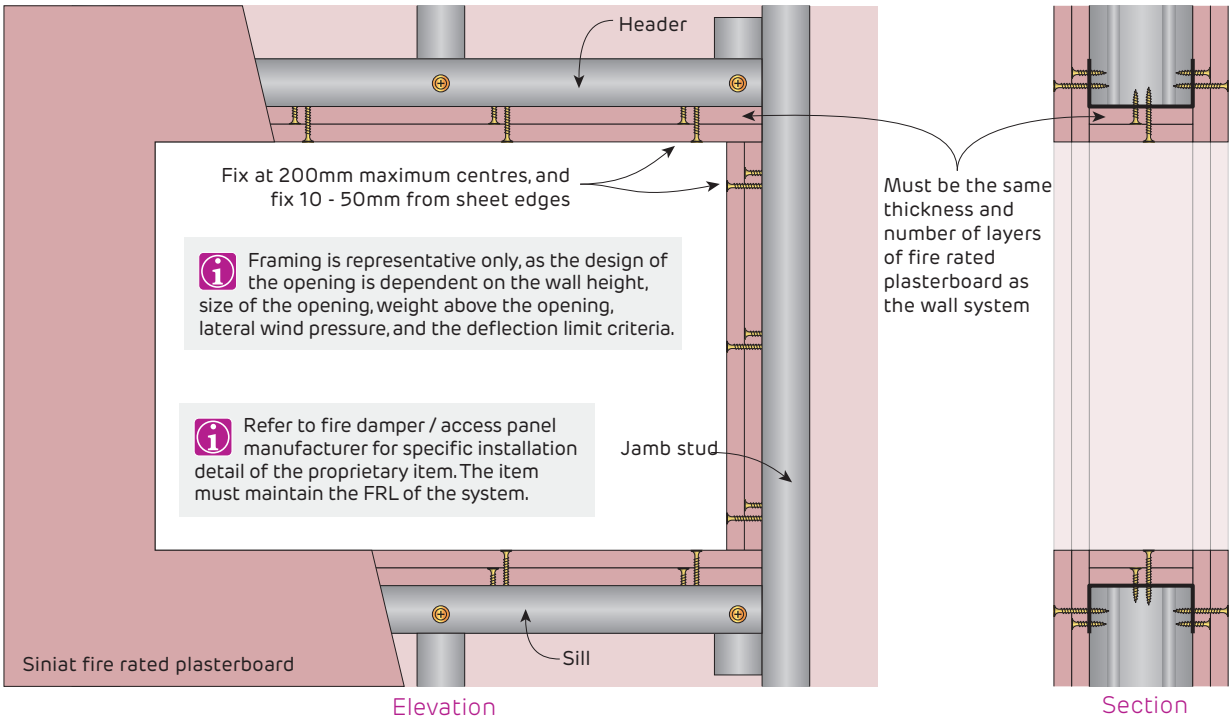

FIGURE 202 Typical Opening Detail for Fire Damper or Access Panel

Fire Rated and Non-Fire Rated
Plumbing Penetration Details for Stud Walls

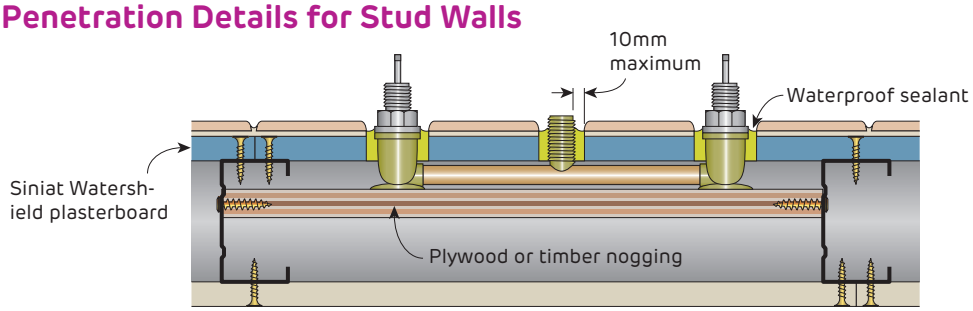

FIGURE 203 Plumbing Penetrations
Plan

Isolate copper and brass fitting from steel framing.

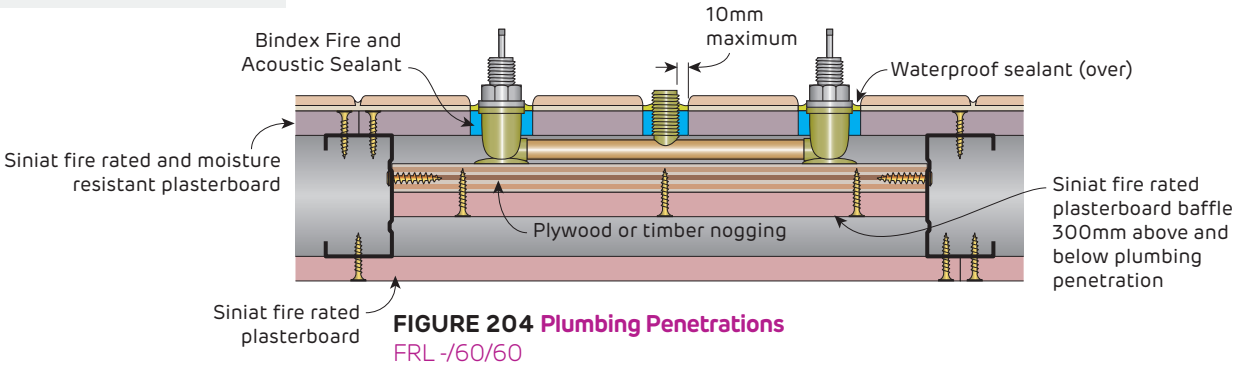

FIGURE 204 Plumbing Penetrations
FRL -/60/60
Fire rated single layer systems - Plan

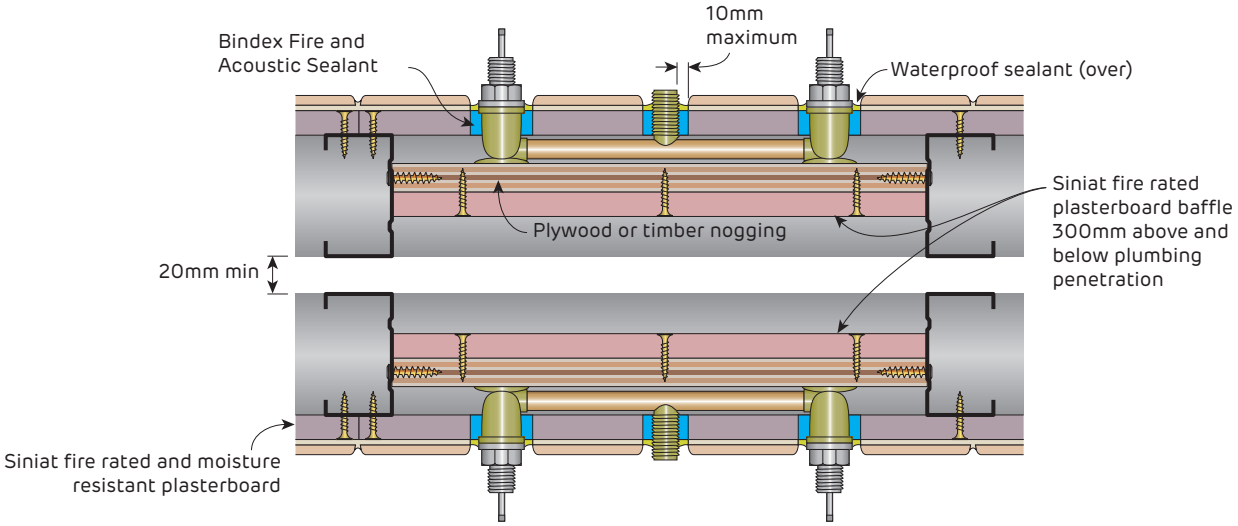

FIGURE 205 Plumbing Penetrations
FRL -/60/60
Fire rated single layer systems - Plan

Fire Rated
Plumbing Penetration Details for Stud Walls

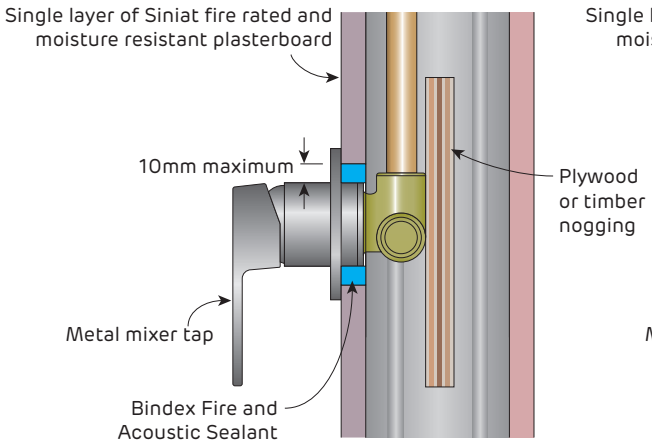

FIGURE 206 Plumbing Penetration
FRL -/60/-
Fire rated single layer systems - Section

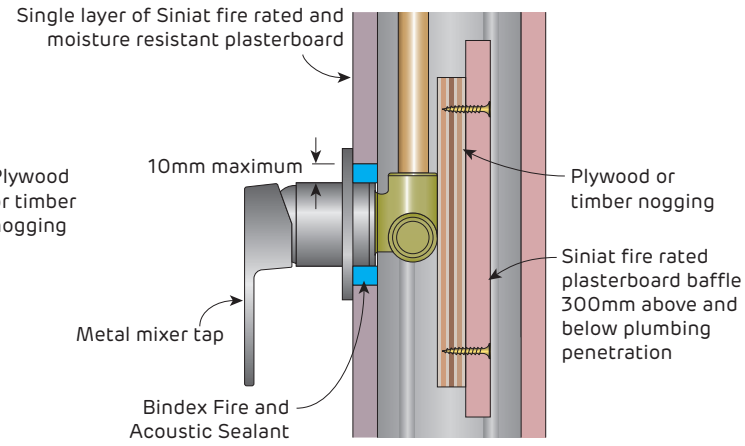

FIGURE 207 Plumbing Penetration
FRL -/60/60
Fire rated single layer systems - Section

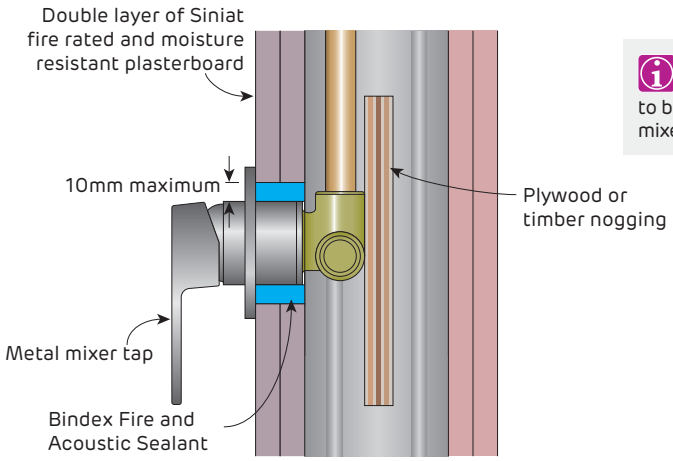

FIGURE 208 Plumbing Penetration
FRL -/120/-
Fire rated double layer systems - Section

Fire rated details on this page only apply to brass, copper, and steel mixer taps and tap sets.

Fire Rated

Flush Patching of Fire Rated Wall Systems - Maximum 300x300mm Opening

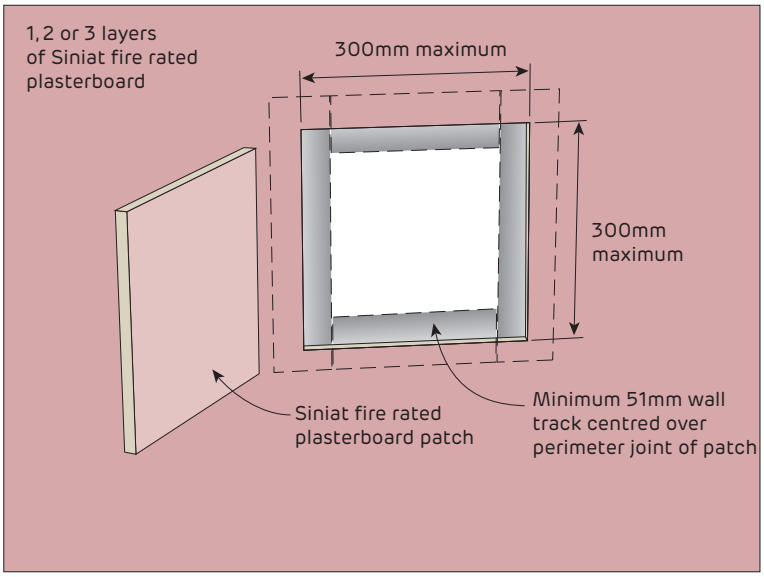

Step 1

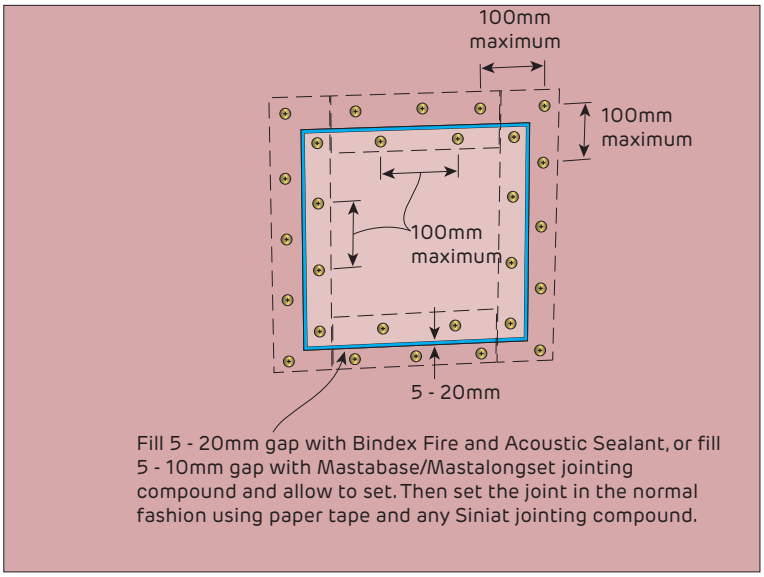

Step 2

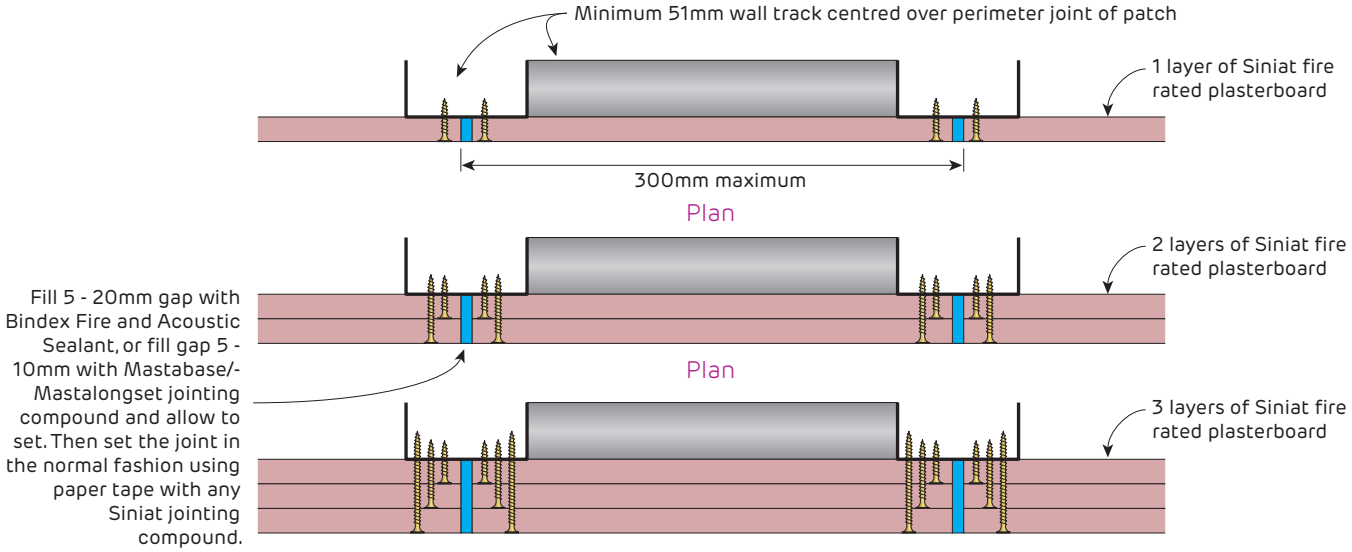

FIGURE 209 Flush patch
Maximum 300x300mm opening
Maintains FRL of system

Fire Rated

Proud Patching of Fire Rated Wall Systems - Maximum 300x300mm Opening

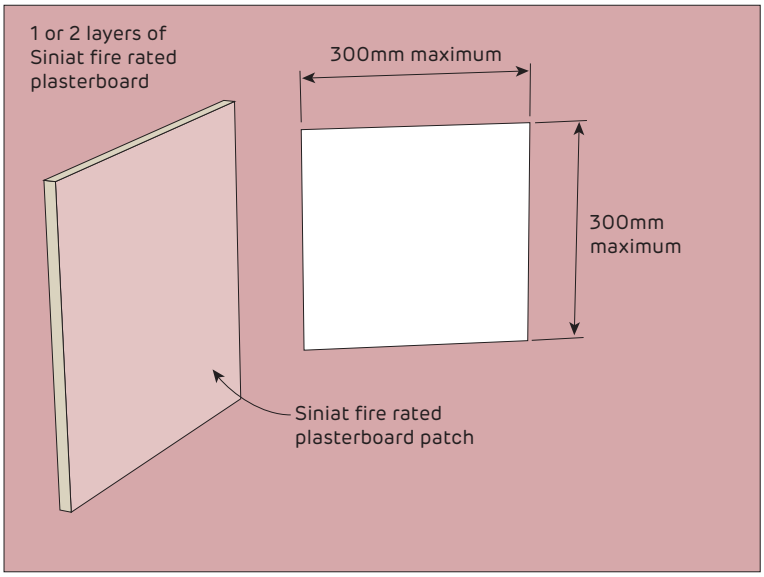

Step 1

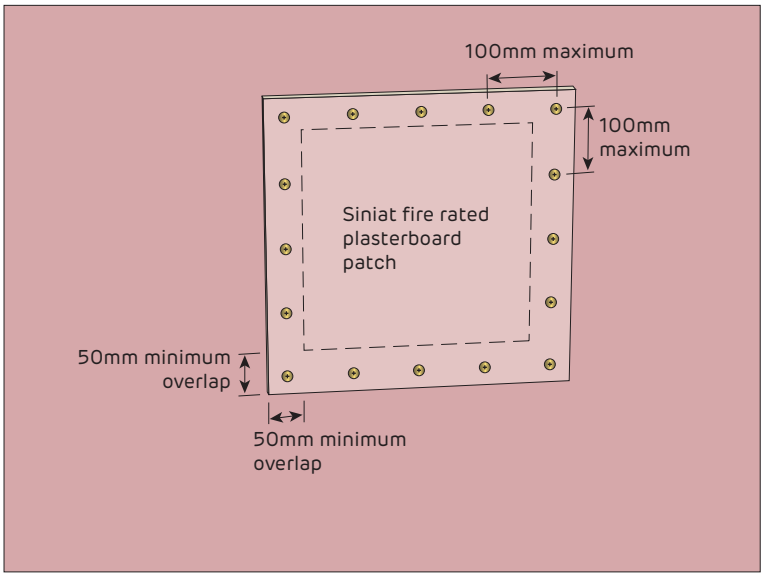

Step 2

Fire rated plasterboard patch must be the same thickness and number of layers as the base fire rated system

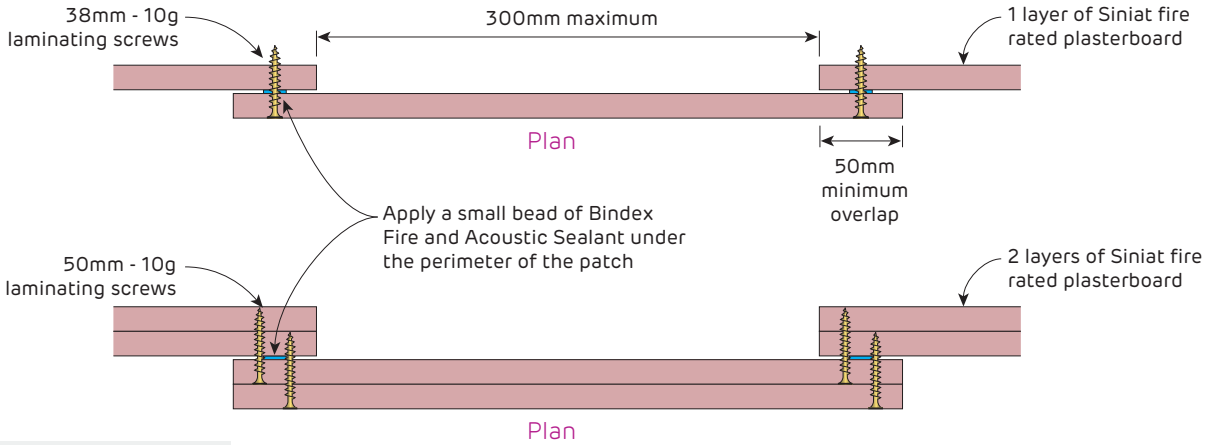

Fill any gaps with Bindex Fire and Acoustic sealant to maintain integrity

FIGURE 210 Proud patch
Maximum 300x300mm opening

Fire Rated

Proud Patching of Fire Rated Wall Systems - Larger Openings

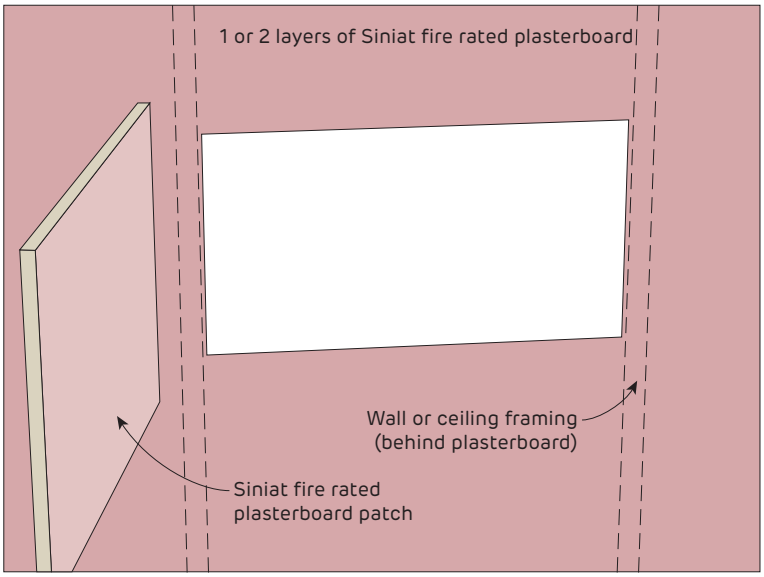

Step 1

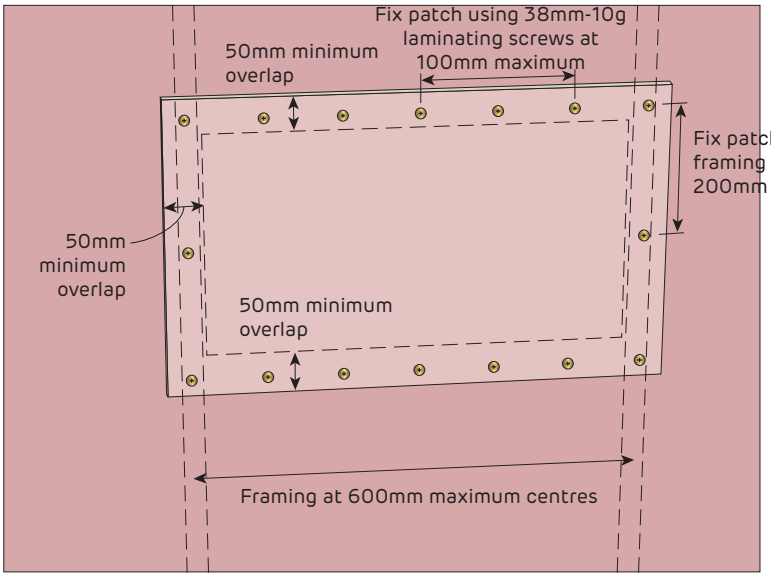

Step 2

To repair a fire rated wall with holes larger than 300mm x 300mm and achieve a flush finish; follow the normal installation instructions to re-instate the system.

Fire rated plasterboard patch must be the same thickness and number of layers as the base fire rated system

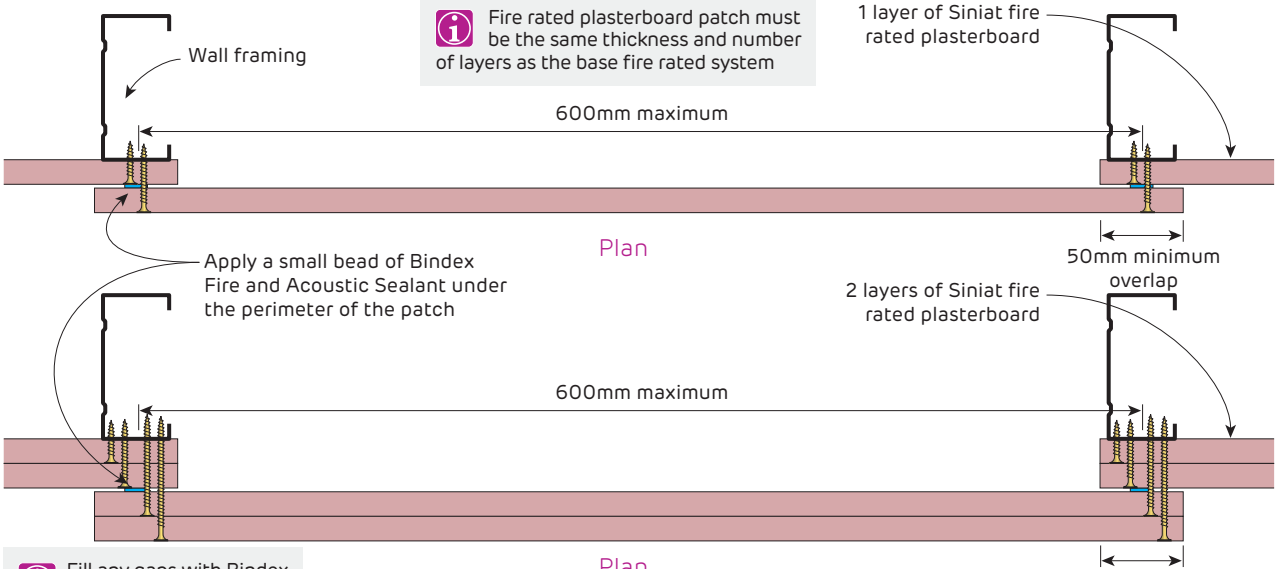

Fill any gaps with Bindex Fire and Acoustic sealant to maintain integrity

FIGURE 211 Proud patch for larger openings
For openings larger than 300x300mm

Fire Rated
Patching of Fire Rated Wall Systems

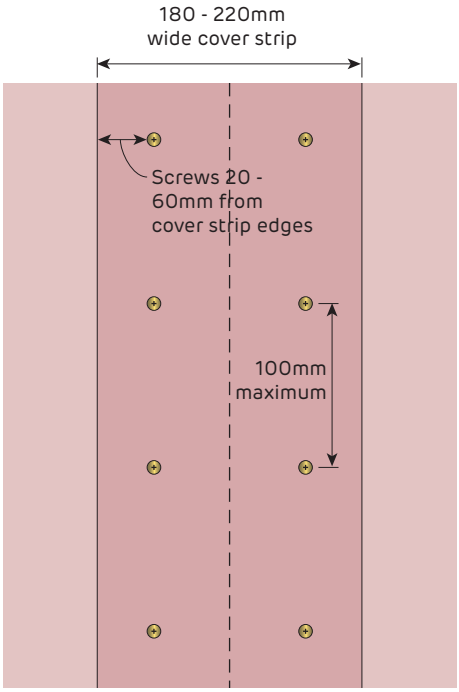

Vertical Joint - Elevation

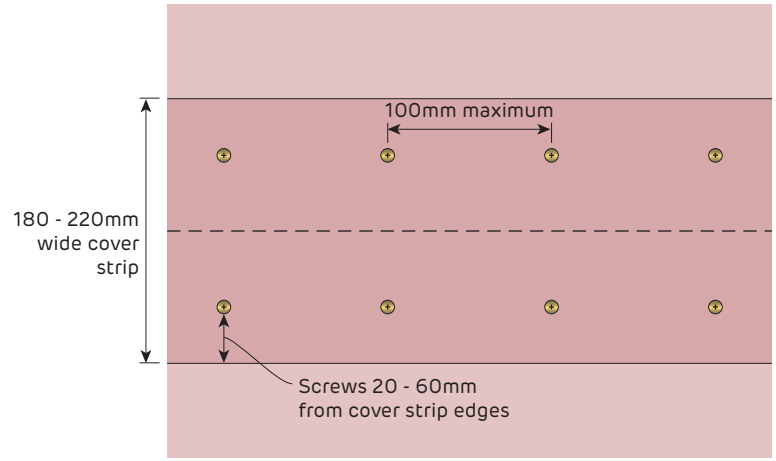

Horizontal Joint - Elevation

Cover strip over a fire rated plasterboard joint can compensate for:
- Joints not staggered in accordance with Siniat Technical Literature
- Use of fibre glass tape
- Incorrect jointing or no jointing material used.

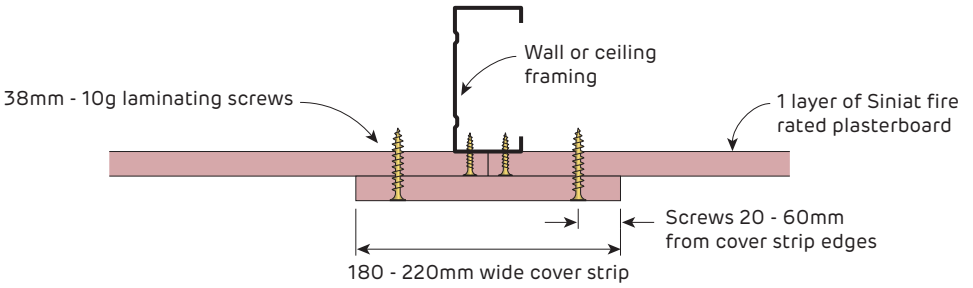

Plan

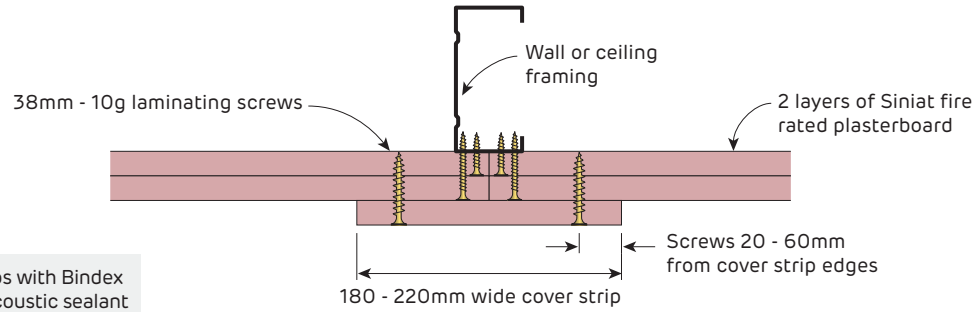

Plan

Fill any gaps with Bindex Fire and Acoustic sealant to maintain integrity

FIGURE 212 Cover Strip

Non-Fire Rated
Light Duty Fixings to Plasterboard

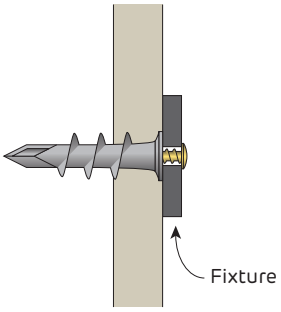

FIGURE 213
Plasterboard Screw
Section

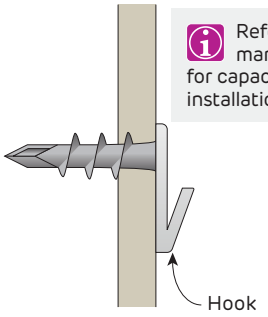

FIGURE 214
Plasterboard Screw
Section

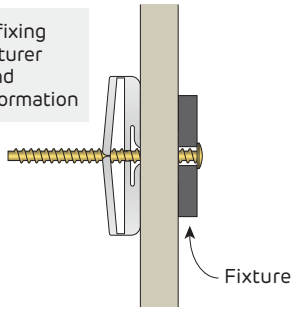

FIGURE 215
Nylon Toggle
Section

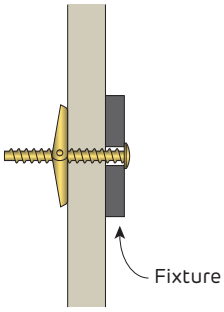

FIGURE 216
Toggle Bolt
Section

Fire Rated or Non-Fire Rated
Light Duty Fixings to Plasterboard

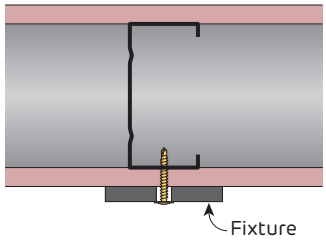

FIGURE 217 Button Head Screw
Suited to 0.5 to 0.75mm BMT framing
Plan

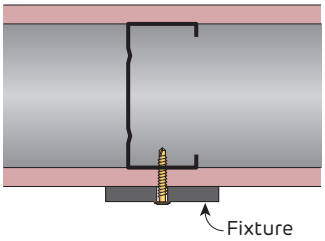

FIGURE 218 Pan Head Screw
Suited to 1.15mm BMT framing
Plan

Medium Duty Fixings to Plasterboard

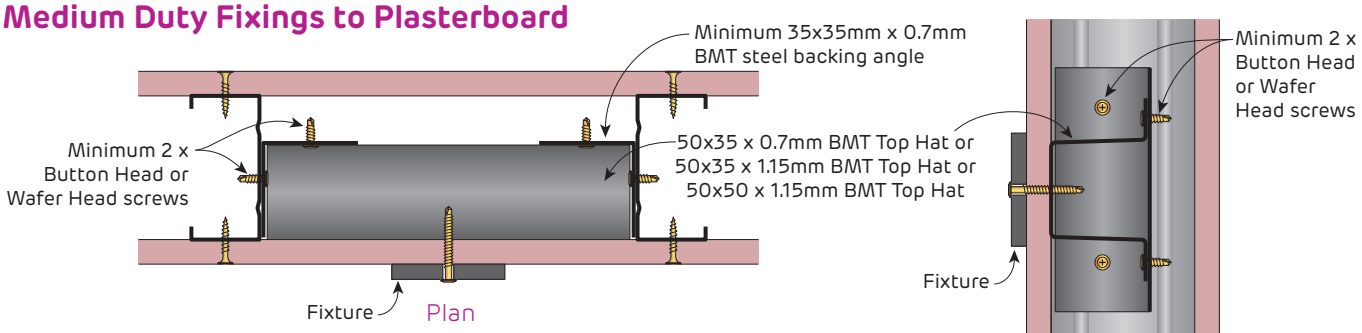

FIGURE 219 Top Hat Nogging

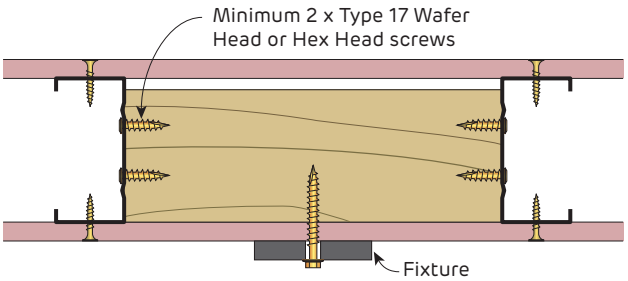

FIGURE 220 Timber Nogging
Plan

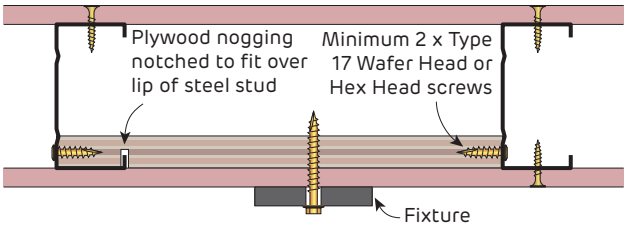

FIGURE 221 Plywood Nogging
Plan

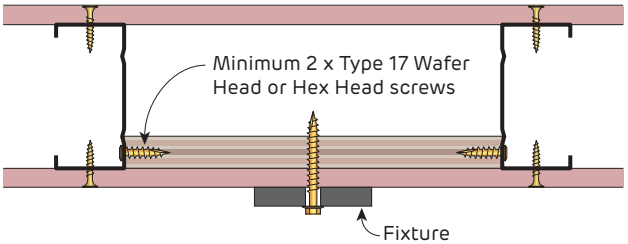

FIGURE 222 Plywood Nogging
Plan

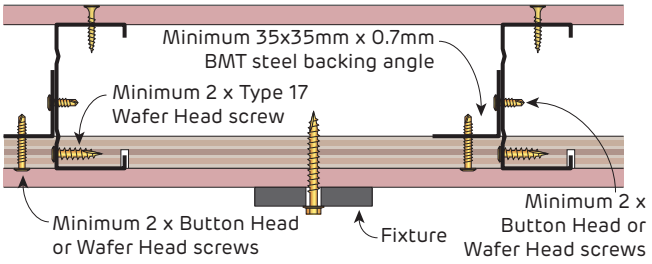

FIGURE 223 Continuous Plywood Nogging
Plan



INSTALLATION 194
COMPONENTS 195
CONSTRUCTION DETAILS 204

3.2 Openings in Internal Steel Framed Walls

Siniat steel stud and track profiles are capable of creating the supporting frame around moderately sized doors and windows in internal steel framed partition walls. Siniat stud and track is often readily available on site, making them a practical way to frame around openings.

This section provides typical details of the framing around door and window openings for internal use. The surrounding frame around an opening requires structural engineering design based upon the dimensions of the opening, applied loads and the steel profiles used.

For large sized door and window openings, and for heavy doors alternative structural framing by others will need to be used.

Fire Rated and Non-Fire Rated
Opening Details for Internal Stud Walls

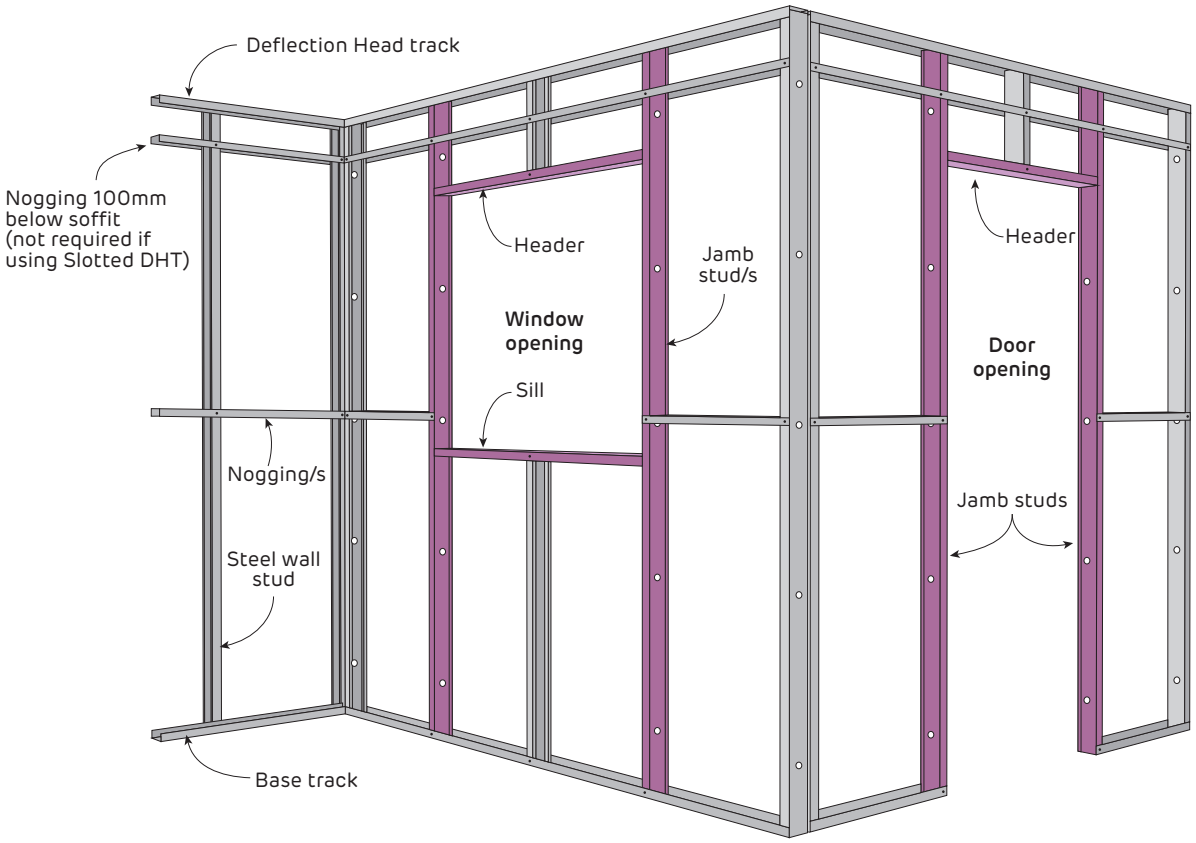

FIGURE 1 Internal Steel Frame Wall with Window and Door Openings



J1 Stud - 1.15mm BMT

J2 Boxed Stud
Typically up to 1200mm opening

J3 Stud + Boxed Stud
Typically up to 2000mm opening

FIGURE 2 Jamb Stud Configurations
Plan

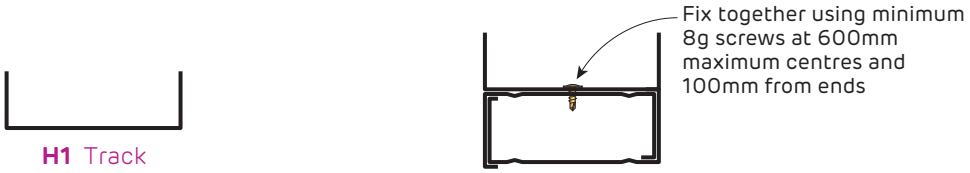

H1 Track
Typically up to 1000mm opening

H2 Track + Boxed Stud
Typically up to 1500mm opening

FIGURE 3 Header Configurations
Section

Typical opening widths based upon 3m high wall, Wu=0.39 kPa, Ws=0.25 with deflection limited to height/240.

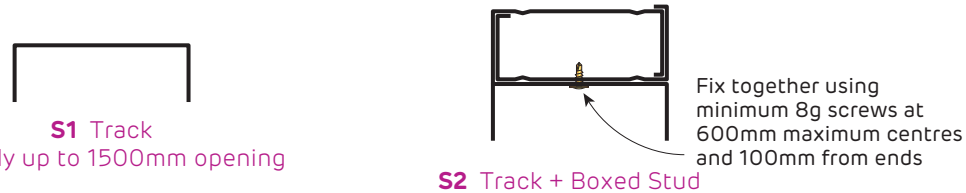

S1 Track
Typically up to 1500mm opening

S2 Track + Boxed Stud
Typically up to 2000mm opening

FIGURE 4 Sill Configurations
Section

Components



FIGURE 5 80mm wide Universal Bracket (UB80)
For 92mm and 150mm studs
Perspective



FIGURE 6 60mm wide Universal Bracket (UB60)
For 64mm and 76mm studs
Perspective

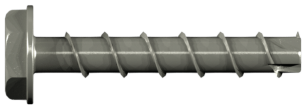

FIGURE 7 Siniat 6 x 45mm Screw Anchor (SA6x45)
Perspective

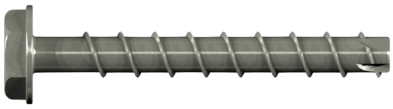

FIGURE 8 Siniat 6 x 60mm Screw Anchor (SA6x60)
Perspective

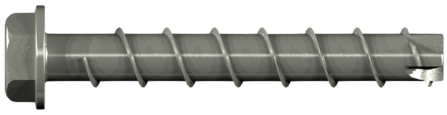

FIGURE 9 Siniat 8 x 65mm Screw Anchor (SA8x65)
Perspective



Refer to Section 1 for available profile sizes

FIGURE 10 Stud
64mm, 76mm, 92mm and 150mm
Profile

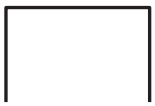

FIGURE 11 Deflection Head Track
64mm, 76mm, 92mm and 150mm
Profile

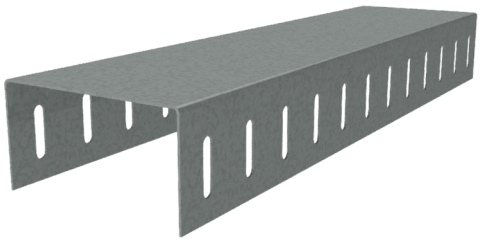

FIGURE 12 Slotted Deflection Head Track
64mm, 76mm, 92mm and 150mm widths
Perspective



FIGURE 13 Base Track
64mm, 76mm, 92mm and 150mm
Profile



FIGURE 14 Backing Angle
50x50 x 1.15mm BMT
Profile

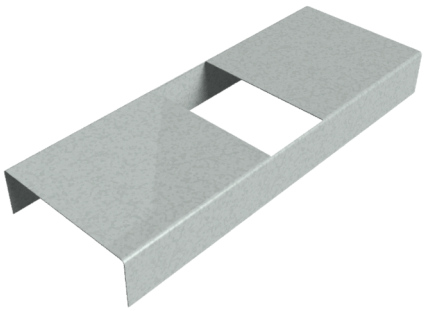

FIGURE 15 Continuous Nogging Track
64mm, 76mm, 92mm and 150mm widths
Perspective

Internal Steel Stud Wall Openings

Typical Head Track Connections for Doors and Windows

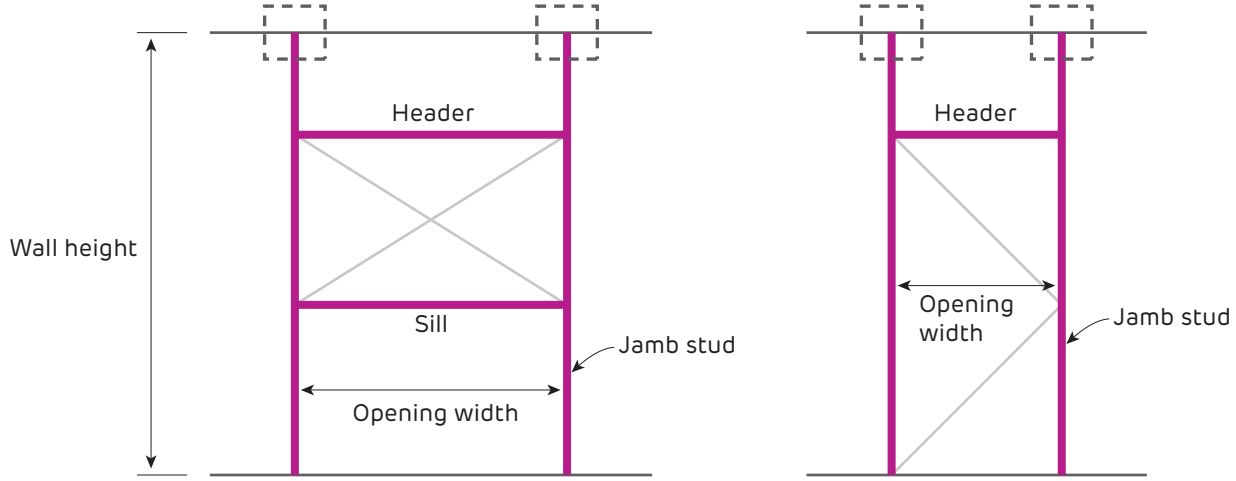

Window opening **Door opening**

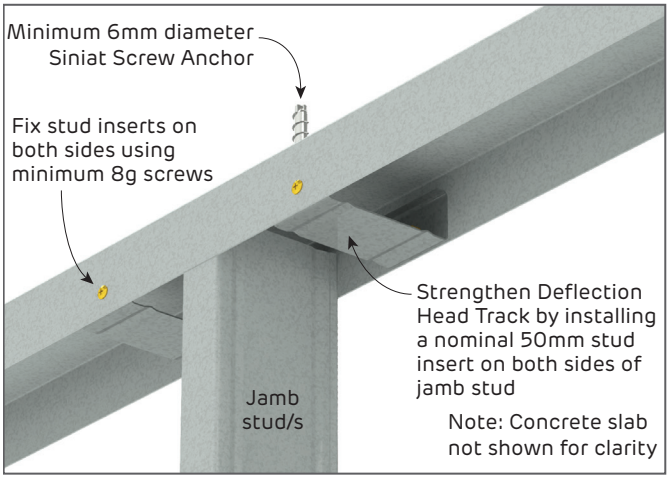

FIGURE 16a Head Track Connection HC5
Medium Duty Connection
Perspective

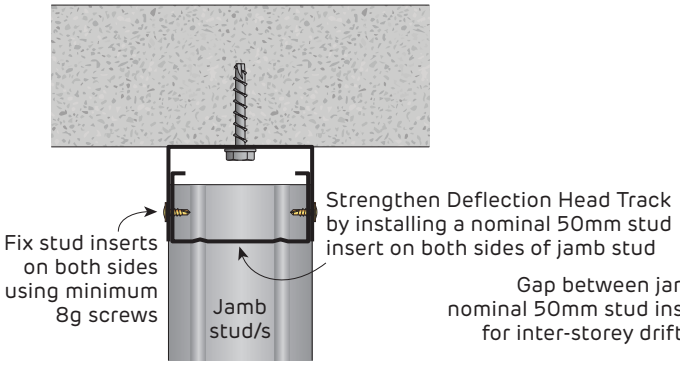

FIGURE 16b Head Track Connection HC5
Section

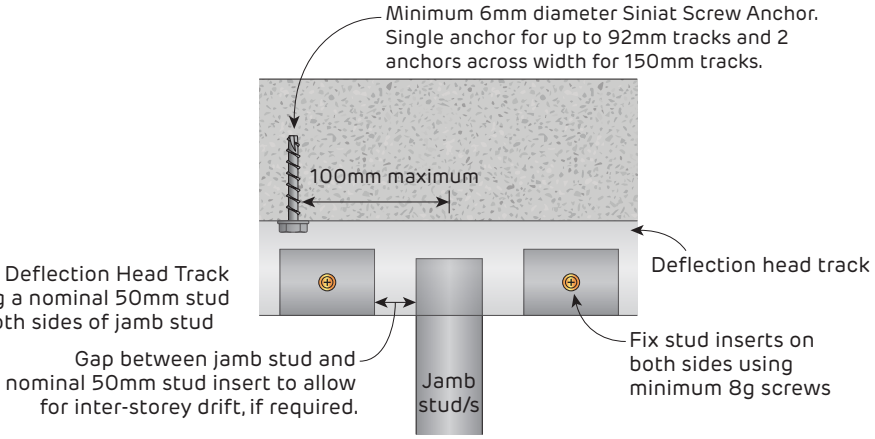

FIGURE 16c Head Track Connection HC5
Elevation

Internal Steel Stud Wall Openings

Typical Head Track Connections for Doors and Windows

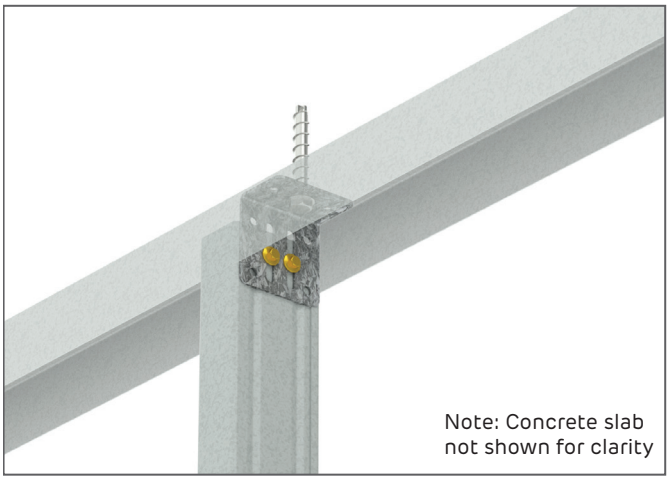

FIGURE 17a Head Track Connection HC3 using UB60
Heavy Duty Connection for 64mm and 76mm studs
Perspective

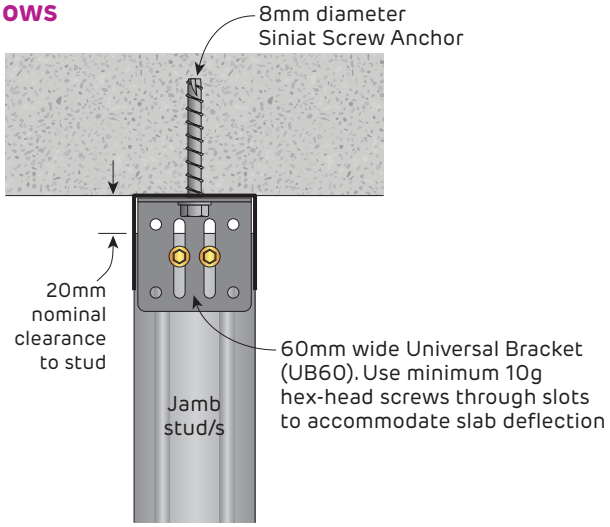

FIGURE 17b Head Track Connection HC3
Heavy Duty Connection for 64mm and 76mm studs
Section

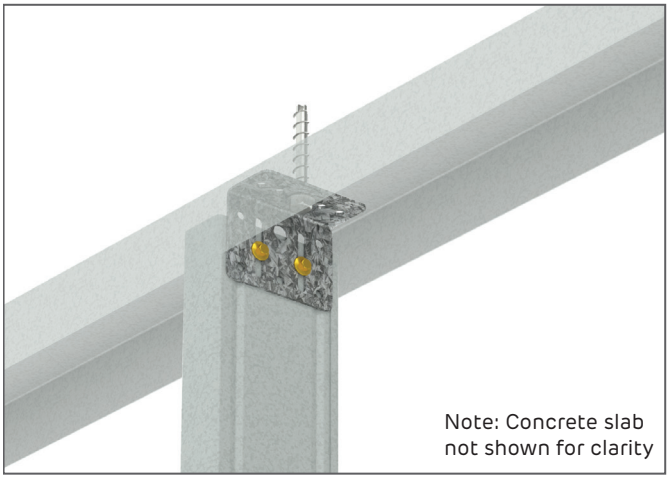

FIGURE 18a Head Track Connection HC3 using UB80
Heavy Duty Connection for 92mm and 150mm studs
Perspective

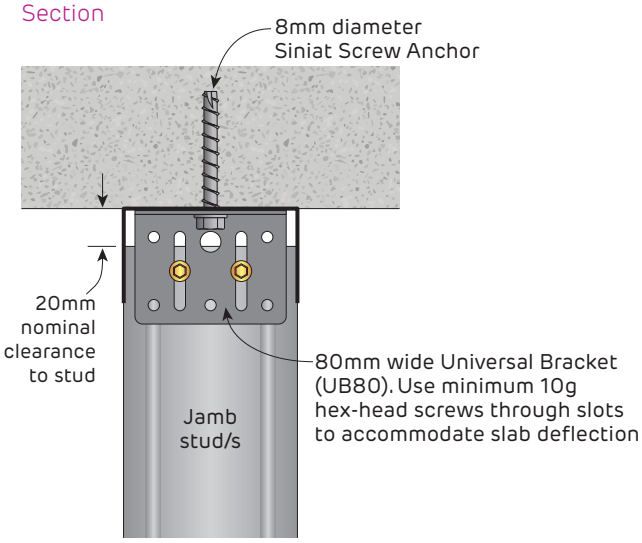

FIGURE 18b Head Track Connection HC3
Heavy Duty Connection for 64mm and 76mm studs
Section

Internal Steel Stud Wall Openings
Typical Base Track Connections for Doors and Windows

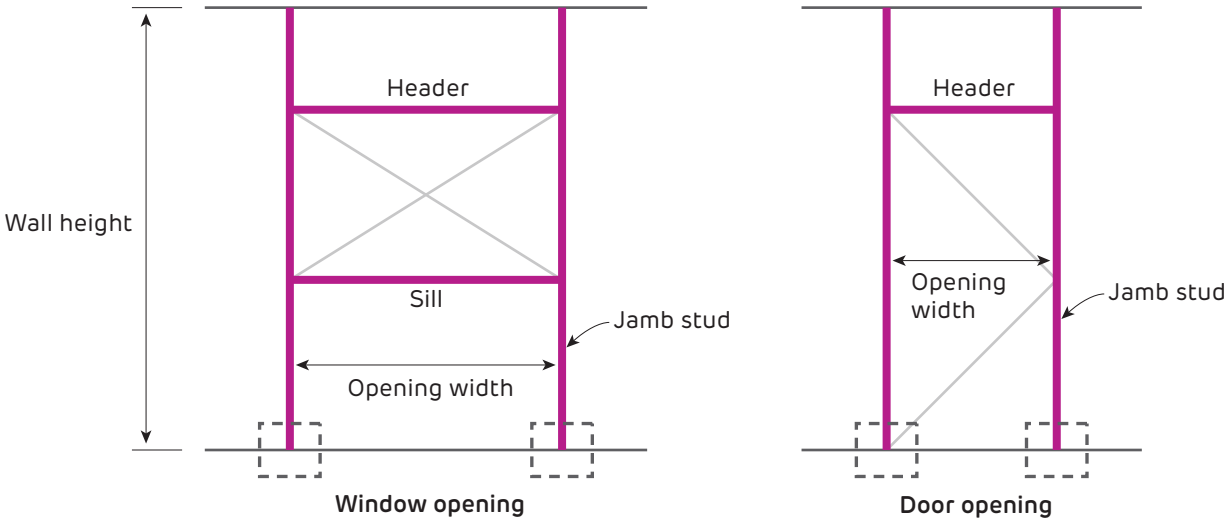

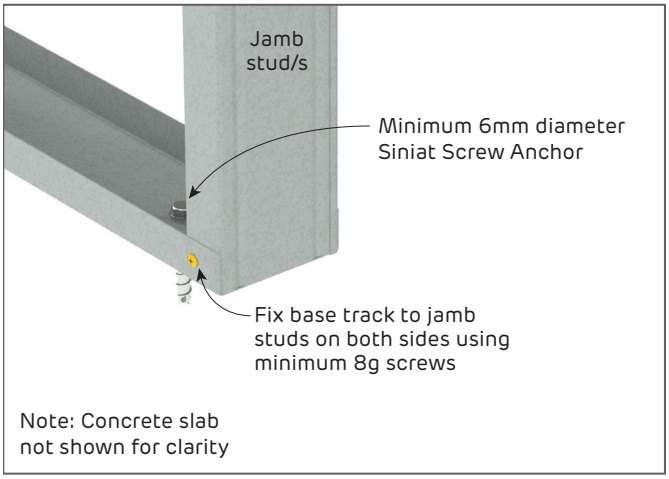

FIGURE 19a Base Track Connection BC2 - Doorway
Perspective

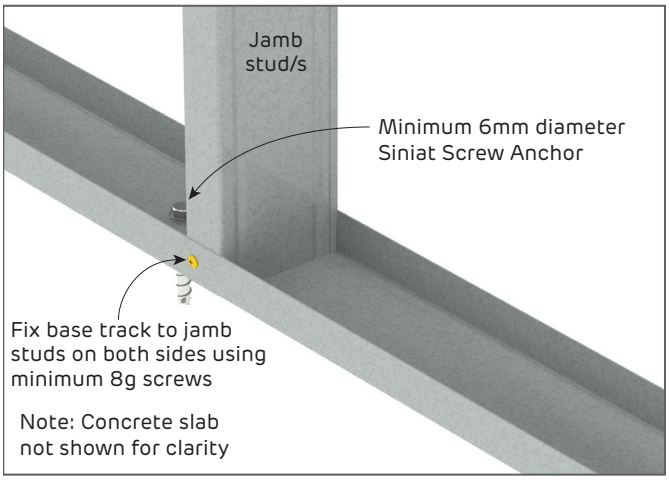

FIGURE 20a Base Track Connection BC2 - Window
Perspective

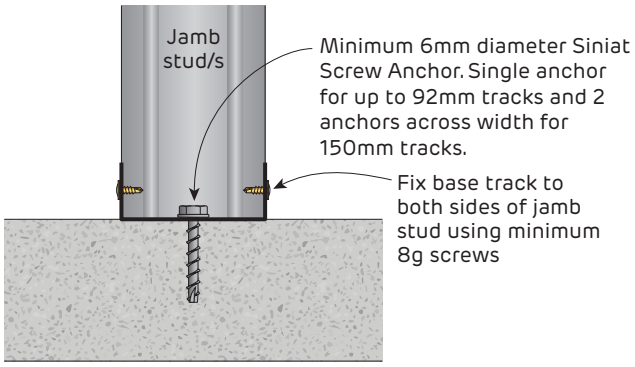

FIGURE 19b Base Track Connection BC2
Section

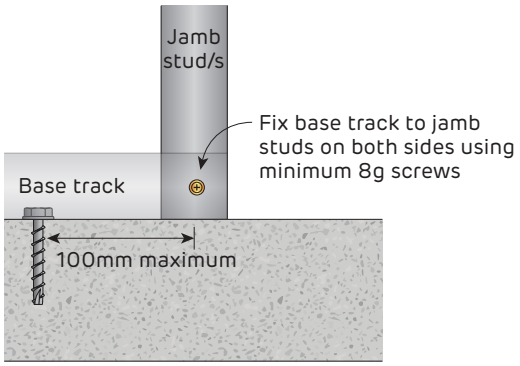

FIGURE 19c Base Track Connection BC2 for Door Opening
Elevation

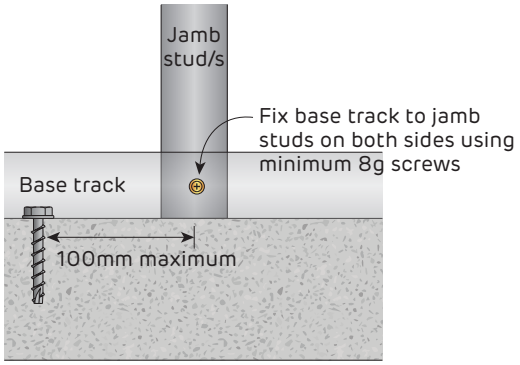

FIGURE 20b Base Connection BC2 for Window Opening
Elevation

Internal Steel Stud Wall Openings

Typical Base Track Connections for Doors and Windows

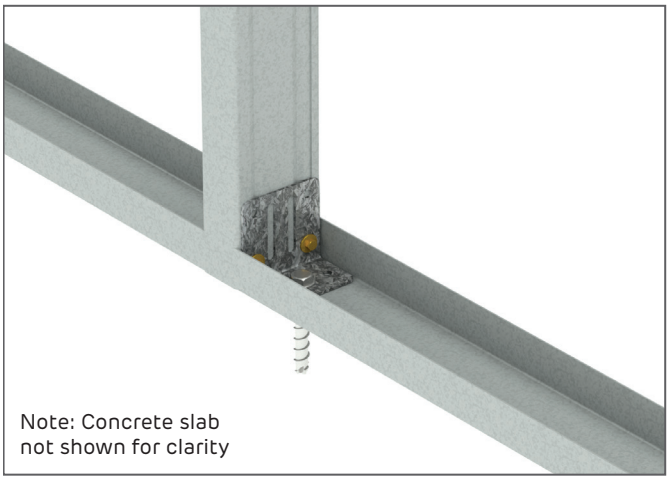

FIGURE 21a Base Track Connection BC3 using UB60
Heavy Duty Connection for 64mm and 76mm studs
Perspective

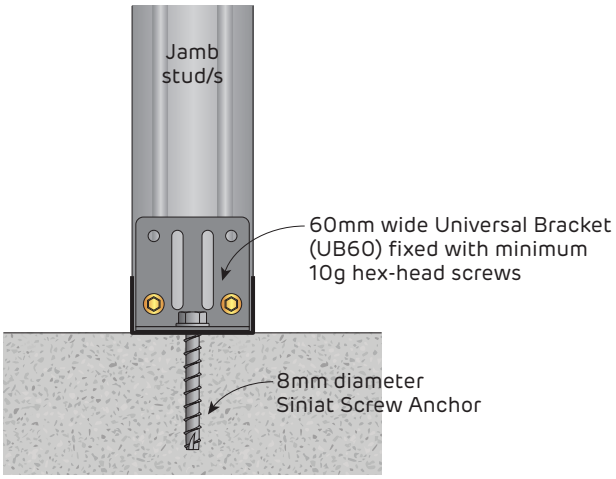

FIGURE 21b BaseTrack Connection BC3
Heavy Duty Connection for 64mm and 76mm studs
Section

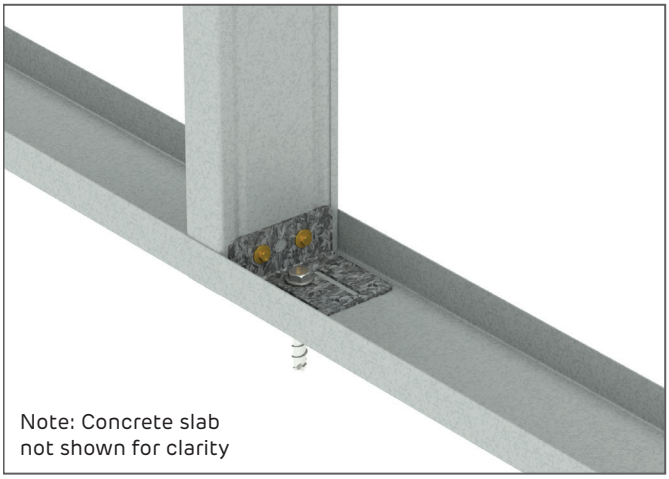

FIGURE 22a Base Track Connection BC3 using UB80
Heavy Duty Connection for 92mm and 150mm studs
Perspective

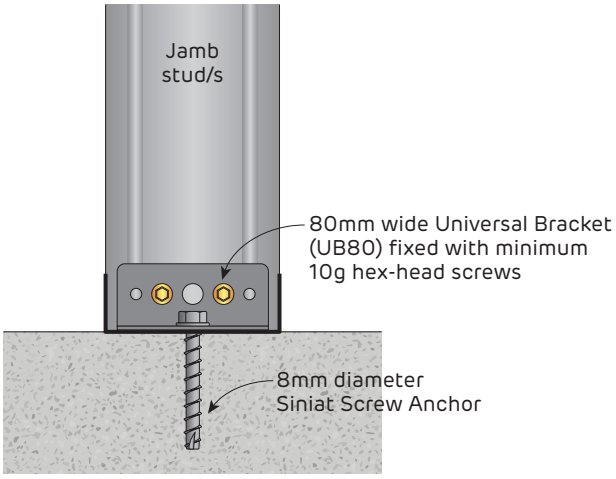

FIGURE 22b Base Track Connection HC3
Heavy Duty Connection for 64mm and 76mm studs
Section

Internal Steel Stud Wall Openings

Typical Header Connections for Doors and Windows

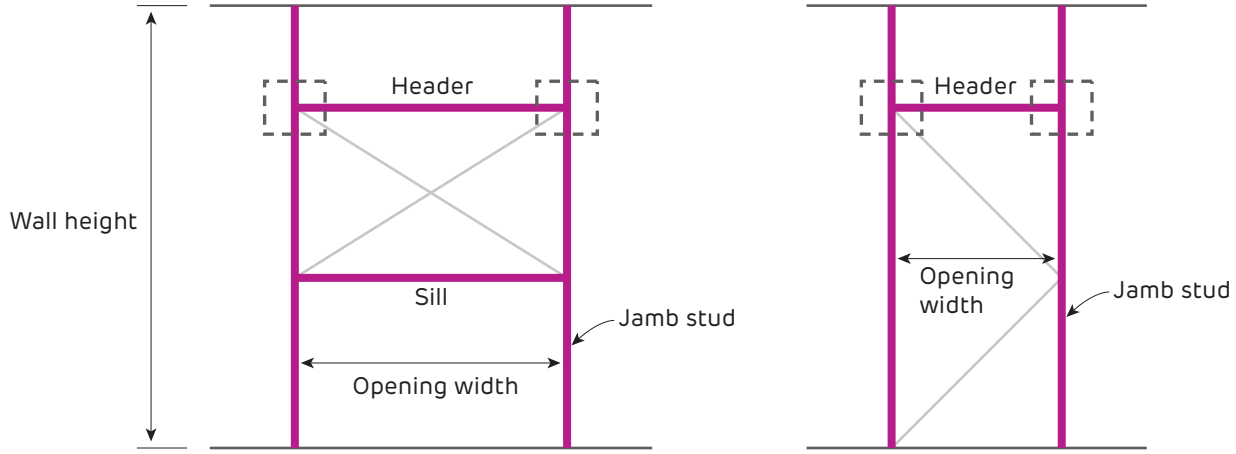

Window opening **Door opening**

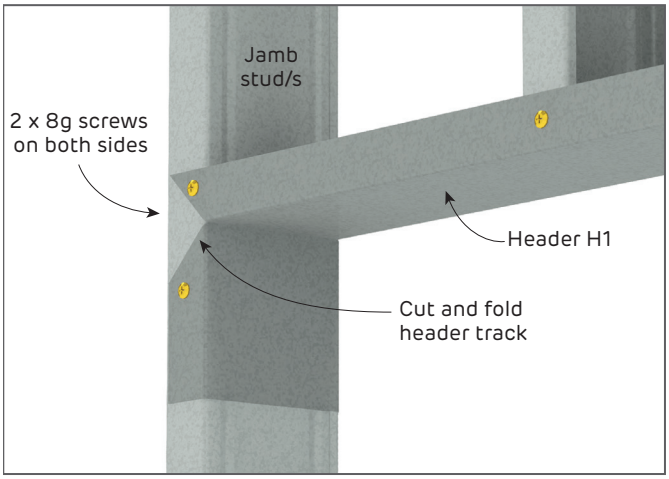

FIGURE 23a Header H1 Connection
Perspective

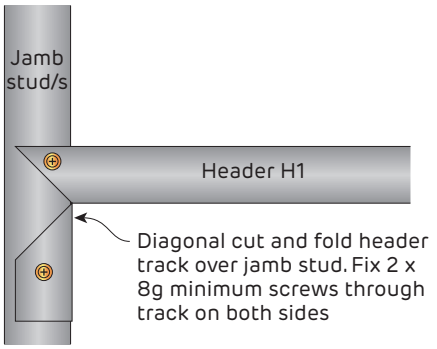

FIGURE 23b Header H1 Connection
Elevation

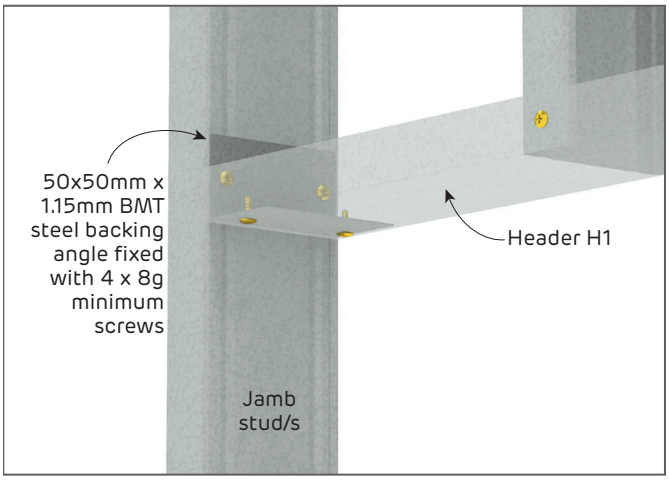

FIGURE 24a Alternative Header H1 Connection
Perspective

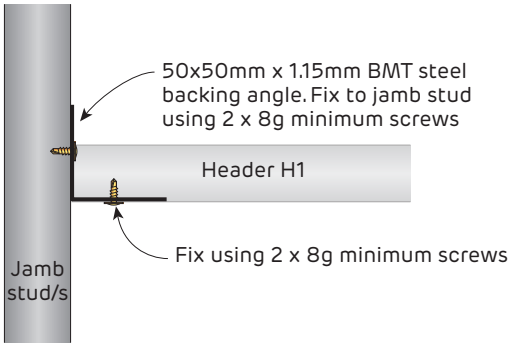

FIGURE 24b Alternative Header H1 Connection
Elevation

Internal Steel Stud Wall Openings

Typical Header Connections for Doors and Windows

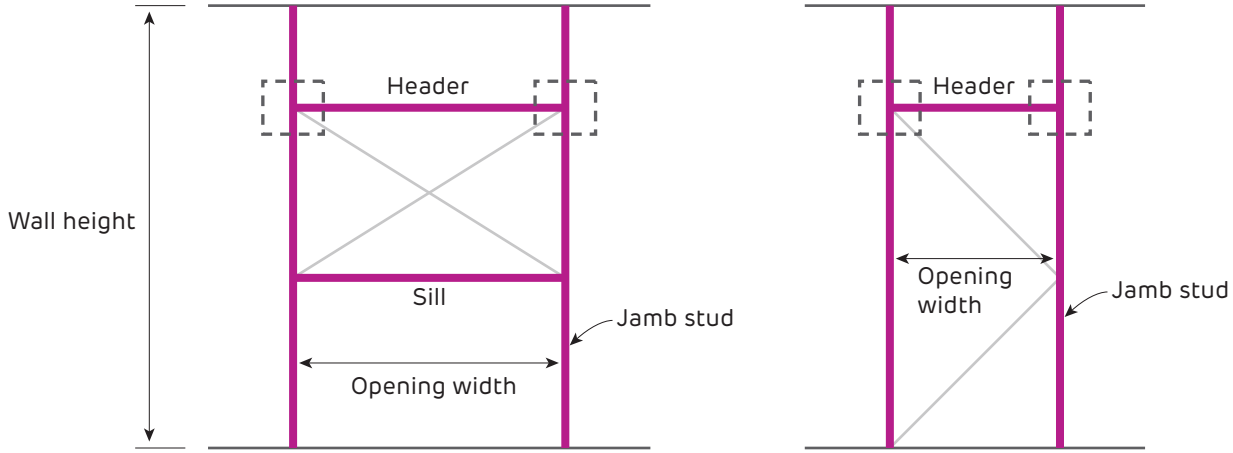

Window opening **Door opening**

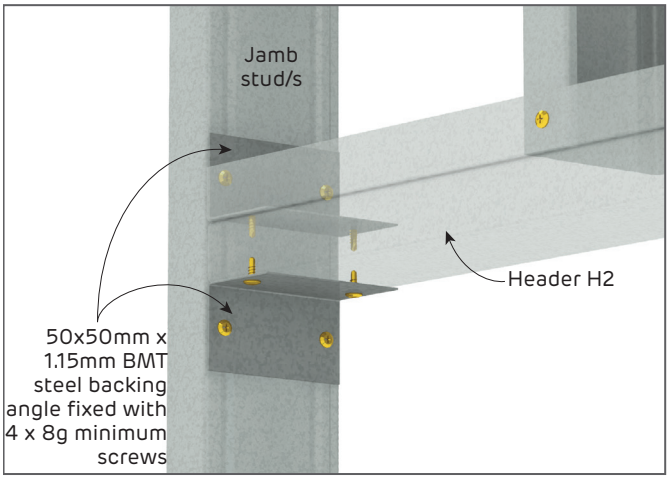

FIGURE 25a Header H2 Connection
Perspective

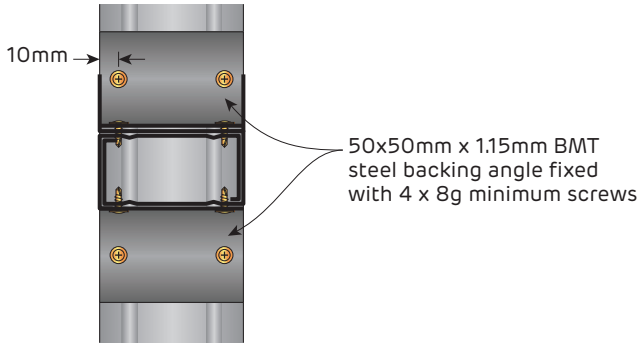

FIGURE 25b Header H2 Connection
Section

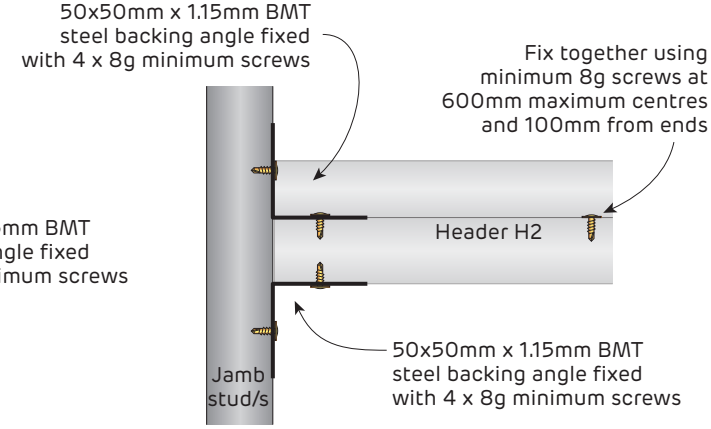

FIGURE 25c Header H2 Connection
Elevation

Internal Steel Stud Wall Openings
Typical Sill Connections for Windows

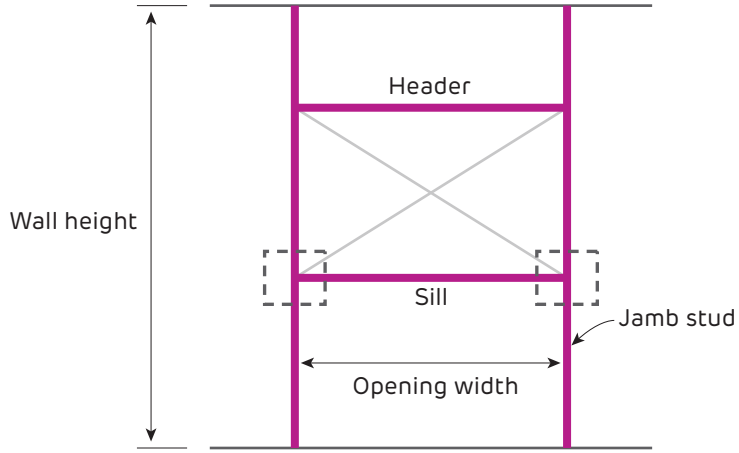

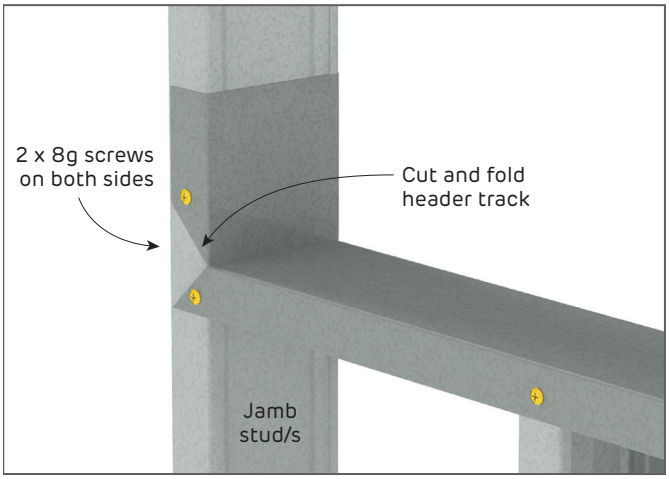

FIGURE 26a Sill S1 Connection
Perspective

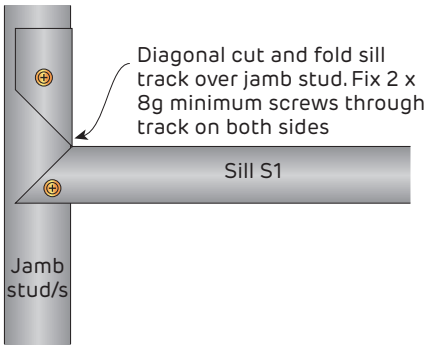

FIGURE 26b Sill S1 Connection
Elevation

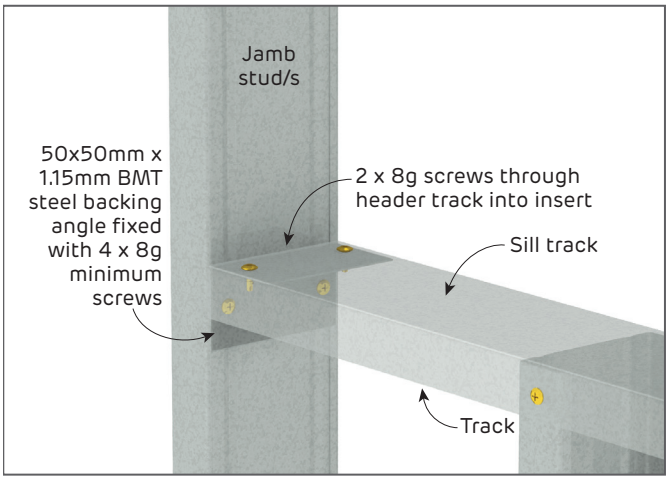

FIGURE 27a Alternative Sill S1 Connection
Perspective

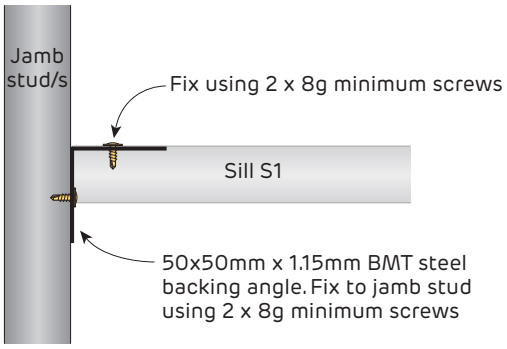

FIGURE 27b Alternative Sill S1 Connection
Elevation

Internal Steel Stud Wall Openings
Typical Sill Connections for Windows

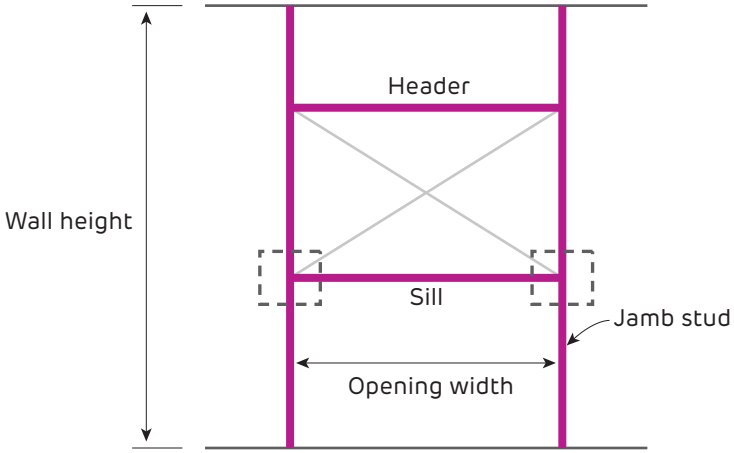

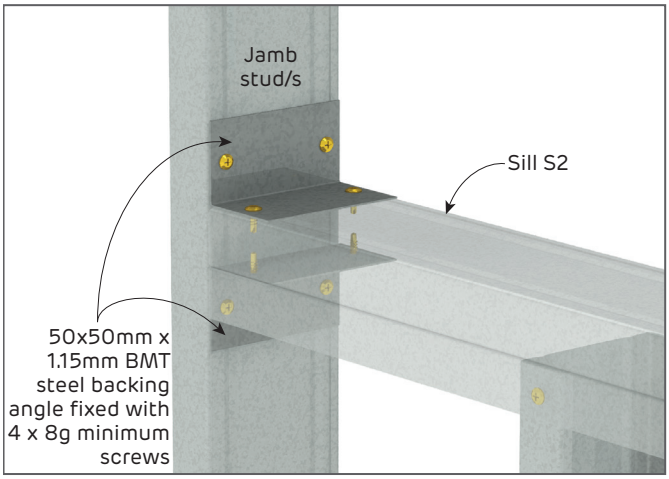

FIGURE 28a Sill S2 Connection
Perspective

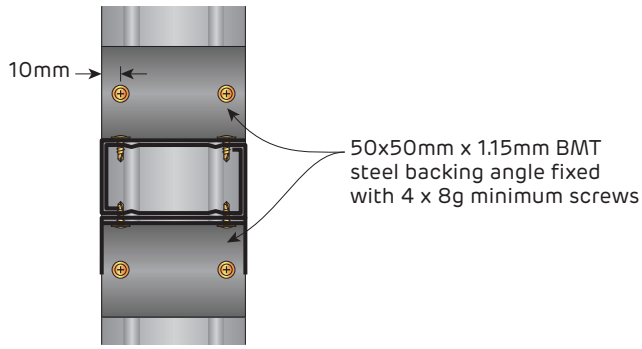

FIGURE 28b Sill S2 Connection
Section

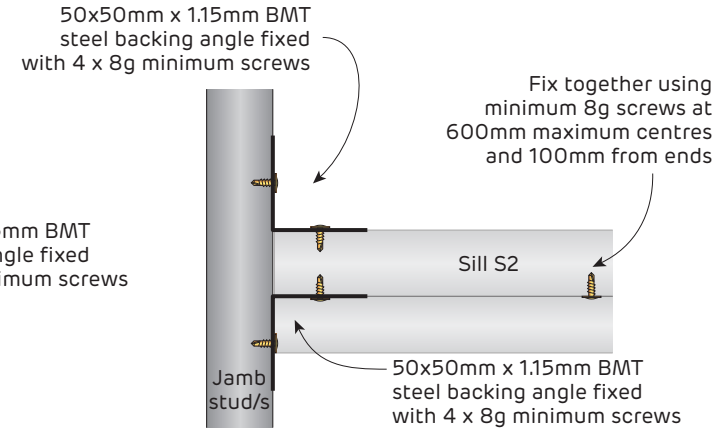

FIGURE 28c Sill S2 Connection
Elevation

Fire Rated and Non-Fire Rated
Door Opening Details for Internal Stud Walls

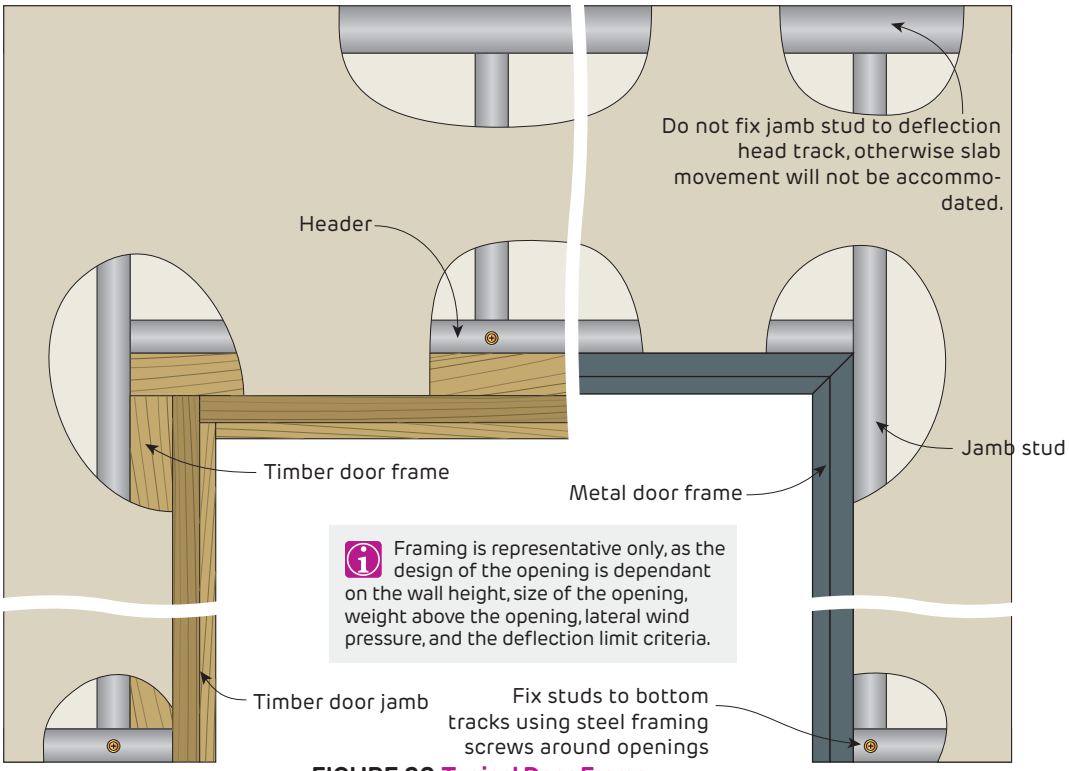

FIGURE 29 Typical Door Frame
Elevation

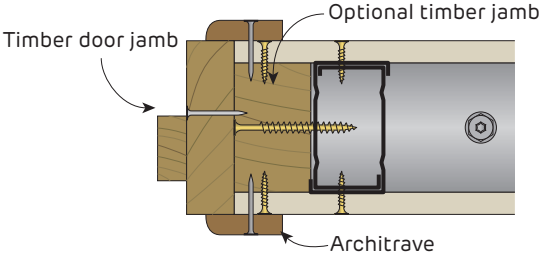

FIGURE 30 Typical Timber Door Jamb
Plan

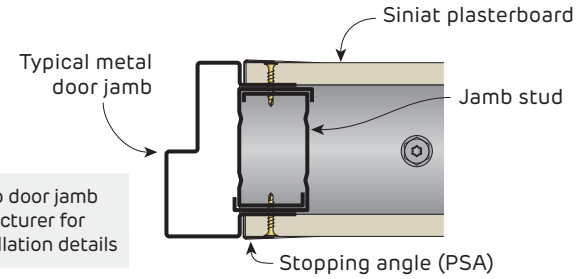

FIGURE 31 Typical Metal Door Jamb
Plan

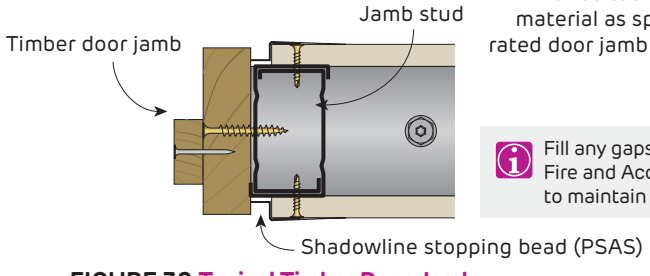

FIGURE 32 Typical Timber Door Jamb
With shadowline stopping bead
Plan

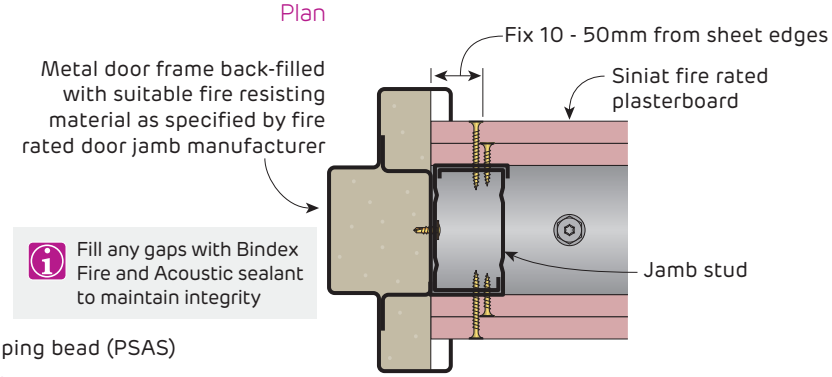

FIGURE 33 Typical Fire Rated Door Jamb
Example only
Plan

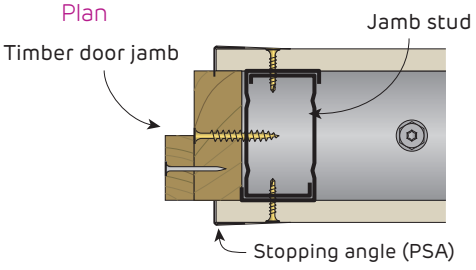

FIGURE 34 Typical Timber Door Jamb
With stopping angle
Plan

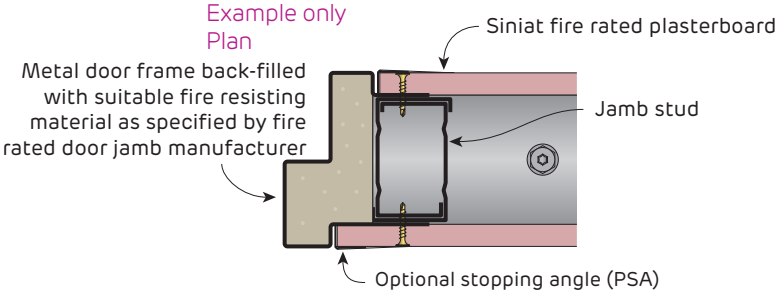

FIGURE 35 Typical Fire Rated Door Jamb
Example only
Plan



SYSTEMS	**206**
SYSTEM DIRECTORY	206
INSTALLATION	**229**
GENERAL REQUIREMENTS	229
FRAMING	230
PLASTERBOARD LAYOUT	232
PLASTERBOARD FIXING	233
CONSTRUCTION DETAILS	**243**

3.3 Internal Timber Framed Walls

Internal timber walls are a common form of construction for low rise residential and commercial buildings. Applications range from standard residential walls to home theatres and inter-tenancy separation.

This section contains systems, installation instructions and construction details for general and fire rated internal timber walls.

[For separating wall construction details, refer to Section 3.8]

[For Siniat Interhome systems and installation, refer to the latest Interhome manual on the website]

System Directory



Non-fire Rated Internal Timber Framed Walls

System	Side 1	Side 2	Frame	FRL	Acoustics[1]	
					Rw	Rw+Ctr
TSW10	1 x 10mm **masta**shield	1 x 10mm **masta**shield	Stud	-	37	28
TSW11	1 x 10mm **masta**shield	2 x 10mm **masta**shield	Stud	-	41	33
TSW12	2 x 10mm **masta**shield	2 x 10mm **masta**shield	Stud	-	44	36
TSW210	1 x 10mm **sound**shield	1 x 10mm **sound**shield	Stud	-	42	31
TSW211	1 x 10mm **sound**shield	2 x 10mm **sound**shield	Stud	-	44	37
TSW212	2 x 10mm **sound**shield	2 x 10mm **sound**shield	Stud	-	46	39
TSW250	1 x 10mm **sound**shield	1 x 10mm **sound**shield	Stud + Resilient Mounts	-	46	35
TSW251	1 x 10mm **sound**shield	2 x 10mm **sound**shield	Stud + Resilient Mounts	-	51	41
TSW15	1 x 13mm **masta**shield	1 x 13mm **masta**shield	Stud	-	39	30
TSW16	1 x 13mm **masta**shield	2 x 13mm **masta**shield	Stud	-	43	34
TSW17	2 x 13mm **masta**shield	2 x 13mm **masta**shield	Stud	-	45	39
TSW215	1 x 13mm **sound**shield	1 x 13mm **sound**shield	Stud	-	41	33
TSW216	1 x 13mm **sound**shield	2 x 13mm **sound**shield	Stud	-	44	39
TSW217	2 x 13mm **sound**shield	2 x 13mm **sound**shield	Stud	-	47	42
TSW255	1 x 13mm **sound**shield	1 x 13mm **sound**shield	Stud + Resilient Mounts	-	49	41
TSW256	1 x 13mm **sound**shield	2 x 13mm **sound**shield	Stud + Resilient Mounts	-	54	46
TSW20	1 x 10mm **masta**shield	1 x 10mm **masta**shield	Staggered stud	-	41	33
TSW21	1 x 10mm **masta**shield	2 x 10mm **masta**shield	Staggered stud	-	45	36
TSW22	2 x 10mm **masta**shield	2 x 10mm **masta**shield	Staggered stud	-	50	41
TSW220	1 x 10mm **sound**shield	1 x 10mm **sound**shield	Staggered stud	-	43	34
TSW221	1 x 10mm **sound**shield	2 x 10mm **sound**shield	Staggered stud	-	48	40
TSW222	2 x 10mm **sound**shield	2 x 10mm **sound**shield	Staggered stud	-	52	46
TSW25	1 x 13mm **masta**shield	1 x 13mm **masta**shield	Staggered stud	-	43	37
TSW26	1 x 13mm **masta**shield	2 x 13mm **masta**shield	Staggered stud	-	48	40
TSW27	2 x 13mm **masta**shield	2 x 13mm **masta**shield	Staggered stud	-	52	45
TSW225	1 x 13mm **sound**shield	1 x 13mm **sound**shield	Staggered stud	-	47	40
TSW226	1 x 13mm **sound**shield	2 x 13mm **sound**shield	Staggered stud	-	51	45
TSW227	2 x 13mm **sound**shield	2 x 13mm **sound**shield	Staggered stud	-	54	50

1. Acoustic values determined using 70mm timber stud and R1.5 glasswool insulation.

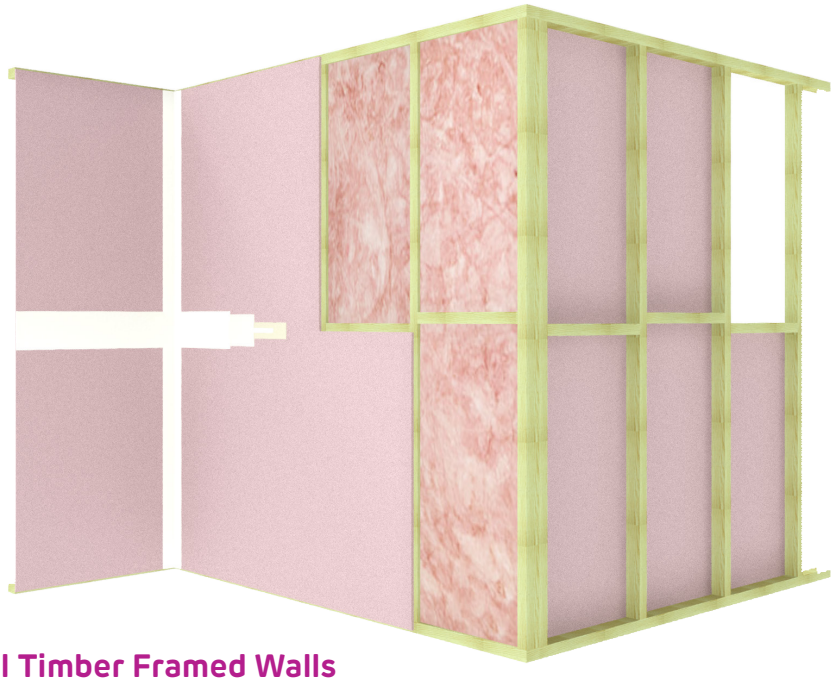

Fire Rated Internal Timber Framed Walls

System	Side 1	Side 2	Frame	FRL		Acoustics[1]	
						Rw	Rw+Ctr
TSW301	2 x 13mm fireshield	-	Stud	-/30/30	30/30/30	34	31
TSW302	3 x 13mm fireshield	-	Stud	-/90/90	90/90/90	37	35
TSW310	1 x 13mm fireshield	1 x 13mm fireshield	Stud	-/60/60	30/30/30	41	32
TSW311	1 x 13mm fireshield	2 x 13mm fireshield	Stud	-/90/90	30/30/30	44	37
TSW312	2 x 13mm fireshield	2 x 13mm fireshield	Stud	-/120/120	90/90/90	47	41
TSW314	3 x 13mm fireshield	3 x 13mm fireshield	Stud	-/180/180	120/120/120	51	45
TSW350	1 x 13mm fireshield	Resilient Mount and 1 x 13mm fireshield	Stud	-/60/60	30/30/30	47	36
TSW352	2 x 13mm fireshield	Resilient Mount and 2 x 13mm fireshield	Stud	-/120/120	90/90/90	56	47
TSW510	1 x 13mm fireshield	1 x 13mm fireshield + 1 x 6mm Villaboard™	Stud	-/60/60	30/30/30	44	37
TSW512	1 x 13mm fireshield + 1 x 6mm Villaboard™	1 x 13mm fireshield + 1 x 6mm Villaboard™	Stud	-/90/90	60/60/60	47	41
TSW304	2 x 16mm fireshield	-	Stud	-/60/60	60/60/60	35	32
TSW305	3 x 16mm fireshield	-	Stud	-/120/120	120/120/120	38	36
TSW315	1 x 16mm fireshield	1 x 16mm fireshield	Stud	-/90/90	60/60/60	41	33
TSW316	1 x 16mm fireshield	2 x 16mm fireshield	Stud	-/120/120	60/60/60	44	39
TSW317	2 x 16mm fireshield	2 x 16mm fireshield	Stud	-/120/120	120/120/120	47	42
TSW319	3 x 16mm fireshield	3 x 16mm fireshield	Stud	-/240/240	120/120/120	51	46
TSW355	1 x 16mm fireshield	Resilient Mount and 1 x 16mm fireshield	Stud	-/90/90	60/60/60	50	41
TSW357	2 x 16mm fireshield	Resilient Mount and 2 x 16mm fireshield	Stud	-/120/120	120/120/120	57	49
TSW514	1 x 16mm fireshield	1 x 16mm fireshield + 1 x 6mm Villaboard™	Stud	-/90/90	60/60/60	44	38
TSW516	1 x 16mm fireshield + 1 x 6mm Villaboard™	1 x 16mm fireshield + 1 x 6mm Villaboard™	Stud	-/120/120	60/60/60	47	42

1. Acoustic values determined using 70mm timber stud and R1.5 glasswool insulation.

Fire Rated Internal Timber Framed Walls

System	Side 1	Side 2	Frame[1,2]	FRL		Acoustics[1,2]	
						Rw	Rw+Ctr
TSW330	1 x 13mm fireshield	1 x 13mm fireshield	Double stud	-/60/60	30/30/30	52	42
TSW331	1 x 13mm fireshield	2 x 13mm fireshield	Double stud	-/90/90	30/30/30	57	**50***
TSW332	2 x 13mm fireshield	2 x 13mm fireshield	Double stud	-/120/120	90/90/90	62	**54**
TSW380	1 x 13mm fireshield + 1 x 10mm mastashield	1 x 13mm fireshield + 1 x 10mm mastashield	Double stud	-/90/90	60/60/60	61	**52**
TSW531	2 x 13mm fireshield	1 x 13mm fireshield + 1 x 6mm Villaboard™	Double stud	-/90/90	30/30/30	61	**53**
TSW532	1 x 13mm fireshield + 1 x 6mm Villaboard™	1 x 13mm fireshield + 1 x 6mm Villaboard™	Double stud	-/90/90	60/60/60	61	**52**
TSW335	1 x 16mm fireshield	1 x 16mm fireshield	Double stud	-/90/90	60/60/60	59	**50***
TSW336	1 x 16mm fireshield	2 x 16mm fireshield	Double stud	-/120/120	60/60/60	59	**51**
TSW337	2 x 16mm fireshield	2 x 16mm fireshield	Double stud	-/120/120	120/120/120	64	**56**
TSW381	1 x 16mm fireshield	1 x 16mm fireshield + 1 x 10mm mastashield	Double stud	-/90/90	60/60/60	58	**50***
TSW382	1 x 16mm fireshield + 1 x 10mm mastashield	1 x 16mm fireshield + 1 x 10mm mastashield	Double stud	-/120/120	60/60/60	59	**51**
TSW534	1 x 16mm fireshield	1 x 16mm fireshield + 1 x 6mm Villaboard™	Double stud	-/90/90	60/60/60	59	**51***
TSW535	2 x 16mm fireshield	1 x 16mm fireshield + 1 x 6mm Villaboard™	Double stud	-/120/120	60/60/60	63	**55**
TSW536	1 x 16mm fireshield + 1 x 6mm Villaboard™	1 x 16mm fireshield + 1 x 6mm Villaboard™	Double stud	-/120/120	60/60/60	62	**54**
TSW320	1 x 13mm fireshield	1 x 13mm fireshield	Staggered stud	-/60/60	30/30/30	46	40
TSW321	1 x 13mm fireshield	2 x 13mm fireshield	Staggered stud	-/90/90	30/30/30	51	45
TSW322	2 x 13mm fireshield	2 x 13mm fireshield	Staggered stud	-/120/120	90/90/90	54	**50**
TSW520	1 x 13mm fireshield	1 x 13mm fireshield + 1 x 6mm Villaboard™	Staggered stud	-/60/60	30/30/30	51	45
TSW522	1 x 13mm fireshield + 1 x 6mm Villaboard™	1 x 13mm fireshield + 1 x 6mm Villaboard™	Staggered stud	-/90/90	60/60/60	54	**50**
TSW325	1 x 16mm fireshield	1 x 16mm fireshield	Staggered stud	-/90/90	60/60/60	47	42
TSW326	1 x 16mm fireshield	2 x 16mm fireshield	Staggered stud	-/120/120	60/60/60	52	47
TSW327	2 x 16mm fireshield	2 x 16mm fireshield	Staggered stud	-/120/120	120/120/120	55	**51**
TSW524	1 x 16mm fireshield	1 x 16mm fireshield + 1 x 6mm Villaboard™	Staggered stud	-/90/90	60/60/60	51	46
TSW526	1 x 16mm fireshield + 1 x 6mm Villaboard™	1 x 16mm fireshield + 1 x 6mm Villaboard™	Staggered stud	-/120/120	60/60/60	54	**50**

1. Double stud acoustic values determined using 160mm cavity with glasswool insulation.
2. Staggered stud acoustic values determined using 120mm cavity with glasswool insulation.
3. * using 200mm frame cavity

TSW10

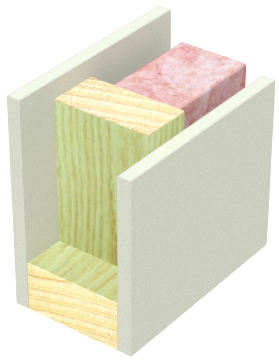

- 1 layer of 10mm **masta**shield or 10mm **water**shield
- Timber stud framing at maximum 600mm centres
- 1 layer of 10mm **masta**shield or 10mm **water**shield

Stud Depth (mm)	Wall Width (mm)	Sound Insulation Rw (Rw + Ctr)				
		No insulation	Pink® Batts Wall R1.5	Pink® Batts Wall R2.0	Polyester R1.5	Report
70	90	33 (25)	37 (28)	-	37 (28)	Day Design 3094-45
90	110	34 (25)	38 (28)	39 (30)	39 (28)	

TSW11

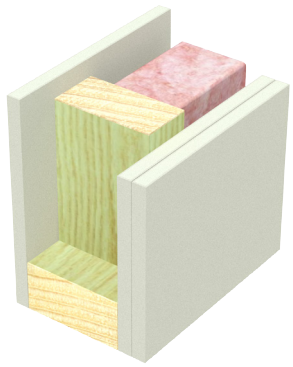

- 1 layer of 10mm **masta**shield or 10mm **water**shield
- Timber stud framing at maximum 600mm centres
- 2 layers of 10mm **masta**shield or 10mm **water**shield

Stud Depth (mm)	Wall Width (mm)	Sound Insulation Rw (Rw + Ctr)				
		No insulation	Pink® Batts Wall R1.5	Pink® Batts Wall R2.0	Polyester R1.5	Report
70	100	37 (30)	41 (33)	-	41 (33)	Day Design 3094-45
90	120	38 (30)	42 (33)	43 (34)	42 (33)	

TSW12

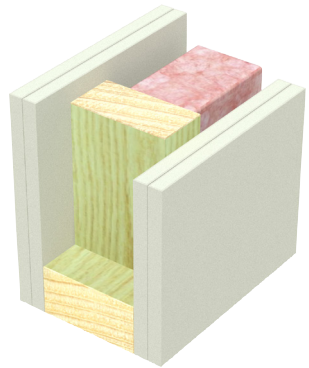

- 2 layers of 10mm **masta**shield or 10mm **water**shield
- Timber stud framing at maximum 600mm centres
- 2 layers of 10mm **masta**shield or 10mm **water**shield

Stud Depth (mm)	Wall Width (mm)	Sound Insulation Rw (Rw + Ctr)				
		No insulation	Pink® Batts Wall R1.5	Pink® Batts Wall R2.0	Polyester R1.5	Report
70	110	41 (33)	44 (36)	-	44 (36)	Day Design 3094-45
90	130	41 (33)	45 (37)	47 (38)	45 (37)	

TSW210

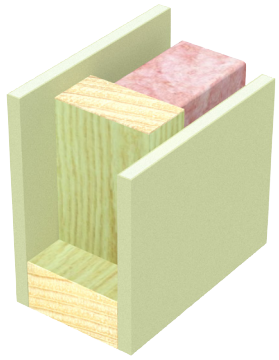

- 1 layer of 10mm **sound**shield or 10mm **opal**
- Timber stud framing at maximum 600mm centres
- 1 layer of 10mm **sound**shield or 10mm **opal**

Stud Depth (mm)	Wall Width (mm)	Sound Insulation Rw (Rw + Ctr)				
		No insulation	Pink® Batts Wall R1.5	Pink® Batts Wall R2.0	Polyester R1.5	Report
70	90	34 (27)	42 (31)	-	41 (41)	Day Design 3094-45
90	110	36 (28)	42 (32)	43 (33)	42 (32)	

TSW211

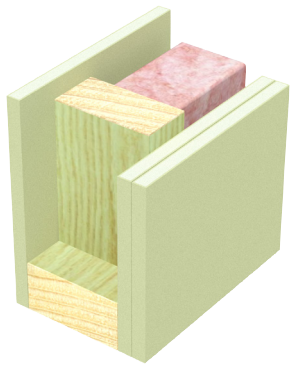

- 1 layer of 10mm **sound**shield or 10mm **opal**
- Timber stud framing at maximum 600mm centres
- 2 layers of 10mm **sound**shield or 10mm **opal**

Stud Depth (mm)	Wall Width (mm)	Sound Insulation Rw (Rw + Ctr)				
		No insulation	Pink® Batts Wall R1.5	Pink® Batts Wall R2.0	Polyester R1.5	
70	100	39 (32)	44 (35)	-	44 (35)	Report Day Design 3094-45
90	120	40 (32)	44 (37)	45 (38)	44 (37)	

TSW212

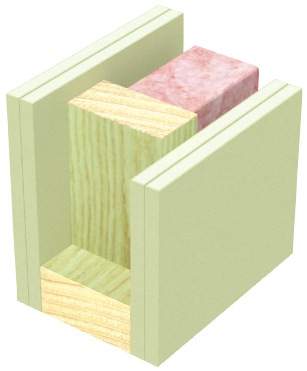

- 2 layers of 10mm **sound**shield or 10mm **opal**
- Timber stud framing at maximum 600mm centres
- 2 layers of 10mm **sound**shield or 10mm **opal**

Stud Depth (mm)	Wall Width (mm)	Sound Insulation Rw (Rw + Ctr)				
		No insulation	Pink® Batts Wall R1.5	Pink® Batts Wall R2.0	Polyester R1.5	
70	110	42 (35)	46 (39)	-	46 (39)	Report Day Design 3094-45
90	110	43 (36)	47 (40)	48 (41)	47 (40)	

TSW250

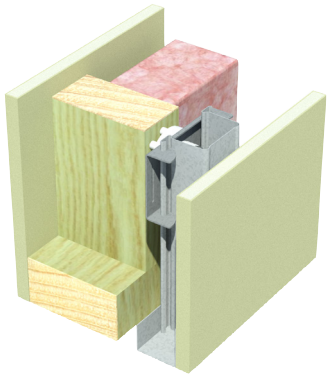

- 1 layer of 10mm **sound**shield or 10mm **opal**
- Timber stud framing at maximum 600mm centres
- Resilient Mounts and minimum 18mm Furring Channel
- 1 layer of 10mm **sound**shield or 10mm **opal**

Stud Depth (mm)	Wall Width (mm)	Sound Insulation Rw (Rw + Ctr)				
		No insulation	Pink® Batts Wall R1.5	Pink® Batts Wall R2.0	Polyester R1.5	
70	127	37 (29)	46 (35)	47 (36)	46 (35)	Report Day Design 3094-45 Note: Impact Sound Resistant
90	147	38 (29)	47 (37)	48 (37)	47 (36)	

TSW251

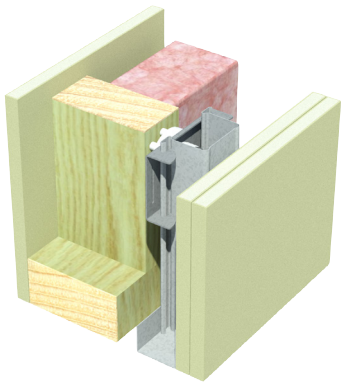

- 1 layer of 10mm **sound**shield or 10mm **opal**
- Timber stud framing at maximum 600mm centres
- Resilient Mounts and minimum 18mm Furring Channel
- 2 layers of 10mm **sound**shield or 10mm **opal**

Stud Depth (mm)	Wall Width (mm)	Sound Insulation Rw (Rw + Ctr)				
		No insulation	Pink® Batts Wall R1.5	Pink® Batts Wall R2.0	Polyester R1.5	
70	137	42 (33)	51 (41)	53 (42)	51 (40)	Report Day Design 3094-45 Note: Impact Sound Resistant
90	157	42 (34)	52 (42)	53 (43)	52 (42)	

TSW15

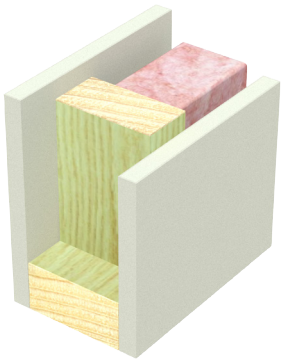

- 1 layer of 13mm **masta**shield or 13mm **water**shield
- Timber stud framing at maximum 600mm centres
- 1 layer of 13mm **masta**shield or 13mm **water**shield

Stud Depth (mm)	Wall Width (mm)	Sound Insulation Rw (Rw + Ctr)				
		No insulation	Pink® Batts Wall R1.5	Pink® Batts Wall R2.0	Polyester R1.5	
70	96	34 (27)	39 (30)	-	39 (30)	Report Day Design 3094-45
90	116	35 (27)	39 (31)	40 (32)	39 (31)	

TSW16

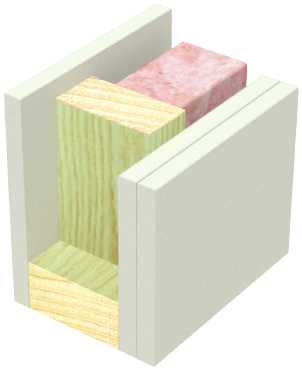

- 1 layer of 13mm **masta**shield or 13mm **water**shield
- Timber stud framing at maximum 600mm centres
- 2 layers of 13mm **masta**shield or 13mm **water**shield

Stud Depth (mm)	Wall Width (mm)	Sound Insulation Rw (Rw + Ctr)				
		No insulation	Pink® Batts Wall R1.5	Pink® Batts Wall R2.0	Polyester R1.5	
70	109	39 (31)	43 (34)	-	43 (34)	Report Day Design 3094-45
90	129	39 (32)	43 (36)	44 (37)	43 (36)	

TSW17

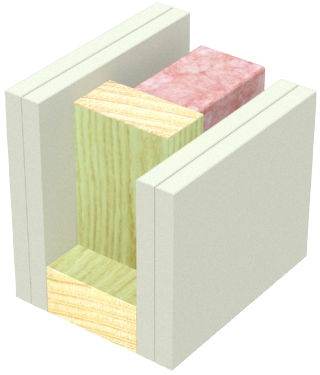

- 2 layers of 13mm **masta**shield or 13mm **water**shield
- Timber stud framing at maximum 600mm centres
- 2 layers of 13mm **masta**shield or 13mm **water**shield

Stud Depth (mm)	Wall Width (mm)	Sound Insulation Rw (Rw + Ctr)				
		No insulation	Pink® Batts Wall R1.5	Pink® Batts Wall R2.0	Polyester R1.5	
70	122	42 (35)	46 (39)	-	46 (39)	Report Day Design 3094-45
90	142	43 (36)	47 (40)	48 (41)	47 (40)	

TSW215

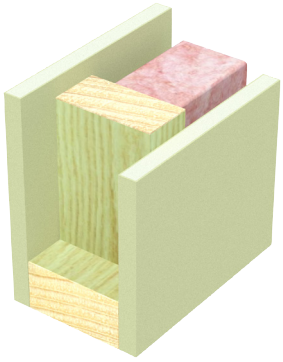

- 1 layer of 13mm **sound**shield
- Timber stud framing at maximum 600mm centres
- 1 layer of 13mm **sound**shield

Stud Depth (mm)	Wall Width (mm)	Sound Insulation Rw (Rw + Ctr)				
		No insulation	Pink® Batts Wall R1.5	Pink® Batts Wall R2.0	Polyester R1.5	
70	96	37 (30)	41 (33)	-	41 (33)	Report Day Design 3094-45
90	116	38 (30)	42 (34)	42 (36)	42 (34)	

TSW216

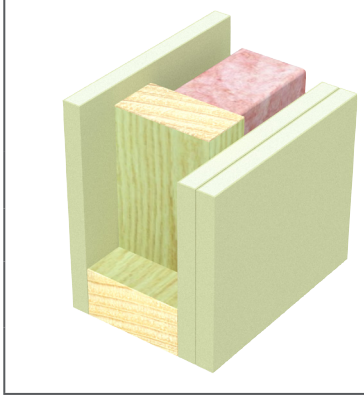

- 1 layer of 13mm **sound**shield
- Timber stud framing at maximum 600mm centres
- 2 layers of 13mm **sound**shield

Stud Depth (mm)	Wall Width (mm)	Sound Insulation Rw (Rw + Ctr)				
		No insulation	Pink® Batts Wall R1.5	Pink® Batts Wall R2.0	Polyester R1.5	
70	109	42 (34)	44 (39)	-	44 (39)	Report Day Design 3094-45
90	129	42 (35)	45 (40)	46 (41)	45 (39)	

TSW217

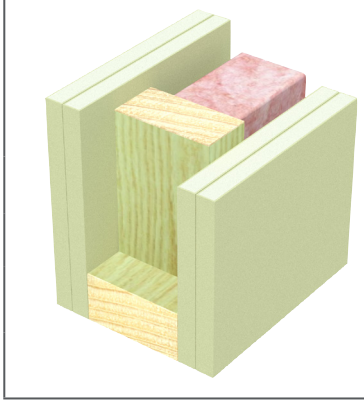

- 2 layers of 13mm **sound**shield
- Timber stud framing at maximum 600mm centres
- 2 layers of 13mm **sound**shield

Stud Depth (mm)	Wall Width (mm)	Sound Insulation Rw (Rw + Ctr)				
		No insulation	Pink® Batts Wall R1.5	Pink® Batts Wall R2.0	Polyester R1.5	
70	122	45 (39)	47 (42)	-	47 (42)	Report Day Design 3094-45
90	142	46 (39)	47 (43)	48 (44)	47 (43)	

TSW255

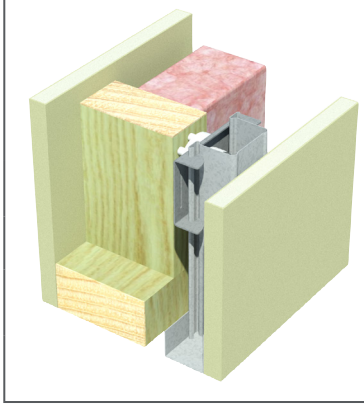

- 1 layer of 13mm **sound**shield
- Timber stud framing at maximum 600mm centres
- Resilient Mounts and minimum 18mm Furring Channel
- 1 layer of 13mm **sound**shield

Stud Depth (mm)	Wall Width (mm)	Sound Insulation Rw (Rw + Ctr)				
		No insulation	Pink® Batts Wall R1.5	Pink® Batts Wall R2.0	Polyester R1.5	
70	133	41 (32)	49 (41)	51 (42)	49 (40)	Report Day Design 3094-45 Note: Impact Sound Resistant
90	153	42 (33)	50 (42)	51 (43)	50 (42)	

TSW256

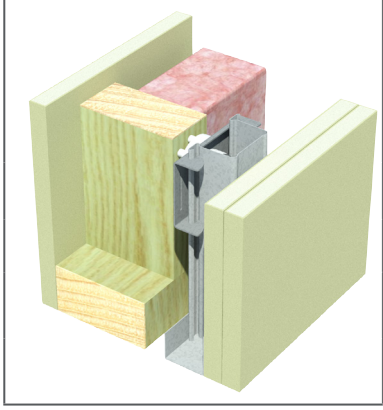

- 1 layer of 13mm **sound**shield
- Timber stud framing at maximum 600mm centres
- Resilient Mounts and minimum 18mm Furring Channel
- 2 layers of 13mm **sound**shield

Stud Depth (mm)	Wall Width (mm)	Sound Insulation Rw (Rw + Ctr)				
		No insulation	Pink® Batts Wall R1.5	Pink® Batts Wall R2.0	Polyester R1.5	
70	146	46 (37)	54 (46)	55 (47)	54 (46)	Report Day Design 3094-45 Note: Impact Sound Resistant
90	166	47 (38)	54 (47)	56 (48)	54 (47)	

TSW20

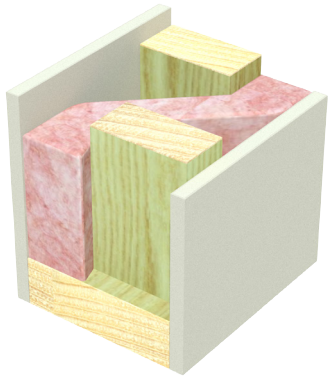

- 1 layer of 10mm **masta**shield or 10mm **water**shield
- Staggered timber studs at maximum 600mm centres (300mm staggered)
- 1 layer of 10mm **masta**shield or 10mm **water**shield

Stud Depth (mm)	Wall Width (mm)	Sound Insulation Rw (Rw + Ctr)				
		No insulation	Pink® Batts Wall R1.5	Pink® Batts Wall R2.0	Polyester R1.5	Report
70 on 90mm plate	110	34 (27)	41 (33)	42 (34)	40 (32)	Day Design 3094-45
90 on 120mm plate	140	35 (29)	42 (33)	43 (34)	42 (32)	Note: Impact Sound Resistant

TSW21

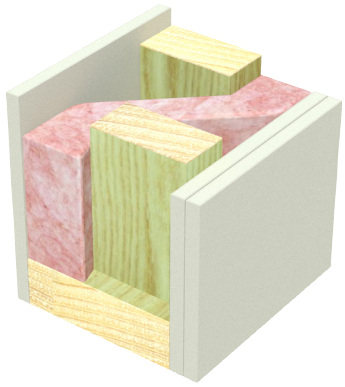

- 1 layer of 10mm **masta**shield or 10mm **water**shield
- Staggered timber studs at maximum 600mm centres (300mm staggered)
- 2 layers of 10mm **masta**shield or 10mm **water**shield

Stud Depth (mm)	Wall Width (mm)	Sound Insulation Rw (Rw + Ctr)				
		No insulation	Pink® Batts Wall R1.5	Pink® Batts Wall R2.0	Polyester R1.5	Report
70 on 90mm plate	120	38 (33)	45 (36)	47 (37)	45 (36)	Day Design 3094-45
90 on 120mm plate	150	38 (33)	47 (38)	48 (39)	47 (38)	Note: Impact Sound Resistant

TSW22

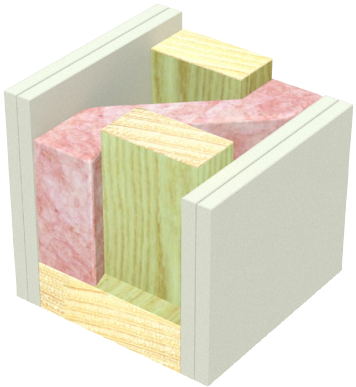

- 2 layers of 10mm **masta**shield or 10mm **water**shield
- Staggered timber studs at maximum 600mm centres (300mm staggered)
- 2 layers of 10mm **masta**shield or 10mm **water**shield

Stud Depth (mm)	Wall Width (mm)	Sound Insulation Rw (Rw + Ctr)				
		No insulation	Pink® Batts Wall R1.5	Pink® Batts Wall R2.0	Polyester R1.5	Report
70 on 90mm plate	130	41 (35)	50 (41)	52 (45)	50 (41)	Day Design 3094-45
90 on 120mm plate	160	42 (36)	51 (44)	53 (45)	51 (43)	Note: Impact Sound Resistant

TSW220

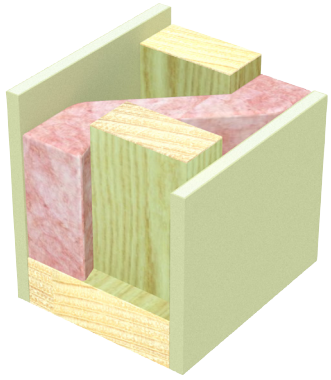

- 1 layer of 10mm **sound**shield or 10mm **opal**
- Staggered timber studs at maximum 600mm centres (300mm staggered)
- 1 layer of 10mm **sound**shield or 10mm **opal**

Stud Depth (mm)	Wall Width (mm)	Sound Insulation Rw (Rw + Ctr)				
		No insulation	Pink® Batts Wall R1.5	Pink® Batts Wall R2.0	Polyester R1.5	Report
70 on 90mm plate	110	36 (29)	43 (34)	45 (36)	43 (34)	Day Design 3094-45
90 on 120mm plate	140	37 (32)	45 (37)	46 (38)	44 (37)	Note: Impact Sound Resistant

TSW221

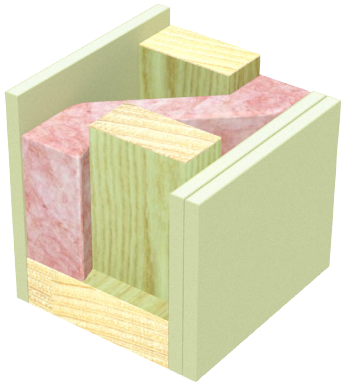

- 1 layer of 10mm **sound**shield or 10mm **opal**
- Staggered timber studs at maximum 600mm centres (300mm staggered)
- 2 layers of 10mm **sound**shield or 10mm **opal**

Stud Depth (mm)	Wall Width (mm)	Sound Insulation Rw (Rw + Ctr)				
		No insulation	Pink® Batts Wall R1.5	Pink® Batts Wall R2.0	Polyester R1.5	Report
70 on 90mm plate	120	40 (36)	48 (40)	50 (41)	48 (40)	Day Design 3094-45
90 on 120mm plate	150	41 (36)	49 (42)	51 (43)	49 (42)	Note: Impact Sound Resistant

TSW222

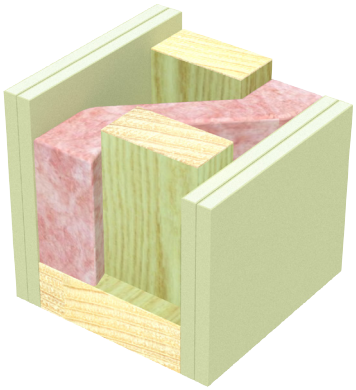

- 2 layers of 10mm **sound**shield or 10mm **opal**
- Staggered timber studs at maximum 600mm centres (300mm staggered)
- 2 layers of 10mm **sound**shield or 10mm **opal**

Stud Depth (mm)	Wall Width (mm)	Sound Insulation Rw (Rw + Ctr)				
		No insulation	Pink® Batts Wall R1.5	Pink® Batts Wall R2.0	Polyester R1.5	Report
70 on 90mm plate	130	44 (38)	52 (46)	54 (47)	52 (45)	Day Design 3094-45
90 on 120mm plate	160	45 (39)	53 (47)	54 (49)	53 (47)	Note: Impact Sound Resistant

TSW25

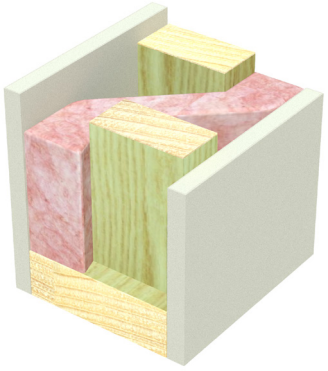

- 1 layer of 13mm **masta**shield or 13mm **water**shield
- Staggered timber studs at maximum 600mm centres (300mm staggered)
- 1 layer of 13mm **masta**shield or 13mm **water**shield

Stud Depth (mm)	Wall Width (mm)	Sound Insulation Rw (Rw + Ctr)				
		No insulation	Pink® Batts Wall R1.5	Pink® Batts Wall R2.0	Polyester R1.5	Report
70 on 90mm plate	116	36 (29)	43 (37)	45 (36)	40 (34)	Day Design 3094-45
90 on 120mm plate	146	37 (32)	45 (37)	46 (38)	44 (36)	Note: Impact Sound Resistant

TSW26

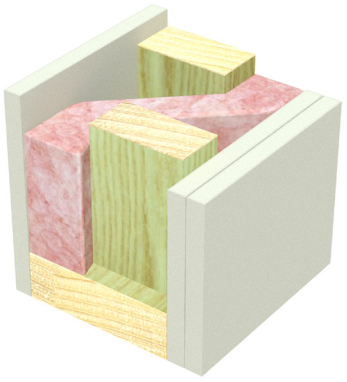

- 1 layer of 13mm **masta**shield or 13mm **water**shield
- Staggered timber studs at maximum 600mm centres (300mm staggered)
- 2 layers of 13mm **masta**shield or 13mm **water**shield

Stud Depth (mm)	Wall Width (mm)	Sound Insulation Rw (Rw + Ctr)				
		No insulation	Pink® Batts Wall R1.5	Pink® Batts Wall R2.0	Polyester R1.5	Report
70 on 90mm plate	129	40 (35)	48 (40)	50 (41)	48 (40)	Day Design 3094-45
90 on 120mm plate	159	41 (35)	49 (42)	51 (43)	49 (42)	Note: Impact Sound Resistant

TSW27

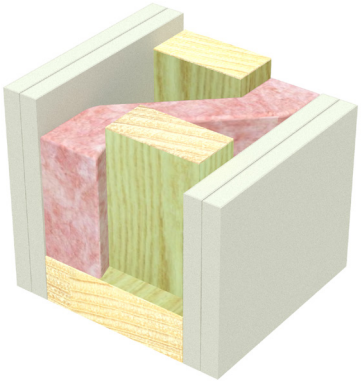

- 2 layers of 13mm **masta**shield or 13mm **water**shield
- Staggered timber studs at maximum 600mm centres (300mm staggered)
- 2 layers of 13mm **masta**shield or 13mm **water**shield

Stud Depth (mm)	Wall Width (mm)	Sound Insulation Rw (Rw + Ctr)				
		No insulation	Pink® Batts Wall R1.5	Pink® Batts Wall R2.0	Polyester R1.5	Report
70 on 90mm plate	142	44 (38)	52 (45)	54 (47)	52 (45)	Day Design 3094-45
90 on 120mm plate	172	45 (39)	53 (47)	54 (49)	53 (47)	Note: Impact Sound Resistant

TSW225

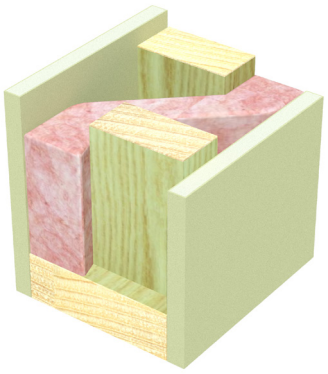

- 1 layer of 13mm **sound**shield
- Staggered timber studs at maximum 600mm centres (300mm staggered)
- 1 layer of 13mm **sound**shield

Stud Depth (mm)	Wall Width (mm)	Sound Insulation Rw (Rw + Ctr)				
		No insulation	Pink® Batts Wall R1.5	Pink® Batts Wall R2.0	Polyester R1.5	Report
70 on 90mm plate	116	39 (32)	47 (40)	48 (41)	46 (40)	Day Design 3094-45
90 on 120mm plate	146	41 (35)	47 (42)	49 (43)	47 (42)	Note: Impact Sound Resistant

TSW226

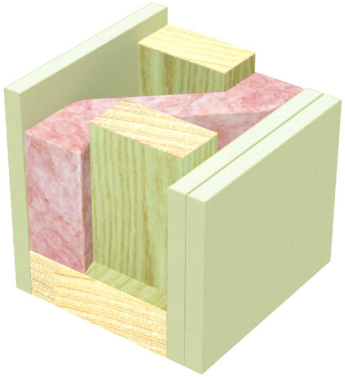

- 1 layer of 13mm **sound**shield
- Staggered timber studs at maximum 600mm centres (300mm staggered)
- 2 layers of 13mm **sound**shield

Stud Depth (mm)	Wall Width (mm)	Sound Insulation Rw (Rw + Ctr)				
		No insulation	Pink® Batts Wall R1.5	Pink® Batts Wall R2.0	Polyester R1.5	Report
70 on 90mm plate	129	44 (39)	51 (45)	52 (47)	51 (45)	Day Design 3094-45
90 on 120mm plate	159	45 (39)	52 (47)	53 (48)	51 (47)	Note: Impact Sound Resistant

TSW227

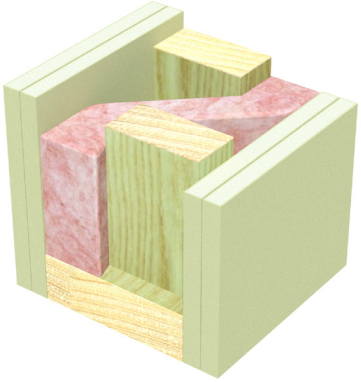

- 2 layers of 13mm **sound**shield
- Staggered timber studs at maximum 600mm centres (300mm staggered)
- 2 layers of 13mm **sound**shield

Stud Depth (mm)	Wall Width (mm)	Sound Insulation Rw (Rw + Ctr)				
		No insulation	Pink® Batts Wall R1.5	Pink® Batts Wall R2.0	Polyester R1.5	Report
70 on 90mm plate	142	48 (42)	54 (50)	55 (51)	54 (50)	Day Design 3094-45
90 on 120mm plate	172	50 (43)	55 (51)	56 (52)	55 (51)	Note: Impact Sound Resistant

TSW301

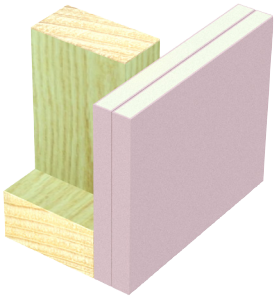

- Timber stud framing at maximum 600mm centres
- 2 layers of 13mm **fire**shield

fireshield can be substituted with **multi**shield or **tru**rock

Fire Resistance Level

-/30/30 and **30/30/30**
rated from the lined side only

Reports
FAR 3348

Stud Depth (mm)	Wall Width (mm)	Sound Insulation Rw (Rw + Ctr)	
		No insulation	Report
70	96	34 (31)	Day Design 3094-45
90	116	34 (31)	

TSW302

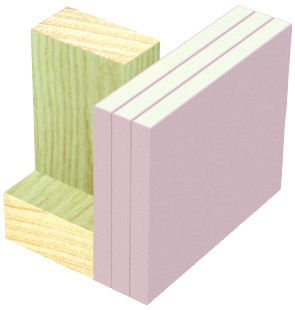

- Timber stud framing at maximum 600mm centres
- 3 layers of 13mm **fire**shield

fireshield can be substituted with **multi**shield or **tru**rock

Fire Resistance Level

-/90/90 and **90/90/90**
rated from the lined side only

Reports
FAR 3348

Stud Depth (mm)	Wall Width (mm)	Sound Insulation Rw (Rw + Ctr)	
		No insulation	Report
70	109	37 (35)	Day Design 3094-45
90	129	37 (35)	

TSW310

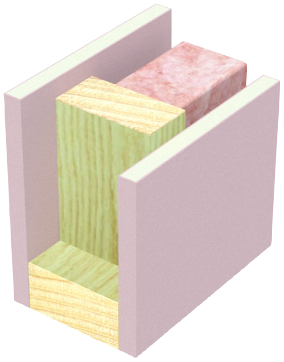

- 1 layer of 13mm **fire**shield
- Timber stud framing at maximum 600mm centres
- 1 layer of 13mm **fire**shield

fireshield can be substituted with **multi**shield or **tru**rock

Fire Resistance Level

-/60/60 and **30/30/30**
rated from both sides

Reports
FAR 3348

Stud Depth (mm)	Wall Width (mm)	Sound Insulation Rw (Rw + Ctr)				
		No insulation	Pink® Batts Wall R1.5	Pink® Batts Wall R2.0	Polyester R1.5	Report
70	96	36 (38)	41 (32)	-	41 (32)	Day Design 3094-45
90	116	37 (29)	41 (33)	42 (34)	41 (33)	

TSW311

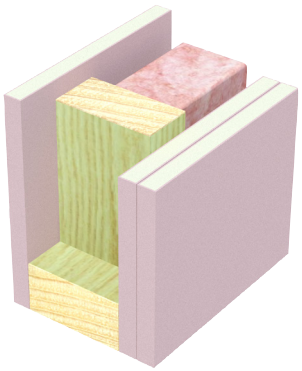

- 1 layer of 13mm **fire**shield
- Timber stud framing at maximum 600mm centres
- 2 layers of 13mm **fire**shield

fireshield can be substituted with **multi**shield or **tru**rock

Fire Resistance Level

-/90/90 and **30/30/30**
rated from both sides

Reports
FAR 3348

Stud Depth (mm)	Wall Width (mm)	Sound Insulation Rw (Rw + Ctr)				
		No insulation	Pink® Batts Wall R1.5	Pink® Batts Wall R2.0	Polyester R1.5	Report
70	109	40 (34)	44 (37)	-	44 (37)	Day Design 3094-45
90	129	41 (34)	44 (38)	45 (39)	44 (38)	

TSW312

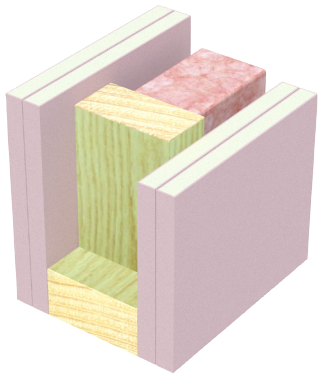

- 2 layers of 13mm **fire**shield
- Timber stud framing at maximum 600mm centres
- 2 layers of 13mm **fire**shield

fireshield can be substituted with **multi**shield or **tru**rock

Fire Resistance Level

-/120/120 and **90/90/90** rated from both sides

Reports FAR 3348

Stud Depth (mm)	Wall Width (mm)	Sound Insulation Rw (Rw + Ctr)				
		No insulation	Pink® Batts Wall R1.5	Pink® Batts Wall R2.0	Polyester R1.5	Report
70	122	44 (37)	47 (41)	-	47 (41)	Day Design 3094-45
90	142	45 (38)	47 (42)	48 (43)	47 (42)	

TSW314

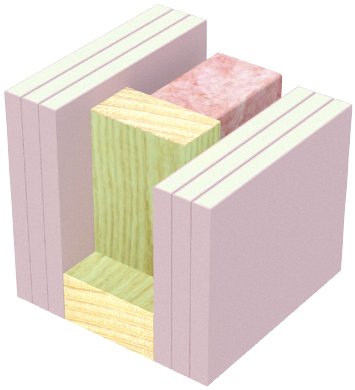

- 3 layers of 13mm **fire**shield
- Timber stud framing at maximum 600mm centres
- 3 layers of 13mm **fire**shield

fireshield can be substituted with **multi**shield or **tru**rock

Fire Resistance Level

-/180/180 and **120/120/120** rated from both sides

Reports FAR 3348

Stud Depth (mm)	Wall Width (mm)	Sound Insulation Rw (Rw + Ctr)				
		No insulation	Pink® Batts Wall R1.5	Pink® Batts Wall R2.0	Polyester R1.5	Report
70	148	49 (42)	51 (45)	-	51 (46)	Day Design 3094-50
90	168	50 (43)	51 (47)	52 (48)	51 (47)	

TSW350

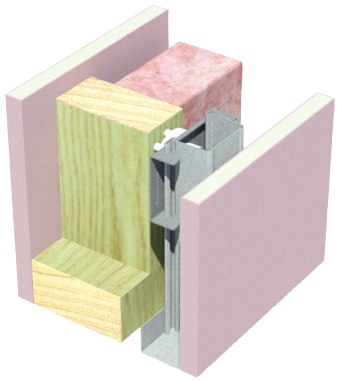

- 1 layer of 13mm **fire**shield
- Timber stud framing at maximum 600mm centres
- Resilient Mounts and minimum 18mm Furring Channel
- 1 layer of 13mm **fire**shield

fireshield can be substituted with **multi**shield or **tru**rock

Fire Resistance Level

-/60/60 and **30/30/30** rated from both sides

Reports FAR 3348

Stud Depth (mm)	Wall Width (mm)	Sound Insulation Rw (Rw + Ctr)				
		No insulation	Pink® Batts Wall R1.5	Pink® Batts Wall R2.0	Polyester R1.5	Report
70	133	37 (29)	47 (36)	47 (36)	46 (36)	Day Design 3094-50 Note: Impact Sound Resistant
90	153	38 (31)	48 (36)	48 (36)	47 (36)	

TSW352

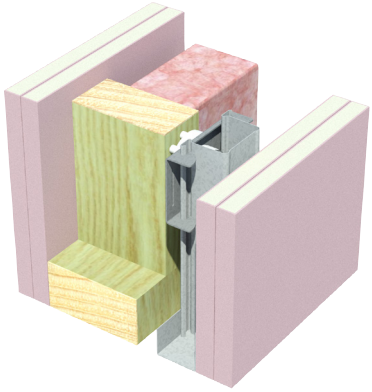

- 2 layers of 13mm **fire**shield
- Timber stud framing at maximum 600mm centres
- Resilient Mounts and minimum 18mm Furring Channel
- 2 layers of 13mm **fire**shield

fireshield can be substituted with **multi**shield or **tru**rock

Fire Resistance Level

-/120/120 and **90/90/90** rated from both sides

Reports FAR 3348

Stud Depth (mm)	Wall Width (mm)	Sound Insulation Rw (Rw + Ctr)				
		No insulation	Pink® Batts Wall R1.5	Pink® Batts Wall R2.0	Polyester R1.5	Report
70	159	48 (38)	56 (47)	57 (48)	56 (47)	Day Design 3094-45 [1]TL554-6 Note: Impact Sound Resistant
90	159	49 (40)	56 (48)	55 (**51**)[1]	56 (48)	

TSW510

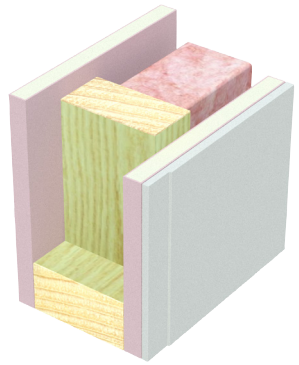

- 1 layer of 13mm **fire**shield
- Timber stud framing at maximum 600mm centres
- 1 layer of 13mm **fire**shield plus 1 layer of 6mm Villaboard™

fireshield can be substituted with **multi**shield or **tru**rock
The order of wall linings can be reversed

Fire Resistance Level

-/60/60 and **30/30/30**
rated from both sides

Reports
FAR 3348

Stud Depth (mm)	Wall Width (mm)	Sound Insulation Rw (Rw + Ctr)				
		No insulation	Pink® Batts Wall R1.5	Pink® Batts Wall R2.0	Polyester R1.5	Report
70	102	40 (33)	44 (37)	-	44 (36)	Day Design 3094-45
90	122	41 (33)	44 (38)	45 (39)	44 (38)	

TSW512

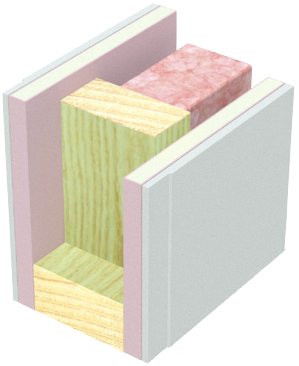

- 1 layer of 13mm **fire**shield plus 1 layer of 6mm Villaboard™
- Timber stud framing at maximum 600mm centres
- 1 layer of 13mm **fire**shield plus 1 layer of 6mm Villaboard™

fireshield can be substituted with **multi**shield or **tru**rock
The order of wall linings can be reversed

Fire Resistance Level

-/90/90 and **60/60/60**
rated from both sides

Reports
FAR 3348

Stud Depth (mm)	Wall Width (mm)	Sound Insulation Rw (Rw + Ctr)				
		No insulation	Pink® Batts Wall R1.5	Pink® Batts Wall R2.0	Polyester R1.5	Report
70	108	44 (36)	47 (41)	-	47 (41)	Day Design 3094-45
90	128	44 (37)	48 (42)	49 (43)	48 (42)	

TSW304

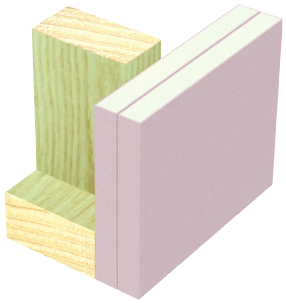

- Timber stud framing at maximum 600mm centres
- 2 layers of 16mm **fire**shield

fireshield can be substituted with **multi**shield or **tru**rock

Fire Resistance Level

-/60/60 and **60/60/60**
rated from the lined side only

Reports
FAR 3348

Stud Depth (mm)	Wall Width (mm)	Sound Insulation Rw (Rw + Ctr)	
		No insulation	Report
70	102	35 (32)	Day Design 3094-45
90	122	35 (32)	

TSW305

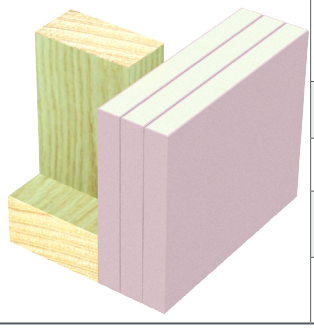

- Timber stud framing at maximum 600mm centres
- 3 layers of 16mm **fire**shield

fireshield can be substituted with **multi**shield or **tru**rock

Fire Resistance Level

-/120/120 and **120/120/120**
rated from the lined side only

Reports
FAR 3348

Stud Depth (mm)	Wall Width (mm)	Sound Insulation Rw (Rw + Ctr)	
		No insulation	Report
70	118	38 (36)	Day Design 3094-45
90	138	38 (36)	

TSW315

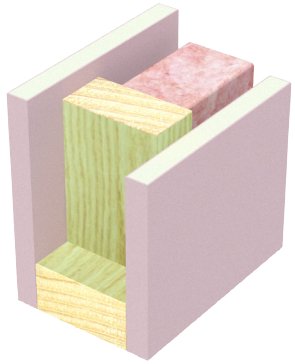

- 1 layer of 16mm **fire**shield
- Timber stud framing at maximum 600mm centres
- 1 layer of 16mm **fire**shield

fireshield can be substituted with **multi**shield or **tru**rock

Fire Resistance Level

-/90/90 and **60/60/60**
rated from both sides

Reports
FAR 3348

Stud Depth (mm)	Wall Width (mm)	Sound Insulation Rw (Rw + Ctr)				
		No insulation	Pink® Batts Wall R1.5	Pink® Batts Wall R2.0	Polyester R1.5	Report
70	102	38 (30)	41 (33)	-	41 (33)	Day Design 3094-45
90	122	38 (30)	42 (34)	42 (36)	42 (34)	

TSW316

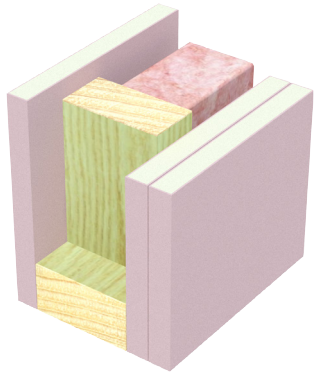

- 1 layer of 16mm **fire**shield
- Timber stud framing at maximum 600mm centres
- 2 layers of 16mm **fire**shield

fireshield can be substituted with **multi**shield or **tru**rock

Fire Resistance Level

-/120/120 and **60/60/60**
rated from both sides

Reports
FAR 3348

Stud Depth (mm)	Wall Width (mm)	Sound Insulation Rw (Rw + Ctr)				
		No insulation	Pink® Batts Wall R1.5	Pink® Batts Wall R2.0	Polyester R1.5	Report
70	118	42 (34)	44 (39)	-	44 (39)	Day Design 3094-45
90	138	43 (35)	44 (40)	46 (41)	44 (40)	

TSW317

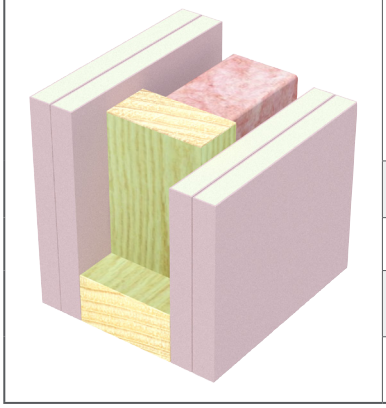

- 2 layers of 16mm **fire**shield
- Timber stud framing at maximum 600mm centres
- 2 layers of 16mm **fire**shield

fireshield can be substituted with **multi**shield or **tru**rock

Fire Resistance Level

-/120/120 and **120/120/120** rated from both sides

Reports FAR 3348

Stud Depth (mm)	Wall Width (mm)	Sound Insulation Rw (Rw + Ctr)				
		No insulation	Pink® Batts Wall R1.5	Pink® Batts Wall R2.0	Polyester R1.5	Report
70	134	45 (39)	47 (42)	-	47 (42)	Day Design 3094-45
90	154	46 (39)	47 (43)	48 (44)	47 (43)	

TSW319

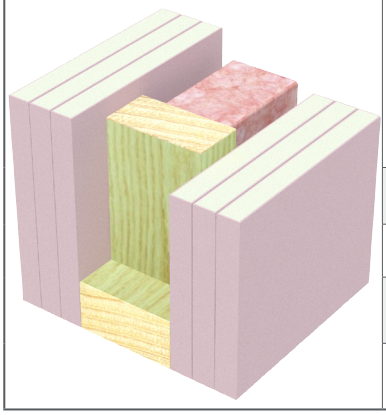

- 3 layers of 16mm **fire**shield
- Timber stud framing at maximum 600mm centres
- 3 layers of 16mm **fire**shield

fireshield can be substituted with **multi**shield or **tru**rock

Fire Resistance Level

-/240/240 and **120/120/120** rated from both sides

Reports FAR 3348

Stud Depth (mm)	Wall Width (mm)	Sound Insulation Rw (Rw + Ctr)				
		No insulation	Pink® Batts Wall R1.5	Pink® Batts Wall R2.0	Polyester R1.5	Report
70	166	50 (43)	51 (46)	-	51 (46)	Day Design 3094-50
90	186	50 (44)	51 (47)	52 (48)	51 (47)	

TSW355

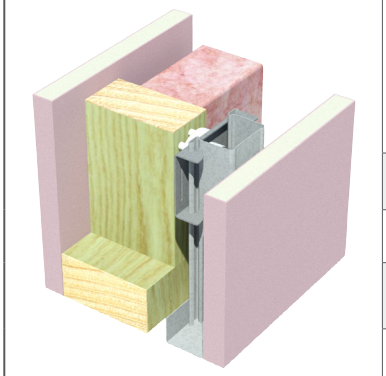

- 1 layer of 16mm **fire**shield
- Timber stud framing at maximum 600mm centres
- Resilient Mounts and minimum 18mm Furring Channel
- 1 layer of 16mm **fire**shield

fireshield can be substituted with **multi**shield or **tru**rock

Fire Resistance Level

-/90/90 and **60/60/60** rated from both sides

Reports FAR 3348

Stud Depth (mm)	Wall Width (mm)	Sound Insulation Rw (Rw + Ctr)				
		No insulation	Pink® Batts Wall R1.5	Pink® Batts Wall R2.0	Polyester R1.5	Report
70	139	41 (32)	50 (41)	51 (42)	49 (41)	Day Design 3094-50
90	159	42 (33)	50 (42)	51 (43)	50 (42)	Note: Impact Sound Resistant

TSW357

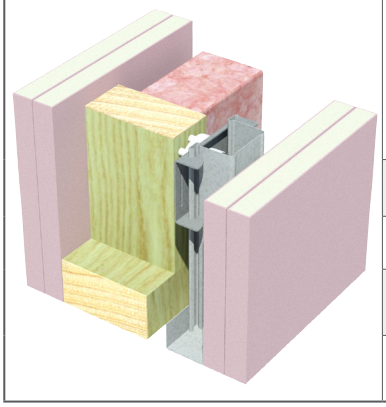

- 2 layers of 16mm **fire**shield
- Timber stud framing at maximum 600mm centres
- Resilient Mounts and minimum 18mm Furring Channel
- 2 layers of 16mm **fire**shield

fireshield can be substituted with **multi**shield or **tru**rock

Fire Resistance Level

-/120/120 and **120/120/120** rated from both sides

Reports FAR 3348

Stud Depth (mm)	Wall Width (mm)	Sound Insulation Rw (Rw + Ctr)				
		No insulation	Pink® Batts Wall R1.5	Pink® Batts Wall R2.0	Polyester R1.5	Report
70	171	50 (40)	57 (49)	58 (**50**)	57 (49)	Day Design 3094-45
90	191	51 (42)	57 (**50**)	58 (**51**)	57 (**50**)	Note: Impact Sound Resistant

TSW514

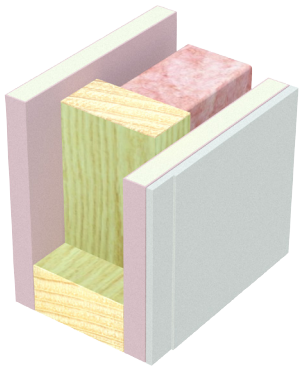

- 1 layer of 16mm **fire**shield
- Timber stud framing at maximum 600mm centres
- 1 layer of 16mm **fire**shield plus 1 layer of 6mm Villaboard™

fireshield can be substituted with **multi**shield or **tru**rock
The order of wall linings can be reversed

Fire Resistance Level

-/90/90 and **60/60/60** rated from both sides

Reports FAR 3348

Stud Depth (mm)	Wall Width (mm)	Sound Insulation Rw (Rw + Ctr)				
		No insulation	Pink® Batts Wall R1.5	Pink® Batts Wall R2.0	Polyester R1.5	Report
70	108	41 (33)	44 (38)	-	44 (38)	Day Design 3094-45
90	128	42 (33)	44 (39)	45 (40)	44 (39)	

TSW516

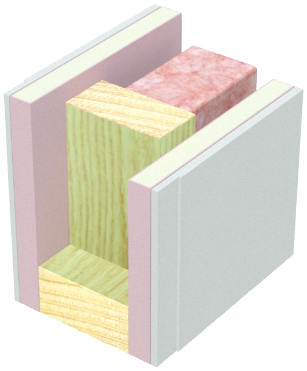

- 1 layer of 16mm **fire**shield plus 1 layer of 6mm Villaboard™
- Timber stud framing at maximum 600mm centres
- 1 layer of 16mm **fire**shield plus 1 layer of 6mm Villaboard™

fireshield can be substituted with **multi**shield or **tru**rock
The order of wall linings can be reversed

Fire Resistance Level

-/120/120 and **60/60/60** rated from both sides

Reports FAR 3348

Stud Depth (mm)	Wall Width (mm)	Sound Insulation Rw (Rw + Ctr)				
		No insulation	Pink® Batts Wall R1.5	Pink® Batts Wall R2.0	Polyester R1.5	Report
70	114	44 (37)	47 (42)	-	47 (42)	Day Design 3094-45
90	134	45 (38)	48 (43)	49 (44)	48 (43)	

TSW330

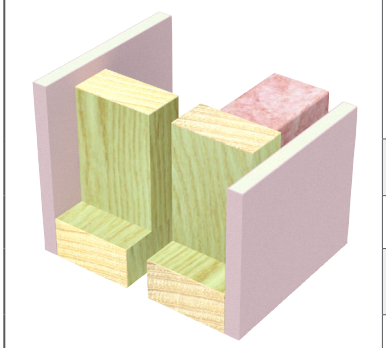

- 1 layer of 13mm **fire**shield
- Timber stud framing at maximum 600mm centres
- Minimum 20mm air gap
- Timber stud framing at maximum 600mm centres
- 1 layer of 13mm **fire**shield

fireshield can be substituted with **multi**shield or **tru**rock
Insulation in one frame only

Fire Resistance Level

-/60/60 and **30/30/30**
rated from both sides

Reports
FAR 3348

Stud Depth (mm)	Wall Width (mm)	Sound Insulation Rw (Rw + Ctr)				
		No insulation	Pink® Batts Wall R1.5	Pink® Batts Wall R2.0	Polyester R1.5	Report
70 160mm cavity	186	43 (37)	52 (42)	53 (43)	51 (42)	Day Design 3094-45 Note: Impact Sound Resistant - Discontinuous Construction
90 200mm cavity	226	45 (38)	52 (44)	54 (44)	52 (43)	

TSW331

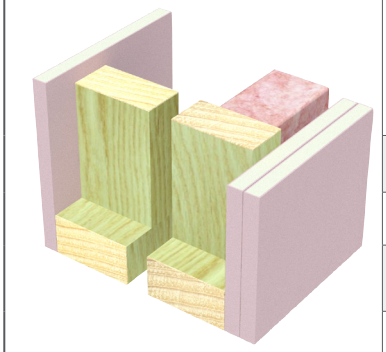

- 1 layer of 13mm **fire**shield
- Timber stud framing at maximum 600mm centres
- Minimum 20mm air gap
- Timber stud framing at maximum 600mm centres
- 2 layers of 13mm **fire**shield

fireshield can be substituted with **multi**shield or **tru**rock
Insulation in one frame only

Fire Resistance Level

-/90/90 and **30/30/30**
rated from both sides

Reports
FAR 3348

Stud Depth (mm)	Wall Width (mm)	Sound Insulation Rw (Rw + Ctr)				
		No insulation	Pink® Batts Wall R1.5	Pink® Batts Wall R2.0	Polyester R1.5	Report
70 160mm cavity	199	48 (41)	57 (48)	58 (49)	56 (48)	Day Design 3094-45 Note: Impact Sound Resistant - Discontinuous Construction
90 200mm cavity	239	50 (42)	57 (**50**)	59 (**50**)	57 (49)	

TSW332

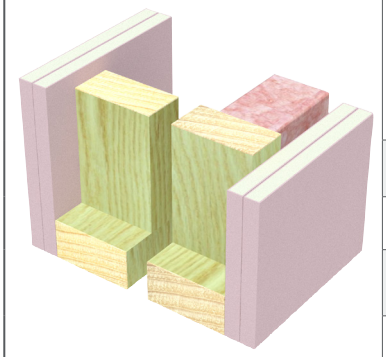

- 2 layers of 13mm **fire**shield
- Timber stud framing at maximum 600mm centres
- Minimum 20mm air gap
- Timber stud framing at maximum 600mm centres
- 2 layers of 13mm **fire**shield

fireshield can be substituted with **multi**shield or **tru**rock
Insulation in one frame only

Fire Resistance Level

-/120/120 and **90/90/90**
rated from both sides

Reports
FAR 3348

Stud Depth (mm)	Wall Width (mm)	Sound Insulation Rw (Rw + Ctr)				
		No insulation	Pink® Batts Wall R1.5	Pink® Batts Wall R2.0	Polyester R1.5	Report
70 160mm cavity	212	53 (45)	62 (**54**)	63 (**55**)	61 (**53**)	Day Design 3094-45 Note: Impact Sound Resistant - Discontinuous Construction
90 200mm cavity	252	55 (46)	62 (**55**)	64 (**55**)	62 (**55**)	

TSW380

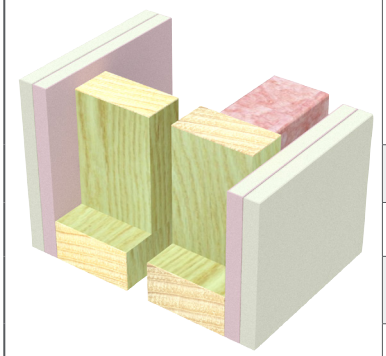

- 1 layer of 13mm **fire**shield plus 1 layer of 13mm **masta**shield
- Timber stud framing at maximum 600mm centres
- Minimum 20mm air gap
- Timber stud framing at maximum 600mm centres
- 1 layer of 13mm **fire**shield plus 1 layer of 13mm **masta**shield

fireshield can be substituted with **multi**shield or **tru**rock
mastashield can be substituted with **water**shield

Fire Resistance Level

-/90/90 and **60/60/60**
rated from both sides

Reports
FAR 3348

Stud Depth (mm)	Wall Width (mm)	Sound Insulation Rw (Rw + Ctr)				
		No insulation	Pink® Batts Wall R1.5	Pink® Batts Wall R2.0	Polyester R1.5	Report
70 160mm cavity	212	52 (44)	61 (**52**)	62 (**53**)	60 (**52**)	Day Design 3094-45 Note: Impact Sound Resistant - Discontinuous Construction
90 200mm cavity	252	53 (45)	61 (**54**)	63 (**54**)	61 (**53**)	

TSW531

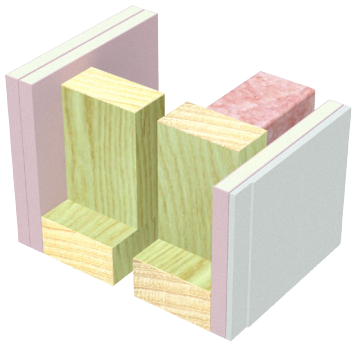

- 2 layers of 13mm **fire**shield
- Timber stud framing at maximum 600mm centres
- Minimum 20mm air gap
- Timber stud framing at maximum 600mm centres
- 1 layer of 13mm **fire**shield plus 1 layer of 6mm Villaboard™

fireshield can be substituted with **multi**shield or **tru**rock
The order of wall linings can be reversed

Fire Resistance Level

-/90/90 and **30/30/30**
rated from both sides

Reports
FAR 3348

Stud Depth (mm)	Wall Width (mm)	Sound Insulation Rw (Rw + Ctr)				
		No insulation	Pink® Batts Wall R1.5	Pink® Batts Wall R2.0	Polyester R1.5	Report
70 160mm cavity	205	53 (45)	61 (**53**)	63 (**54**)	61 (**53**)	Day Design 3094-45 Note: Impact Sound Resistant - Discontinuous Construction
90 200mm cavity	245	54 (45)	62 (**55**)	64 (**55**)	61 (**54**)	

TSW532

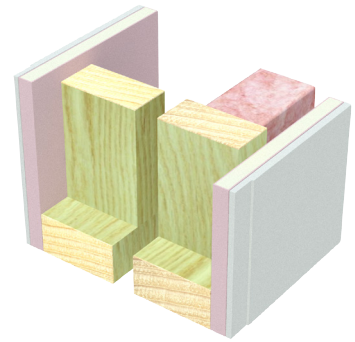

- 1 layer of 13mm **fire**shield plus 1 layer of 6mm Villaboard™
- Timber stud framing at maximum 600mm centres
- Minimum 20mm air gap
- Timber stud framing at maximum 600mm centres
- 1 layer of 13mm **fire**shield plus 1 layer of 6mm Villaboard™

fireshield can be substituted with **multi**shield or **tru**rock
The order of wall linings can be reversed

Fire Resistance Level

-/90/90 and **60/60/60**
rated from both sides

Reports
FAR 3348

Stud Depth (mm)	Wall Width (mm)	Sound Insulation Rw (Rw + Ctr)				
		No insulation	Pink® Batts Wall R1.5	Pink® Batts Wall R2.0	Polyester R1.5	Report
70 160mm cavity	199	52 (44)	61 (**52**)	62 (**53**)	60 (**52**)	Day Design 3094-45 Note: Impact Sound Resistant - Discontinuous Construction
90 200mm cavity	239	53 (45)	61 (**54**)	63 (**54**)	61 (**53**)	

TSW335

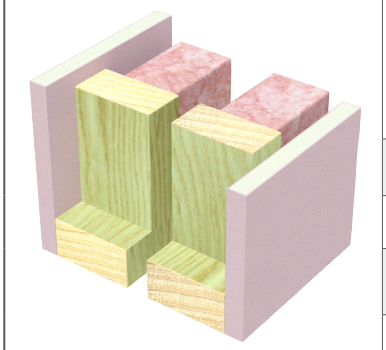

- 1 layer of 16mm **fire**shield
- Timber stud framing at maximum 600mm centres
- Minimum 20mm air gap
- Timber stud framing at maximum 600mm centres
- 1 layer of 16mm **fire**shield

fireshield can be substituted with **multi**shield or **tru**rock

Fire Resistance Level

-/90/90 and **60/60/60** rated from both sides

Reports FAR 3348

Stud Depth (mm)	Wall Width (mm)	Sound Insulation Rw (Rw + Ctr)					
		No insulation	Pink® Batts Wall R1.5	2 x Pink® Batts Wall R1.5	Pink® Batts Wall R2.0	2 x Pink® Batts Wall R2.0	Report Day Design 3094-45 4738-17 Note: Impact Sound Resistant - Discontinuous Construction
70 160mm cavity	192	46 (39)	54 (45)	58 (48)	55 (45)	59 (49)	
90 200mm cavity	232	47 (39)	55 (46)	59 (**50**)	56 (47)	60 (**51**)	

TSW336

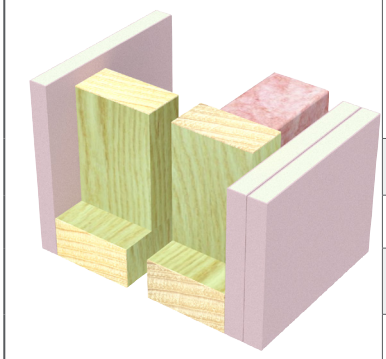

- 1 layer of 16mm **fire**shield
- Timber stud framing at maximum 600mm centres
- Minimum 20mm air gap
- Timber stud framing at maximum 600mm centres
- 2 layers of 16mm **fire**shield

fireshield can be substituted with **multi**shield or **tru**rock
Insulation in one frame only

Fire Resistance Level

-/120/120 and **60/60/60** rated from both sides

Reports FAR 3348

Stud Depth (mm)	Wall Width (mm)	Sound Insulation Rw (Rw + Ctr)				
		No insulation	Pink® Batts Wall R1.5	Pink® Batts Wall R2.0	Polyester R1.5	Report Day Design 3094-45 Note: Impact Sound Resistant - Discontinuous Construction
70 160mm cavity	208	51 (43)	59 (**51**)	60 (**51**)	58 (**50**)	
90 200mm cavity	248	52 (44)	60 (**52**)	61 (**53**)	59 (**52**)	

TSW337

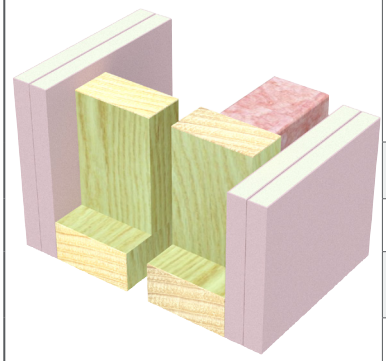

- 2 layers of 16mm **fire**shield
- Timber stud framing at maximum 600mm centres
- Minimum 20mm air gap
- Timber stud framing at maximum 600mm centres
- 2 layers of 16mm **fire**shield

fireshield can be substituted with **multi**shield or **tru**rock
Insulation in one frame only

Fire Resistance Level

-/120/120 and **120/120/120** rated from both sides

Reports FAR 3348

Stud Depth (mm)	Wall Width (mm)	Sound Insulation Rw (Rw + Ctr)				
		No insulation	Pink® Batts Wall R1.5	Pink® Batts Wall R2.0	Polyester R1.5	Report Day Design 3094-45 Note: Impact Sound Resistant - Discontinuous Construction
70 160mm cavity	224	56 (47)	64 (**56**)	66 (**57**)	63 (**56**)	
90 200mm cavity	264	57 (48)	65 (**58**)	66 (**59**)	64 (**58**)	

TSW381

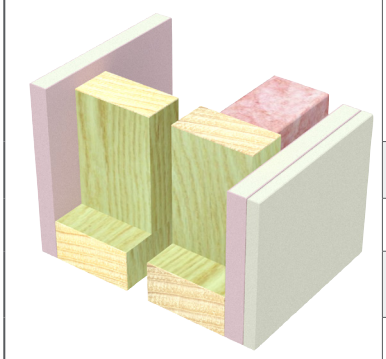

- 1 layer of 16mm **fire**shield
- Timber stud framing at maximum 600mm centres
- Minimum 20mm air gap
- Timber stud framing at maximum 600mm centres
- 1 layer of 16mm **fire**shield plus 1 layer of 10mm **masta**shield

fireshield can be substituted with **multi**shield or **tru**rock
mastashield can be substituted with **water**shield

Fire Resistance Level

-/90/90 and **60/60/60** rated from both sides

Reports FAR 3348

Stud Depth (mm)	Wall Width (mm)	Sound Insulation Rw (Rw + Ctr)				
		No insulation	Pink® Batts Wall R1.5	Pink® Batts Wall R2.0	Polyester R1.5	Report Day Design 3094-45 Note: Impact Sound Resistant - Discontinuous Construction
70 160mm cavity	202	49 (41)	57 (48)	58 (49)	56 (48)	
90 200mm cavity	242	50 (42)	58 (**50**)	59 (**51**)	57 (49)	

TSW382

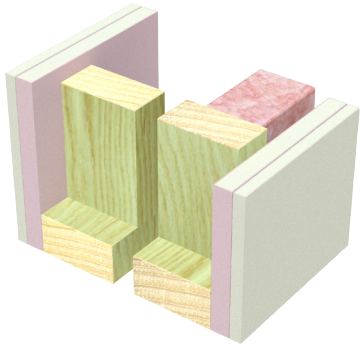

- 1 layer of 16mm **fire**shield plus 1 layer of 10mm **masta**shield
- Timber stud framing at maximum 600mm centres
- Minimum 20mm air gap
- Timber stud framing at maximum 600mm centres
- 1 layer of 16mm **fire**shield plus 1 layer of 10mm **masta**shield

fireshield can be substituted with **multi**shield or **tru**rock
mastashield can be substituted with **water**shield

Fire Resistance Level

-/120/120 and **60/60/60** rated from both sides

Reports FAR 3348

Stud Depth (mm)	Wall Width (mm)	Sound Insulation Rw (Rw + Ctr)				
		No insulation	Pink® Batts Wall R1.5	Pink® Batts Wall R2.0	Polyester R1.5	Report
70 160mm cavity	212	51 (43)	59 (**51**)	61 (**52**)	59 (**51**)	Day Design 3094-45 Note: Impact Sound Resistant - Discontinuous Construction
90 200mm cavity	252	53 (44)	60 (**53**)	62 (**54**)	59 (**52**)	

TSW534

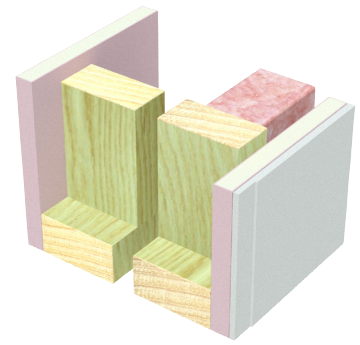

- 1 layer of 16mm **fire**shield
- Timber stud framing at maximum 600mm centres
- Minimum 20mm air gap
- Timber stud framing at maximum 600mm centres
- 1 layer of 16mm **fire**shield plus 1 layer of 6mm Villaboard™

fireshield can be substituted with **multi**shield or **tru**rock
The order of wall linings can be reversed

Fire Resistance Level

-/90/90 and **60/60/60** rated from both sides

Reports FAR 3348

Stud Depth (mm)	Wall Width (mm)	Sound Insulation Rw (Rw + Ctr)				
		No insulation	Pink® Batts Wall R1.5	Pink® Batts Wall R2.0	Polyester R1.5	Report
70 160mm cavity	198	50 (42)	58 (49)	60 (**50**)	57 (49)	Day Design 3094-45 Note: Impact Sound Resistant - Discontinuous Construction
90 200mm cavity	238	51 (43)	59 (**51**)	61 (**52**)	58 (**50**)	

TSW535

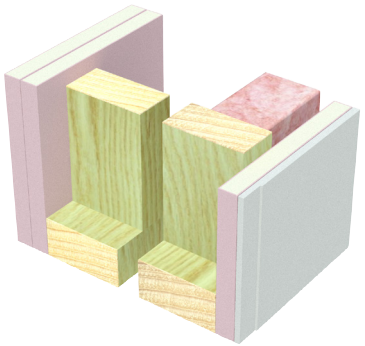

- 2 layers of 16mm **fire**shield
- Timber stud framing at maximum 600mm centres
- Minimum 20mm air gap
- Timber stud framing at maximum 600mm centres
- 1 layer of 16mm **fire**shield plus 1 layer of 6mm Villaboard™

fireshield can be substituted with **multi**shield or **tru**rock
The order of wall linings can be reversed

Fire Resistance Level

-/120/120 and **60/60/60** rated from both sides

Reports FAR 3348

Stud Depth (mm)	Wall Width (mm)	Sound Insulation Rw (Rw + Ctr)				
		No insulation	Pink® Batts Wall R1.5	Pink® Batts Wall R2.0	Polyester R1.5	Report
70 160mm cavity	214	55 (46)	63 (**55**)	65 (**56**)	63 (**55**)	Day Design 3094-45 Note: Impact Sound Resistant - Discontinuous Construction
90 200mm cavity	254	56 (47)	64 (**57**)	66 (**58**)	63 (**56**)	

TSW536

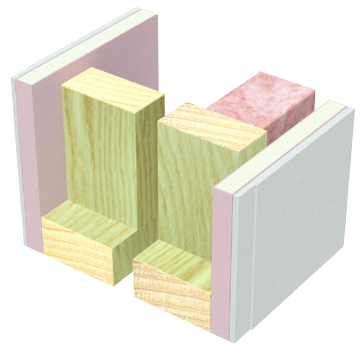

- 1 layer of 16mm **fire**shield plus 1 layer of 6mm Villaboard™
- Timber stud framing at maximum 600mm centres
- Minimum 20mm air gap
- Timber stud framing at maximum 600mm centres
- 1 layer of 16mm **fire**shield plus 1 layer of 6mm Villaboard™

fireshield can be substituted with **multi**shield or **tru**rock
The order of wall linings can be reversed

Fire Resistance Level

-/120/120 and **60/60/60** rated from both sides

Reports FAR 3348

Stud Depth (mm)	Wall Width (mm)	Sound Insulation Rw (Rw + Ctr)				
		No insulation	Pink® Batts Wall R1.5	Pink® Batts Wall R2.0	Polyester R1.5	Report
70 160mm cavity	204	54 (45)	62 (**54**)	63 (**54**)	61 (**53**)	Day Design 3094-45 Note: Impact Sound Resistant - Discontinuous Construction
90 200mm cavity	244	55 (46)	62 (**55**)	64 (**56**)	62 (**55**)	

TSW320

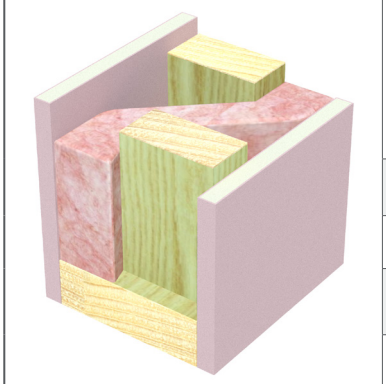

- 1 layer of 13mm **fire**shield
- Staggered timber studs at maximum 600mm centres (300mm staggered)
- 1 layer of 13mm **fire**shield

fireshield can be substituted with **multi**shield or **tru**rock

Fire Resistance Level

-/60/60 and **30/30/30** rated from both sides

Reports FAR 3348

Stud Depth (mm)	Wall Width (mm)	Sound Insulation Rw (Rw + Ctr)				
		No insulation	Pink® Batts Wall R1.5	Pink® Batts Wall R2.0	Polyester R1.5	Report
70 on 90mm plate	116	37 (31)	45 (38)	47 (39)	45 (38)	Day Design 3094-45
90 on 120mm plate	146	38 (33)	46 (40)	48 (41)	46 (40)	Note: Impact Sound Resistant

TSW321

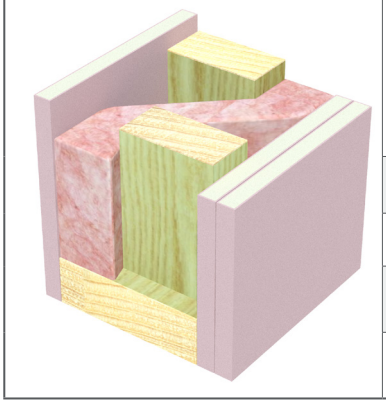

- 1 layer of 13mm **fire**shield
- Staggered timber studs at maximum 600mm centres (300mm staggered)
- 2 layers of 13mm **fire**shield

fireshield can be substituted with **multi**shield or **tru**rock

Fire Resistance Level

-/90/90 and **30/30/30** rated from both sides

Reports FAR 3348

Stud Depth (mm)	Wall Width (mm)	Sound Insulation Rw (Rw + Ctr)				
		No insulation	Pink® Batts Wall R1.5	Pink® Batts Wall R2.0	Polyester R1.5	Report
70 on 90mm plate	129	42 (37)	50 (43)	54 (45)	50 (43)	Day Design 3094-45
90 on 120mm plate	159	43 (38)	51 (45)	52 (46)	51 (45)	Note: Impact Sound Resistant

TSW322

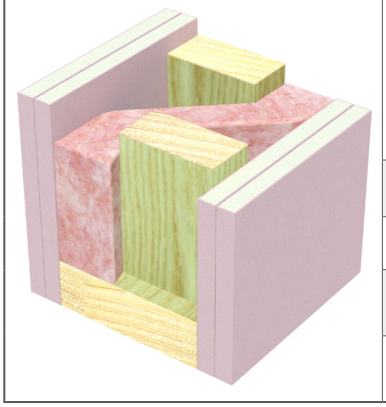

- 2 layers of 13mm **fire**shield
- Staggered timber studs at maximum 600mm centres (300mm staggered)
- 2 layers of 13mm **fire**shield

fireshield can be substituted with **multi**shield or **tru**rock

Fire Resistance Level

-/120/120 and **90/90/90** rated from both sides

Reports FAR 3348

Stud Depth (mm)	Wall Width (mm)	Sound Insulation Rw (Rw + Ctr)				
		No insulation	Pink® Batts Wall R1.5	Pink® Batts Wall R2.0	Polyester R1.5	Report
70 on 90mm plate	142	46 (41)	54 (49)	55 (**50**)	54 (48)	Day Design 3094-45
90 on 120mm plate	172	48 (42)	54 (**50**)	55 (**51**)	54 (**50**)	Note: Impact Sound Resistant

TSW520

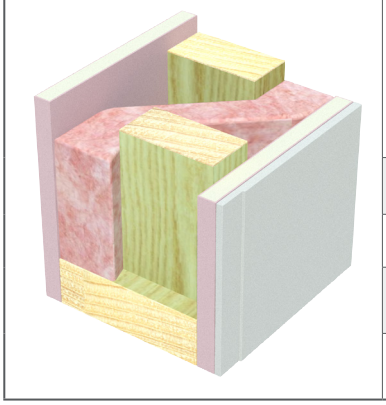

- 1 layer of 13mm **fire**shield
- Staggered timber studs at maximum 600mm centres (300mm staggered)
- 1 layer of 13mm **fire**shield plus 1 layer of 6mm Villaboard™

fireshield can be substituted with **multi**shield or **tru**rock
The order of wall linings can be reversed

Fire Resistance Level

-/60/60 and **30/30/30** rated from both sides

Reports FAR 3348

Stud Depth (mm)	Wall Width (mm)	Sound Insulation Rw (Rw + Ctr)				
		No insulation	Pink® Batts Wall R1.5	Pink® Batts Wall R2.0	Polyester R1.5	Report
70 on 90mm plate	122	42 (36)	50 (43)	51 (44)	50 (43)	Day Design 3094-45
90 on 120mm plate	152	43 (37)	51 (45)	52 (46)	51 (44)	Note: Impact Sound Resistant

TSW522

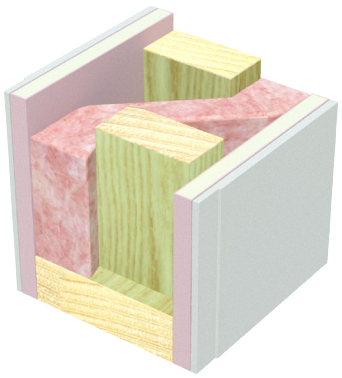

- 1 layer of 13mm **fire**shield plus 1 layer of 6mm Villaboard™
- Staggered timber studs at maximum 600mm centres (300mm staggered)
- 1 layer of 13mm **fire**shield plus 1 layer of 6mm Villaboard™

fireshield can be substituted with **multi**shield or **tru**rock
The order of wall linings can be reversed

Fire Resistance Level

-/90/90 and **60/60/60** rated from both sides

Reports FAR 3348

Stud Depth (mm)	Wall Width (mm)	Sound Insulation Rw (Rw + Ctr)				
		No insulation	Pink® Batts Wall R1.5	Pink® Batts Wall R2.0	Polyester R1.5	Report
70 on 90mm plate	128	46 (39)	54 (47)	55 (48)	54 (47)	Day Design 3094-45
90 on 120mm plate	158	47 (40)	54 (49)	56 (**50**)	54 (49)	Note: Impact Sound Resistant

TSW325

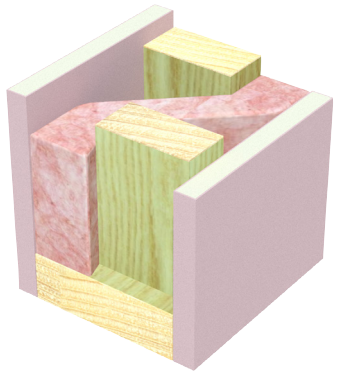

- 1 layer of 16mm **fire**shield
- Staggered timber studs at maximum 600mm centres (300mm staggered)
- 1 layer of 16mm **fire**shield

fireshield can be substituted with **multi**shield or **tru**rock

Fire Resistance Level

-/90/90 and **60/60/60** rated from both sides

Reports FAR 3348

Stud Depth (mm)	Wall Width (mm)	Sound Insulation Rw (Rw + Ctr)				
		No insulation	Pink® Batts Wall R1.5	Pink® Batts Wall R2.0	Polyester R1.5	Report
70 on 90mm plate	122	39 (32)	47 (40)	48 (41)	47 (40)	Day Design 3094-45
90 on 120mm plate	152	41 (35)	47 (42)	49 (43)	47 (42)	Note: Impact Sound Resistant

TSW326

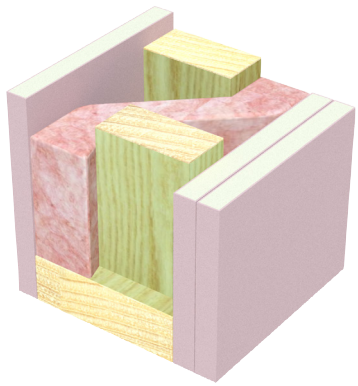

- 1 layer of 16mm **fire**shield
- Staggered timber studs at maximum 600mm centres (300mm staggered)
- 2 layers of 16mm **fire**shield

fireshield can be substituted with **multi**shield or **tru**rock

Fire Resistance Level

-/120/120 and **60/60/60** rated from both sides

Reports FAR 3348

Stud Depth (mm)	Wall Width (mm)	Sound Insulation Rw (Rw + Ctr)				
		No insulation	Pink® Batts Wall R1.5	Pink® Batts Wall R2.0	Polyester R1.5	Report
70 on 90mm plate	138	44 (39)	51 (46)	52 (47)	51 (45)	Day Design 3094-45
90 on 120mm plate	168	45 (40)	52 (47)	53 (48)	51 (47)	Note: Impact Sound Resistant

TSW327

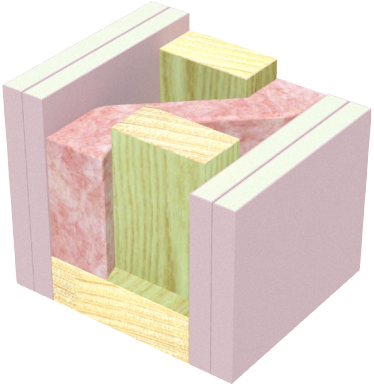

- 2 layers of 16mm **fire**shield
- Staggered timber studs at maximum 600mm centres (300mm staggered)
- 2 layers of 16mm **fire**shield

fireshield can be substituted with **multi**shield or **tru**rock

Fire Resistance Level

-/120/120 and **120/120/120** rated from both sides

Reports FAR 3348

Stud Depth (mm)	Wall Width (mm)	Sound Insulation Rw (Rw + Ctr)				
		No insulation	Pink® Batts Wall R1.5	Pink® Batts Wall R2.0	Polyester R1.5	Report
70 on 90mm plate	154	48 (42)	54 (**50**)	55 (**51**)	54 (**50**)	Day Design 3094-45
90 on 120mm plate	184	50 (43)	55 (**51**)	56 (**53**)	55 (**51**)	Note: Impact Sound Resistant

TSW524

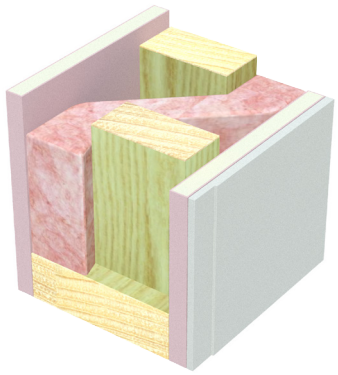

- 1 layer of 16mm **fire**shield
- Staggered timber studs at maximum 600mm centres (300mm staggered)
- 1 layer of 16mm **fire**shield plus 1 layer of 6mm Villaboard™

fireshield can be substituted with **multi**shield or **tru**rock
The order of wall linings can be reversed

Fire Resistance Level

-/90/90 and **60/60/60** rated from both sides

Reports FAR 3348

Stud Depth (mm)	Wall Width (mm)	Sound Insulation Rw (Rw + Ctr)				
		No insulation	Pink® Batts Wall R1.5	Pink® Batts Wall R2.0	Polyester R1.5	Report
70 on 90mm plate	128	43 (38)	50 (44)	52 (46)	50 (44)	Day Design 3094-45
90 on 120mm plate	158	45 (39)	51 (46)	52 (47)	51 (46)	Note: Impact Sound Resistant

TSW526

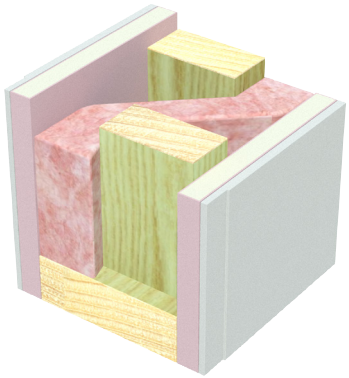

- 1 layer of 16mm **fire**shield plus 1 layer of 6mm Villaboard™
- Staggered timber studs at maximum 600mm centres (300mm staggered)
- 1 layer of 16mm **fire**shield plus 1 layer of 6mm Villaboard™

fireshield can be substituted with **multi**shield or **tru**rock
The order of wall linings can be reversed

Fire Resistance Level

-/120/120 and **60/60/60** rated from both sides

Reports FAR 3348

Stud Depth (mm)	Wall Width (mm)	Sound Insulation Rw (Rw + Ctr)				
		No insulation	Pink® Batts Wall R1.5	Pink® Batts Wall R2.0	Polyester R1.5	Report
70 on 90mm plate	134	47 (40)	54 (48)	55 (**50**)	54 (48)	Day Design 3094-45
90 on 120mm plate	164	48 (41)	54 (**50**)	56 (**51**)	54 (**50**)	Note: Impact Sound Resistant

General Requirements

	Non-Fire Rated	Fire Rated
Install control joints in timber framed walls: > With plasterboard at 12m maximum intervals > With fibre cement at 7.2m maximum intervals > With tiles at 4.2m maximum intervals (plasterboard or fibre cement) > At all control joints in the structure > At any change in the substrate > At the floor line in stairwells. Cover the gap with a moulding fastened to one edge.	✓	✓
Only joint the face layer. As a minimum, use paper tape with any Siniat jointing compound applied in one or two coats to the thickness of two coats. Alternatively, use **bindex** fire and acoustic sealant according to the Product Data Sheet.		✓
Use approved fire rated penetration details. Fire penetrations may require fire collars or other devices to maintain fire performance.		✓
Use **bindex** fire and acoustic sealant on all gaps and around perimeter.		✓
Attach all fixtures to studs or purpose installed noggings/blocking. Wall anchors must not be fixed only to the plasterboard of fire rated walls.		✓

For acceptable modifications or variations to fire rated systems, refer to Section 2.3 fire Resistance

Framing

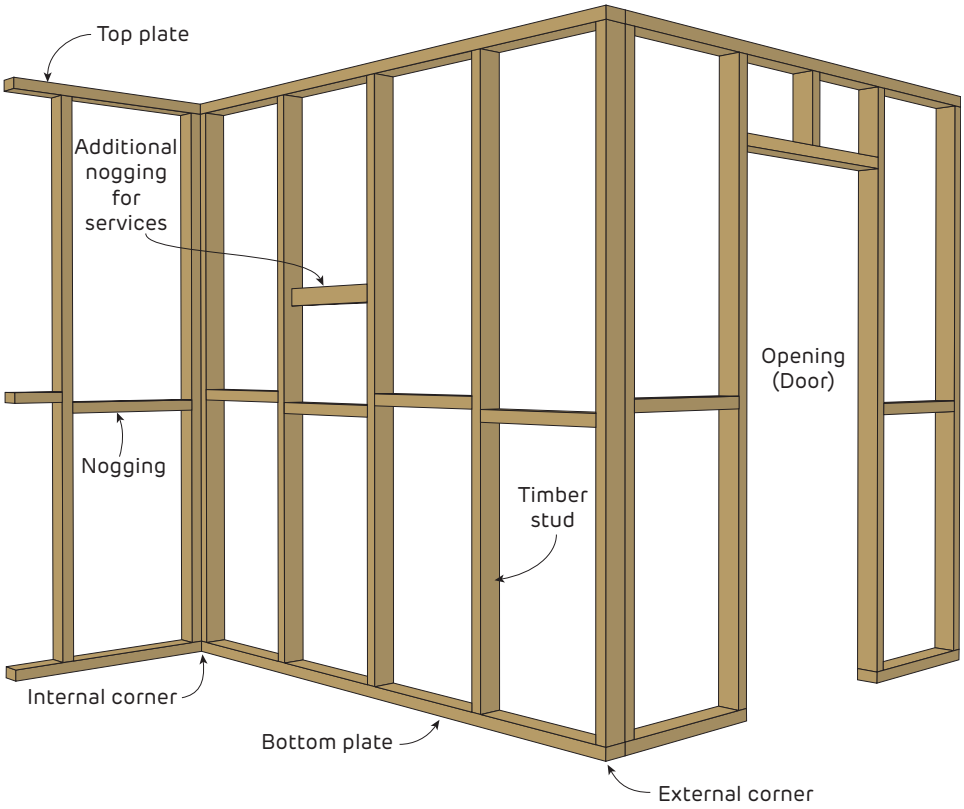

FIGURE 1 Internal Timber Frame Wall Layout

	Non-Fire Rated	Fire Rated
Framing members as per framing table or structural design up to 600mm maximum.	✓	✓
Use minimum 70x45mm or 90x35mm timber studs for load bearing walls.		✓

> Noggings are permitted to assist the fixing of services.
> Plumbing and electrical services must not protrude beyond the face of the studs.

Table 1 Wall Furring Channel Span Table

Refer to Section 2.3 for assistance determining the relevant wind pressures for a specific project.

Furring Channels at 600mm maximum centres					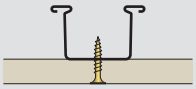	
Wind Region	Ultimate W_u (kPa)	Serviceability W_s (kPa) Deflection limited to Span/360	18mm Furring Channel (FC18)		28mm Furring Channel (FC28)	
			Span (mm)	Anchor Pull-out and Clip Demand (kN)	Span (mm)	Anchor Pull-out and Clip Demand (kN)
REGION A	0.39	0.25	800	0.24	1140	0.32
	0.47	0.3	750	0.27	1070	0.38
	0.54	0.35	710	0.29	1030	0.42
REGION B	0.59	0.25	740	0.33	1010	0.45
	0.71	0.3	710	0.38	960	0.51
	0.83	0.35	680	0.42	920	0.57

1. Table based upon self weight and lateral pressures, intended for internal use only. Other loads such as shelf loads, loads from ceilings, or live loads have not been considered.
2. Table refers to Siniat Furring Channel of Base Metal Thickness (BMT) 0.42mm of grade G550 steel with Zincalume™ AM150 corrosion protection.
3. Framing calculations based upon 2-or-more spans and designed in accordance with *AS/NZS 4600:2018 Cold Formed Steel Structures.*
4. Wind pressures determined in accordance with *AS/NZS 1170.2 Wind Actions.*
5. Connections to clips must be checked with the *Wall Clip Capacity Table.*
6. Ultimate Limit State Load Case 1: 1.2G + Wu
7. Serviceability Limit State Load Case 1: G + Ws, with deflection limited to Span/360.
8. When furring channel track is used, the first anchor must be 600mm from the track. If no furring channel track is used, then the first anchor must be 150mm maximum from ends. Refer to Construction Details.
9. Anchors for head and base tracks at 600mm maximum centres and 100mm maximum from ends with minimum 0.5 kN shear capacity.
10. Clips may need to be spaced at closer intervals for impact applications.
11. Furring channels cannot be spliced, therefore the maximum wall height using furring channels is 6.0m. Maximum production lengths available are 6.0m.
12. The nominated lateral pressures and deflection limits must be checked for suitability for a specific project.

Siniat Internal Wind Load Calculator

Refer to Section 2.3 for assistance determining the relevant internal wind pressures for a specific project. Or use the Siniat Internal Wind Load Calculator by clicking on the link or by using your phone's camera on the QR code.

Plasterboard Layout

	Non-Fire Rated	Fire Rated
Vertical joints must be 200mm minimum from the edge of any opening such as windows and doorways to minimise cracking at the joints.	✓	✓
Horizontal Layout		
Stagger butt joints in single layer systems by 300mm minimum on adjoining sheets and on opposite sides of the wall.	✓	✓
Stagger butt joints in multilayer systems by 300mm minimum on adjoining sheets and between layers.	✓	✓
First layer butt joints must be backed by a stud or back-blocked.	✓	✓
Stagger recessed edges by 300mm minimum between layers.	✓	✓
Stagger recessed edges in single layer systems by 300mm minimum on opposite sides of the wall or alternatively, back by a nogging.		✓
Vertical Layout		
Stagger butt joints in single layer systems by 300mm minimum on adjoining sheets and on opposite sides of the wall.	✓	✓
Stagger butt joints by 300mm minimum on adjoining sheets and between layers.	✓	✓
First layer butt joints must be backed by a nogging or back-blocked.	✓	
First layer butt joints must be backed by a nogging.		✓
Stagger recessed edges by 300mm minimum between layers.	✓	✓
Stagger recessed edges by 300mm minimum on opposite sides of the wall for single layer systems	✓	✓

> Install plasterboard sheets horizontally when practical reduce the effect of glancing light.

> Minimise butt joints by using long sheets.

Plasterboard Fixing

	Non-Fire Rated	Fire Rated
Drive screws to just below the sheet surface, taking care not to break the paper linerboard. For over-driven screws, install another screw 20mm away. Leave or remove the over-driven screw and patch.	✓	✓
Laminating screws can be used to fix butt joints in the second and third layer.	✓	✓
Fastener and Adhesive Method		
Apply masta**grip** Stud Adhesive after the frame is clean, dry, and free from grease, dust and other contaminants.	✓	
Apply masta**grip** daubs 200mm minimum from screws and plasterboard edges.	✓	
Fastener Only Method		
Use the 'Screw Only Method' in tiled or fire rated areas. Stud adhesive is not permitted.	✓	✓

The 'Fastener and Adhesive Method' is recommended for non-fire rated applications. masta**grip** will:

- Minimise screw popping
- Reduce the number of screw heads that may show in glancing light
- Assist in compensating for frame irregularities
- Reduce rattle noise when applied to bracing straps.

Fastener Type and Minimum Size for the Installation of Plasterboard to Softwood Timber

Plasterboard Thickness	1st Layer	2nd Layer	3rd Layer
6.5mm	2.8 x 30mm galvanised nail or 2.8 x 25mm ring shank nail or 6g x 25mm screw	2.8 x 40mm galvanised nail or 2.8 x 30mm ring shank nail or 6g x 32mm screw	-
10mm	2.8 x 40mm galvanised nail or 2.8 x 30mm ring shank nail or 6g x 32mm screw	2.8 x 50mm galvanised nail or 6g x 41mm screw *	-
13mm	2.8 x 40mm galvanised nail or 2.8 x 30mm ring shank nail or 6g x 41mm screw	2.8 x 50mm galvanised nail or 7g x 50mm screw *	3.75 x 75mm galvanised nail or 8g x 65mm screw *
16mm	2.8 x 50mm galvanised nail or 7g x 45mm screw	3.15 x 65mm galvanised nail or 8g x 60mm screw *	3.75 x 75mm galvanised nail or 8g x 75mm screw *

*10g x 38mm Laminating screws may be used as detailed in installation diagrams.
Also refer to the Siniat Plasterboard installation Guide for minimum screw lengths for non-fire rated walls.

FIGURE 2 Internal Non-Fire Rated - 1 Layer Horizontal
Fastener and Adhesive Method

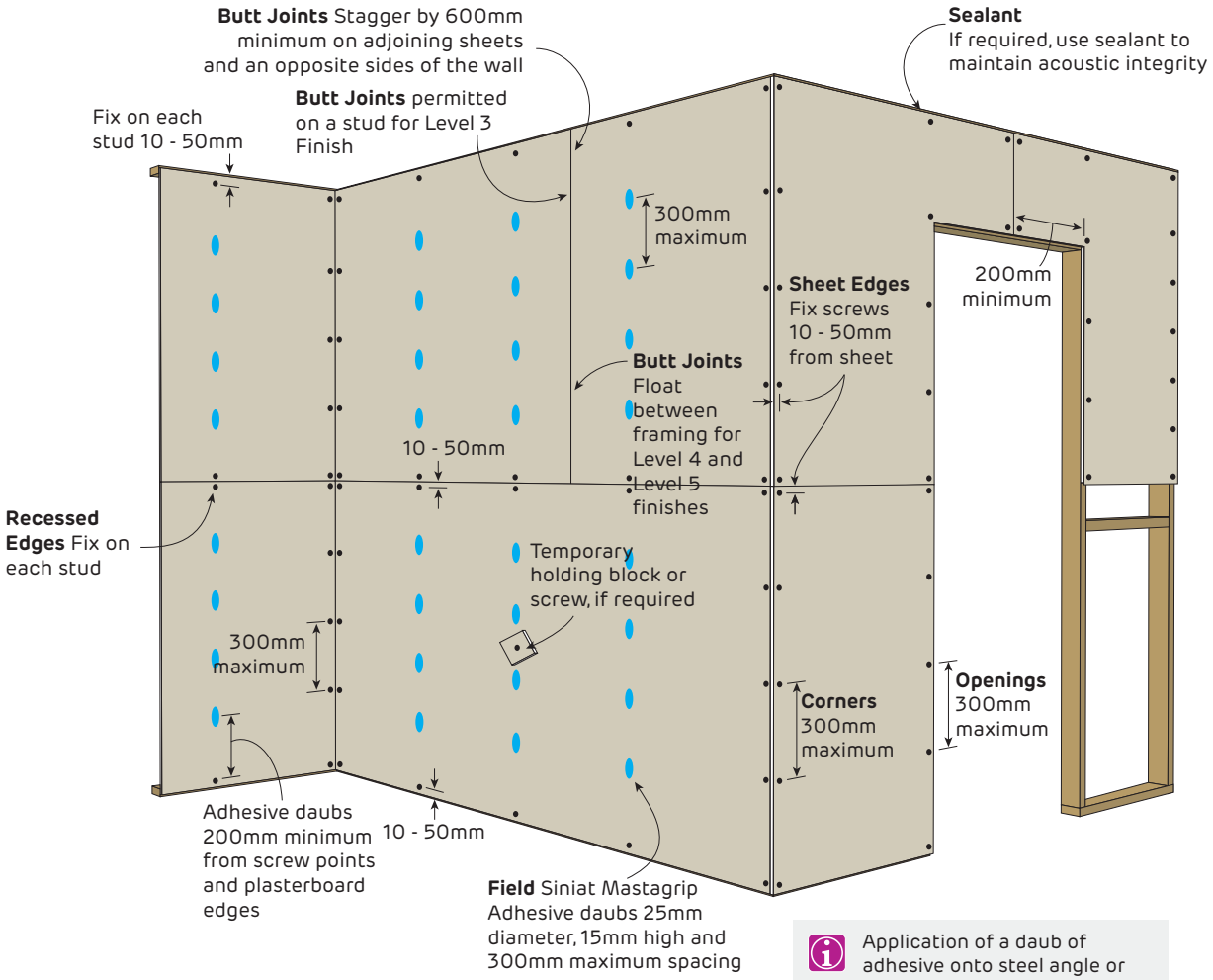

Application of a daub of adhesive onto steel angle or strap bracing between framing members will minimise the risk of the bracing rattling against the back of

Fixing Pattern Table

Sheet Width	Fixing Pattern
600mm	F A A F
900mm	F A A A F
1200mm	F A A A A F
1350mm	F A A A A A F
1400mm	F A A A A A F

F = Screw or nail
A = Adhesive daub

Maximum Ultimate Limit State Wind Load Table (kPa)

Plasterboard Thickness	Maximum Wall Stud Spacing			
	600mm	450mm	400mm	300mm
10mm	0.95	1.30	1.45	1.95
13mm	1.10	1.45	1.65	2.20
16mm	1.10	1.45	1.65	2.20

1. Calculations do not include the framing which must be independently designed to suit the desired loads.
2. If higher internal wind pressures are expected, please contact Siniat for specific design.

FIGURE 3 Internal Non-Fire Rated - 1 Layer Horizontal
Fastener Only Method

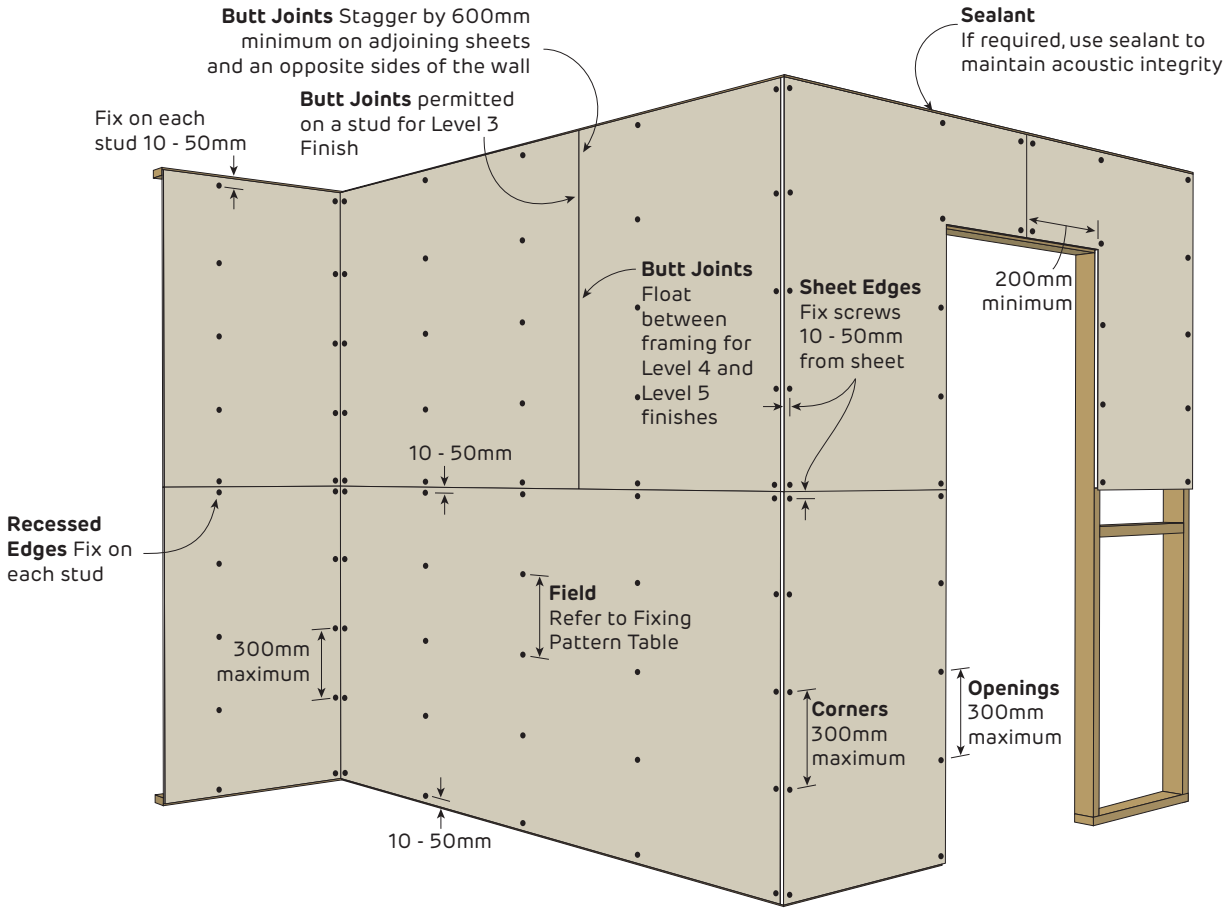

Fixing Pattern Table

Sheet Width	Fixing Pattern	Nail Fixing Pattern	Double Nail Fixing Pattern
600mm	S S S (3)	N N N N (4)	N Dn N (3)
900mm	S S S S (4)	N N N N N (5)	N Dn Dn N (4)
1200mm	S S S S S (5)	N N N N N N (6)	N Dn Dn Dn N (5)
1350mm	S S S S S S (6)	N N N N N N N (7)	N Dn Dn Dn Dn N (6)
1400mm	S S S S S S (6)	N N N N N N N (7)	N Dn Dn Dn Dn N (6)

S = Screw
N = Nail
Dn = Double nail

Maximum Ultimate Limit State Wind Load Table (kPa)

Plasterboard Thickness	Maximum Wall Stud Spacing			
	600mm	450mm	400mm	300mm
10mm	0.75	1.05	1.15	1.55
13mm	0.85	1.15	1.30	1.75

1. Calculations do not include the framing which must be independently designed to suit the desired loads.
2. If higher internal wind pressures are expected, please contact Siniat for specific design.

FIGURE 4 Internal Non-Fire Rated - 2 Layers Horizontal + Horizontal
Fastener Only Method

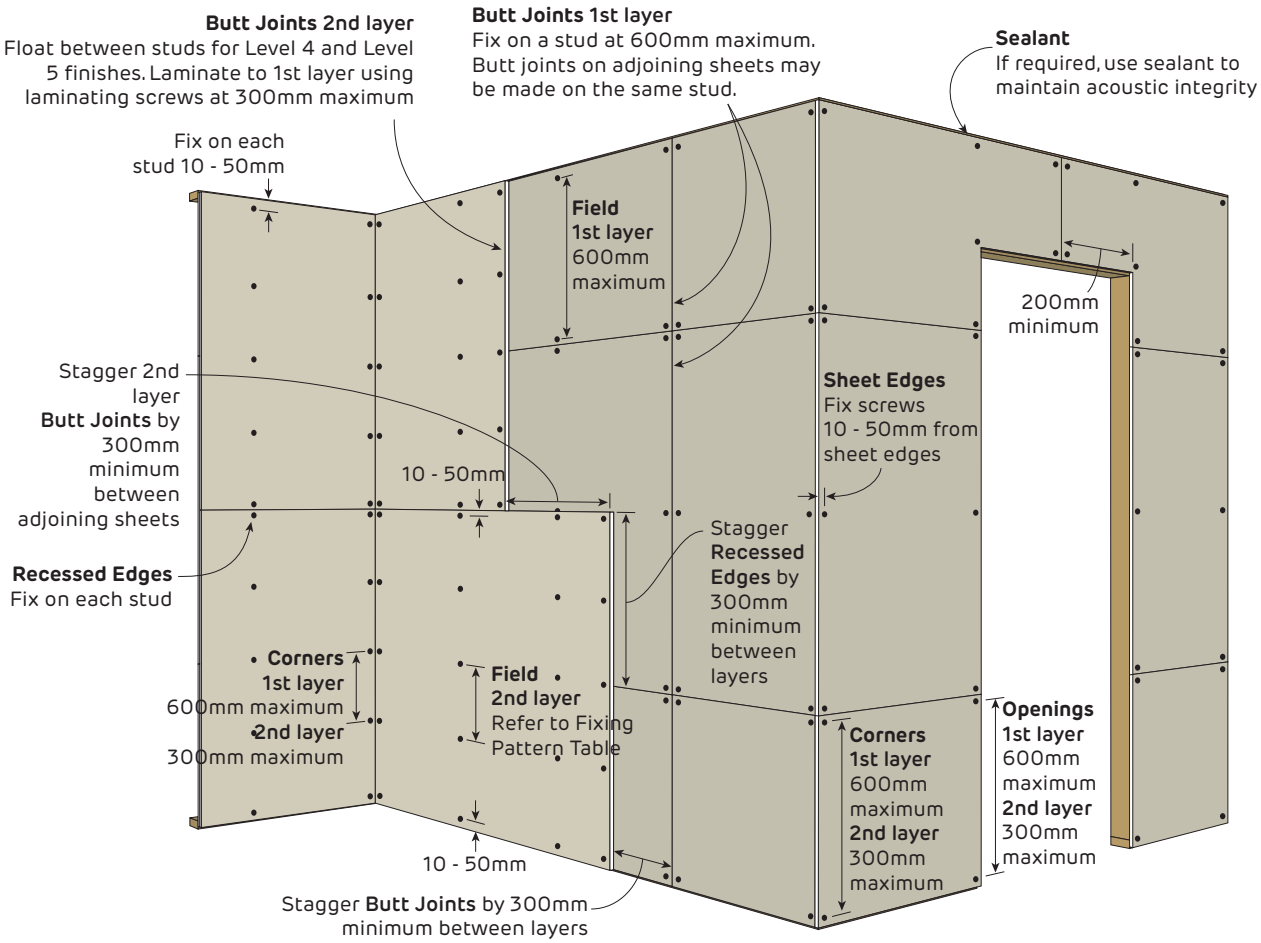

Fixing Pattern Table for 2nd Layer

Sheet Width	Fixing Pattern	Nail Fixing Pattern	Double Nail Fixing Pattern
600mm	S S S (3)	N N N N (4)	N Dn N (3)
900mm	S S S S (4)	N N N N N (5)	N Dn Dn N (4)
1200mm	S S S S S (5)	N N N N N N (6)	N Dn Dn Dn N (5)
1350mm	S S S S S S (6)	N N N N N N N (7)	N Dn Dn Dn Dn N (6)
1400mm	S S S S S S (6)	N N N N N N N (7)	N Dn Dn Dn Dn N (6)

S = Screw
N = Nail
Dn = Double nail

Maximum Ultimate Limit State Wind Load Table (kPa)

Plasterboard Thickness	Maximum Wall Stud Spacing			
	600mm	450mm	400mm	300mm
10mm	0.75	1.05	1.15	1.55
13mm	0.85	1.15	1.30	1.75

1. Calculations do not include the framing which must be independently designed to suit the desired loads.
2. If higher internal wind pressures are expected, please contact Siniat for specific design.

FIGURE 5 Internal Non-Fire Rated - 1 Layer Horizontal
Screw and Adhesive Method over furring channels

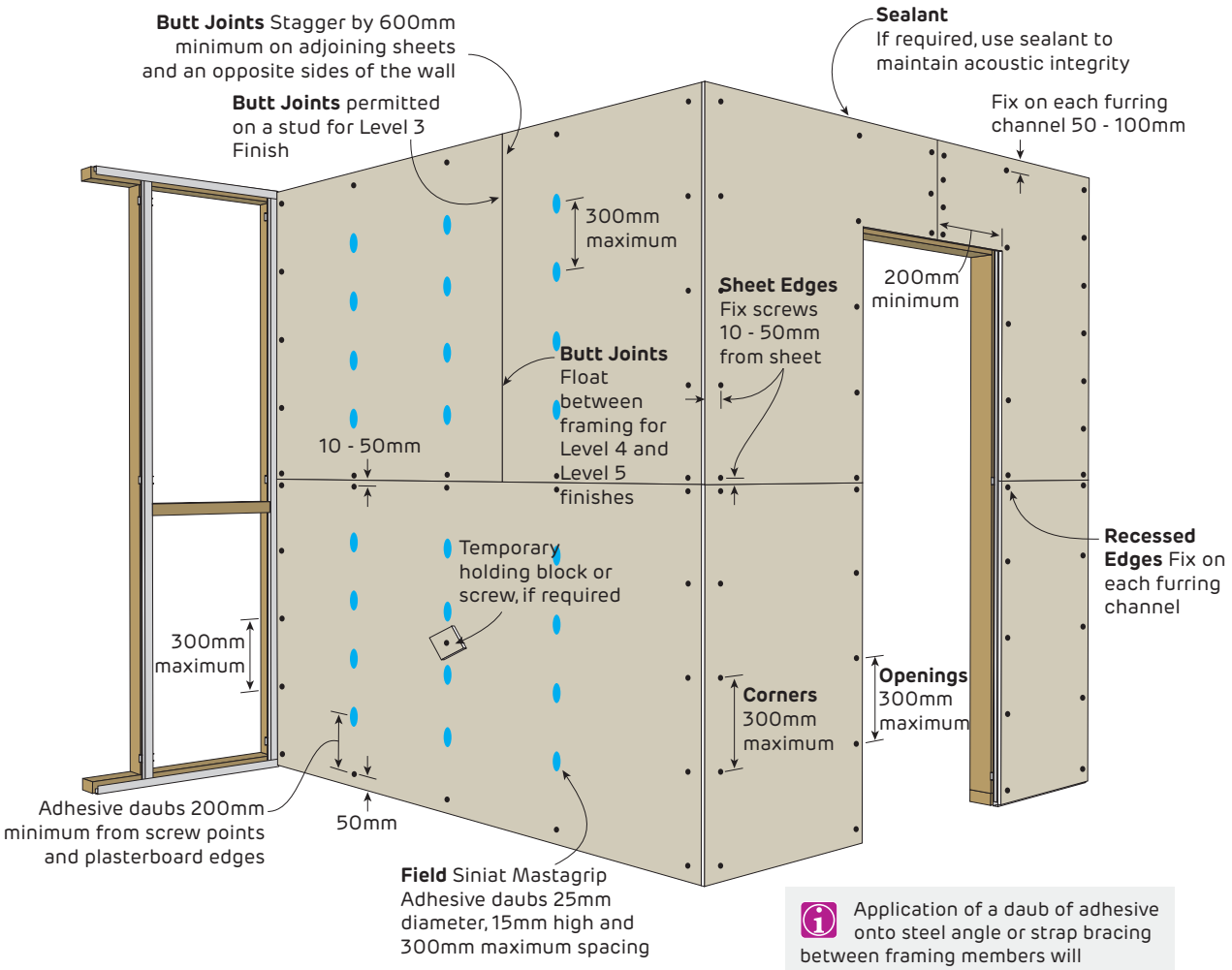

Application of a daub of adhesive onto steel angle or strap bracing between framing members will minimise the risk of the bracing rattling against the back of the gypsum linings.

Fixing Pattern Table

Sheet Width	Fixing Pattern
600mm	S A A S
900mm	S A A A S
1200mm	S A A A A S
1350mm	S A A A A A S
1400mm	S A A A A A S

S = Screw
A = Adhesive daub

Maximum Ultimate Limit State Wind Load Table (kPa)

Plasterboard Thickness	Maximum Wall Stud Spacing			
	600mm	450mm	400mm	300mm
10mm	0.95	1.30	1.45	1.95
13mm	1.10	1.45	1.65	2.20

1. Calculations do not include the framing which must be independently designed to suit the desired loads.
2. If higher internal wind pressures are expected, please contact Siniat for specific design.

FIGURE 6 Fire Rated 1 Layer - Horizontal
Fastener Only Method

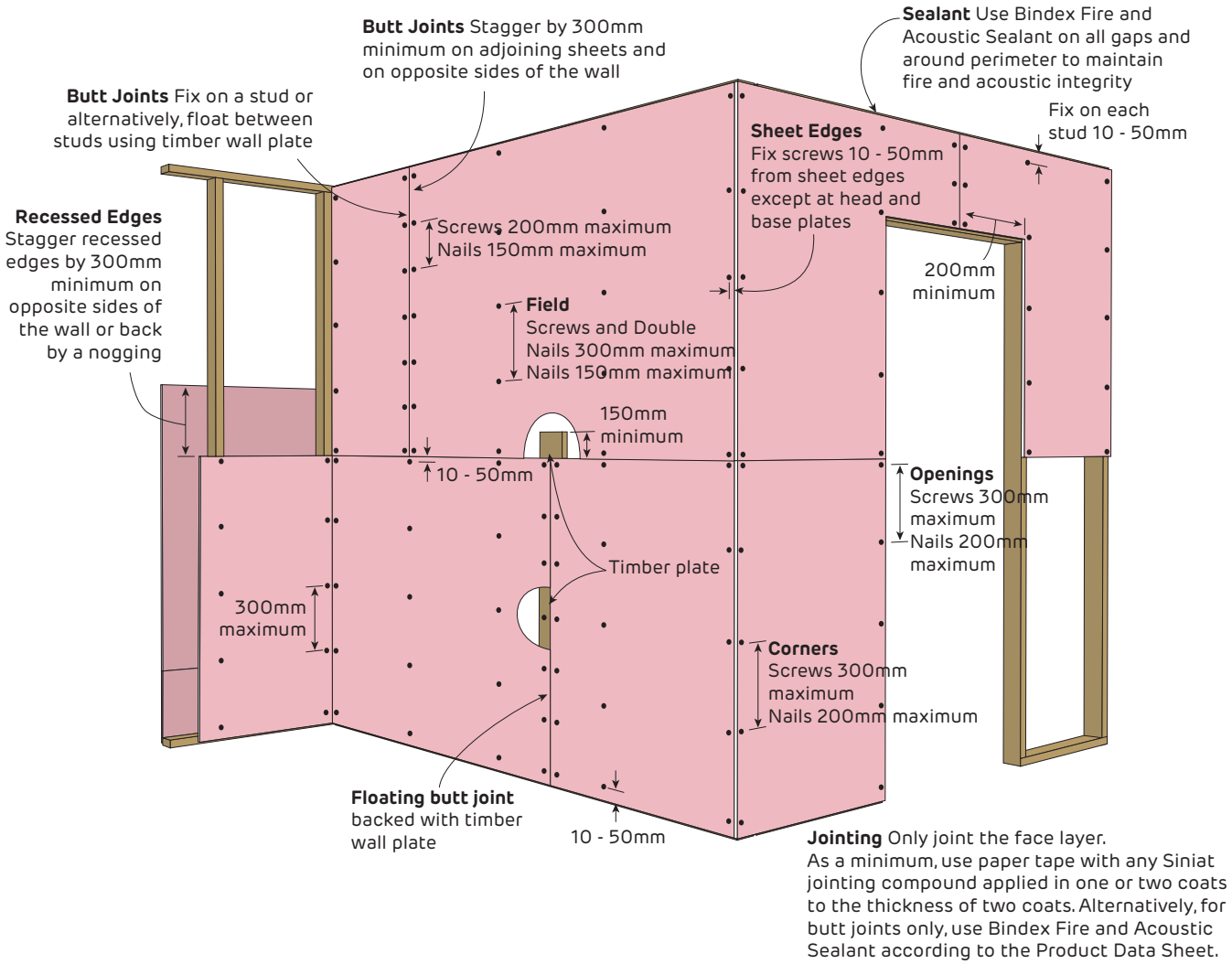

Jointing Only joint the face layer. As a minimum, use paper tape with any Siniat jointing compound applied in one or two coats to the thickness of two coats. Alternatively, for butt joints only, use Bindex Fire and Acoustic Sealant according to the Product Data Sheet.

Fixing Pattern Table

Sheet Width	Fixing Pattern	Nail Fixing Pattern	Double Nail Fixing Pattern
600mm	S S S (3)	N N N N N (5)	N Dn N (3)
900mm	S S S S (4)	N N N N N N N (7)	N Dn Dn N (4)
1200mm	S S S S S (5)	N N N N N N N N N (9)	N Dn Dn Dn N (5)
1350mm	S S S S S S (6)	N N N N N N N N N N (10)	N Dn Dn Dn Dn N (6)
1400mm	S S S S S S (6)	N N N N N N N N N N N (11)	N Dn Dn Dn Dn N (6)

S = Screw
N = Nail
Dn = Double nail

Maximum Ultimate Limit State Wind Load Table (kPa)

Plasterboard Thickness	Maximum Wall Stud Spacing			
	600mm	450mm	400mm	300mm
13mm	0.85	1.15	1.30	1.75
16mm	0.85	1.15	1.30	1.75

1. Calculations do not include the framing which must be independently designed to suit the desired loads.
2. If higher internal wind pressures are expected, please contact Siniat for specific design.

FIGURE 7 Fire Rated 2 Layers - Horizontal + Horizontal
Screw Only Method

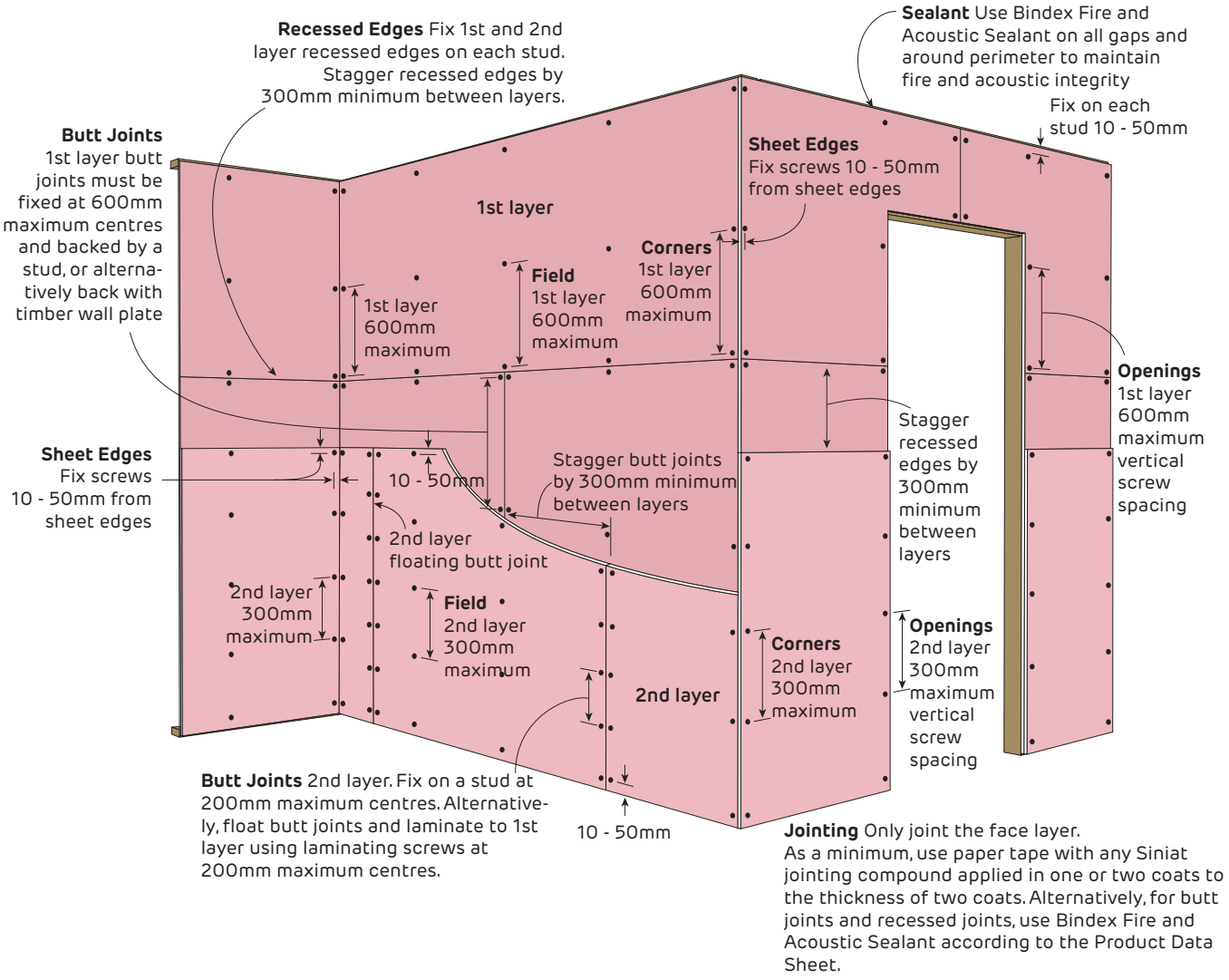

Fixing Pattern Table for 2nd Layer

Sheet Width	Fixing Pattern
600mm	S S S (3)
900mm	S S S S (4)
1200mm	S S S S S (5)
1350mm	S S S S S S (6)
1400mm	S S S S S S (6)

S = Screw

Maximum Ultimate Limit State Wind Load Table (kPa)

Plasterboard Thickness	Maximum Wall Stud Spacing			
	600mm	450mm	400mm	300mm
13mm	0.85	1.15	1.30	1.75
16mm	0.85	1.15	1.30	1.75

1. Calculations do not include the framing which must be independently designed to suit the desired loads.
2. If higher internal wind pressures are expected, please contact Siniat for specific design.

FIGURE 8 Fire Rated 3 Layers - Horizontal + Horizontal + Horizontal
Screw Only Method

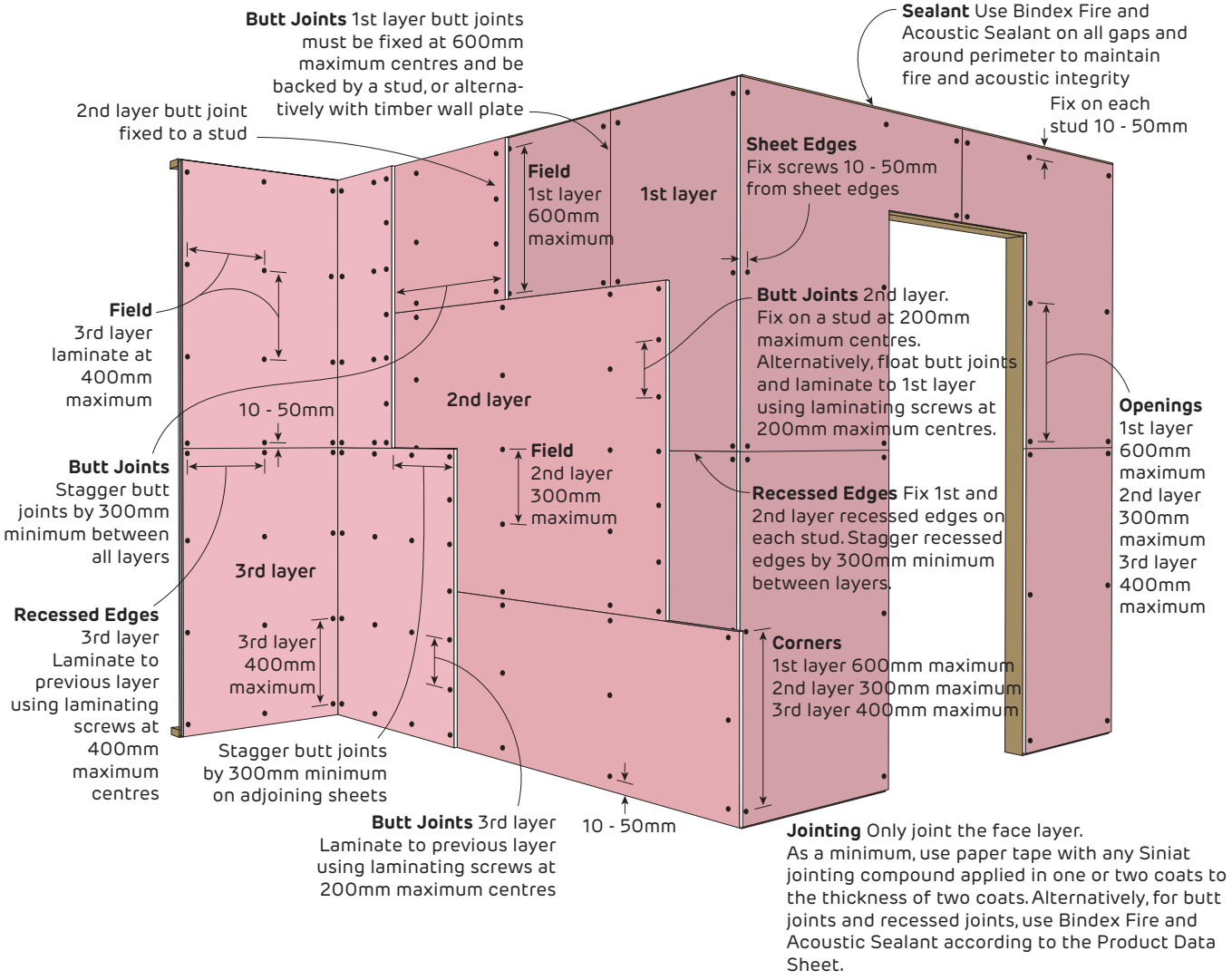

Fixing Pattern Table for 2nd Layer

Sheet Width	Fixing Pattern
600mm	S S S (3)
900mm	S S S S (4)
1200mm	S S S S S (5)
1350mm	S S S S S S (6)
1400mm	S S S S S S (6)

S = Screw

Maximum Ultimate Limit State Wind Load Table (kPa)

Plasterboard Thickness	Maximum Wall Stud Spacing			
	600mm	450mm	400mm	300mm
13mm	0.85	1.15	1.30	1.75
16mm	0.85	1.15	1.30	1.75

1. Calculations do not include the framing which must be independently designed to suit the desired loads.
2. If higher internal wind pressures are expected, please contact Siniat for specific design.

FIGURE 9 Fire Rated - 1 Layer Horizontal
Screw Only Method over furring channels

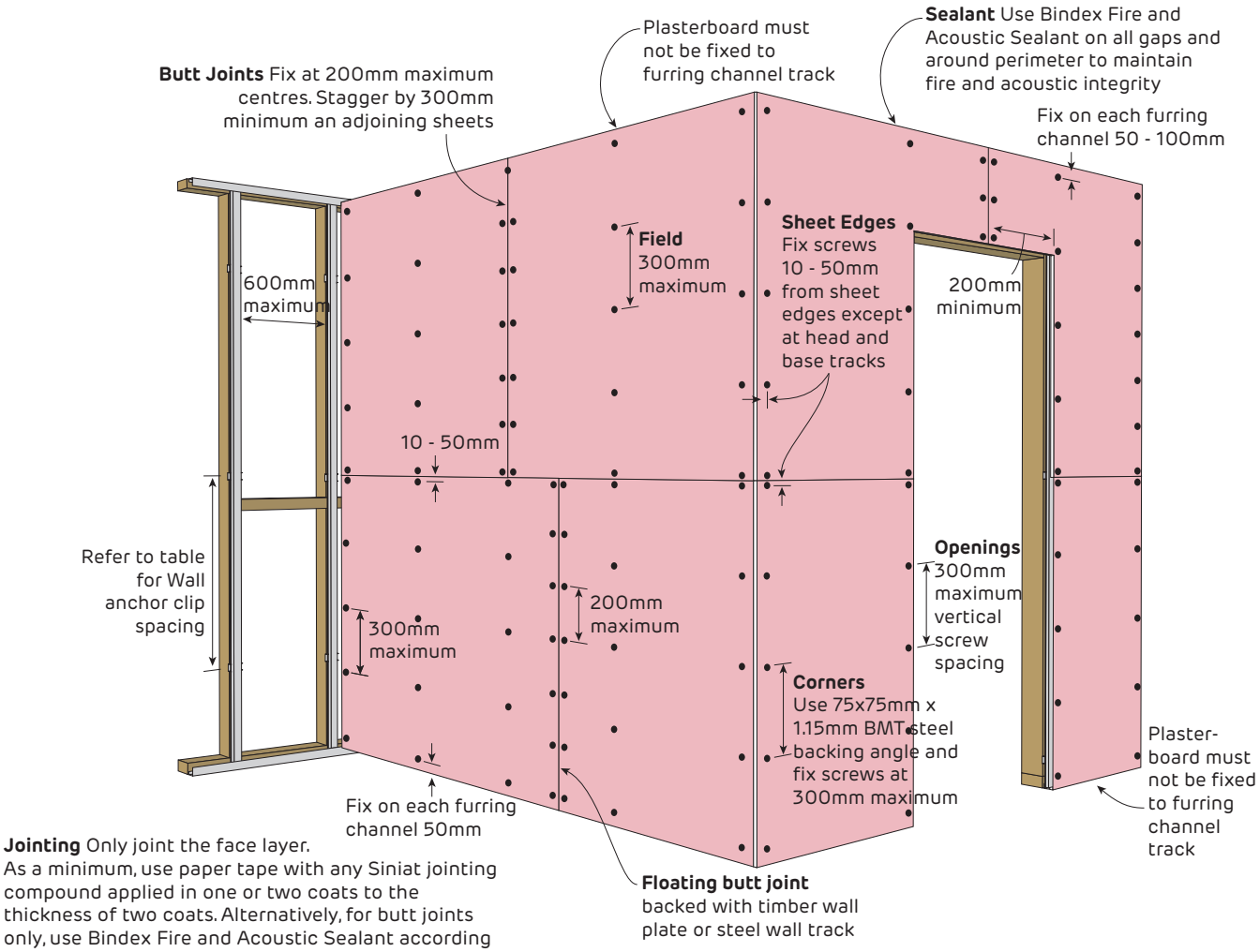

Jointing Only joint the face layer.
As a minimum, use paper tape with any Siniat jointing compound applied in one or two coats to the thickness of two coats. Alternatively, for butt joints only, use Bindex Fire and Acoustic Sealant according to the Product Data Sheet.

Fixing Pattern Table

Sheet Width	Fixing Pattern
600mm	S S S (3)
900mm	S S S S (4)
1200mm	S S S S S (5)
1350mm	S S S S S S (6)
1400mm	S S S S S S (6)

S = Screw

Maximum Ultimate Limit State Wind Load Table (kPa)

Plasterboard Thickness	Maximum Wall Stud Spacing			
	600mm	450mm	400mm	300mm
13mm	0.85	1.15	1.30	1.75
16mm	0.85	1.15	1.30	1.75

1. Calculations do not include the framing which must be independently designed to suit the desired loads.
2. If higher internal wind pressures are expected, please contact Siniat for specific design.

FIGURE 10 Fire Rated 2 Layers - Horizontal + Horizontal
Screw Only Method over furring channels

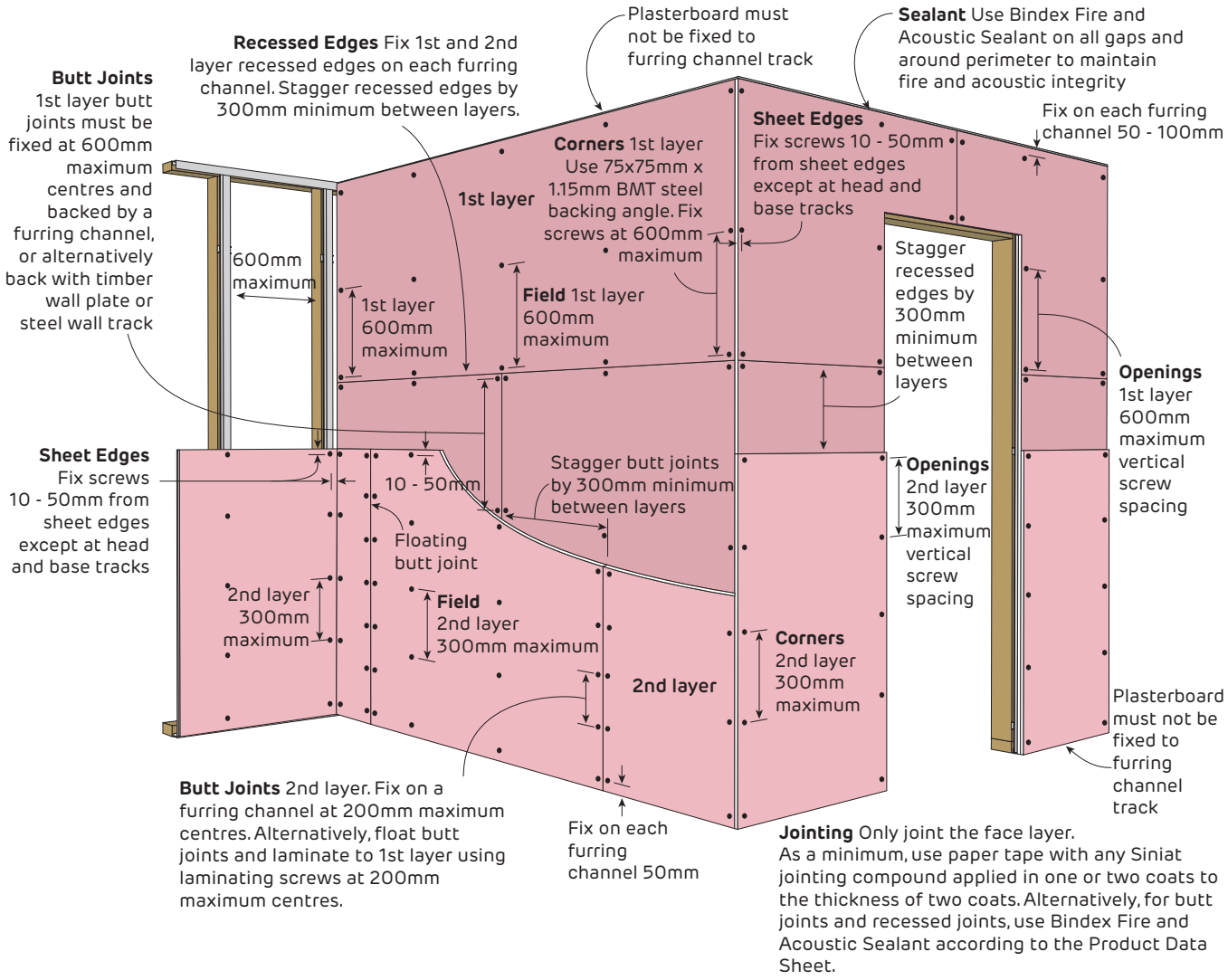

Fixing Pattern Table

Sheet Width	Fixing Pattern
600mm	S S S (3)
900mm	S S S S (4)
1200mm	S S S S S (5)
1350mm	S S S S S S (6)
1400mm	S S S S S S (6)

S = Screw

Maximum Ultimate Limit State Wind Load Table (kPa)

Plasterboard Thickness	Maximum Wall Stud Spacing			
	600mm	450mm	400mm	300mm
13mm	0.85	1.15	1.30	1.75
16mm	0.85	1.15	1.30	1.75

1. Calculations do not include the framing which must be independently designed to suit the desired loads.
2. If higher internal wind pressures are expected, please contact Siniat for specific design.

Non-Fire Rated
Head and Base Details for Timber Stud Walls

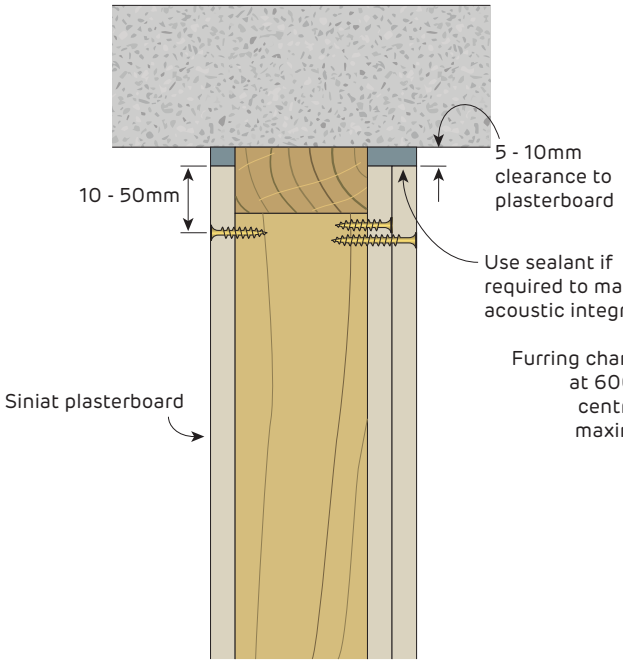

FIGURE 11 Wall Head
Section

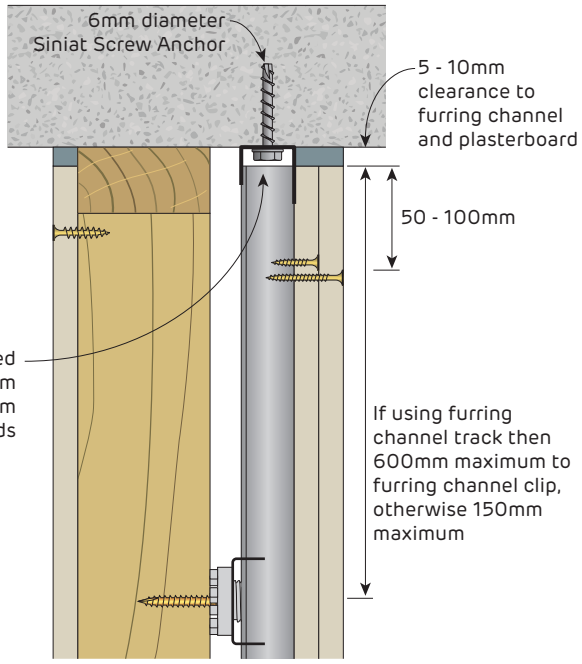

FIGURE 12 Wall Head with Furring Channel
Section

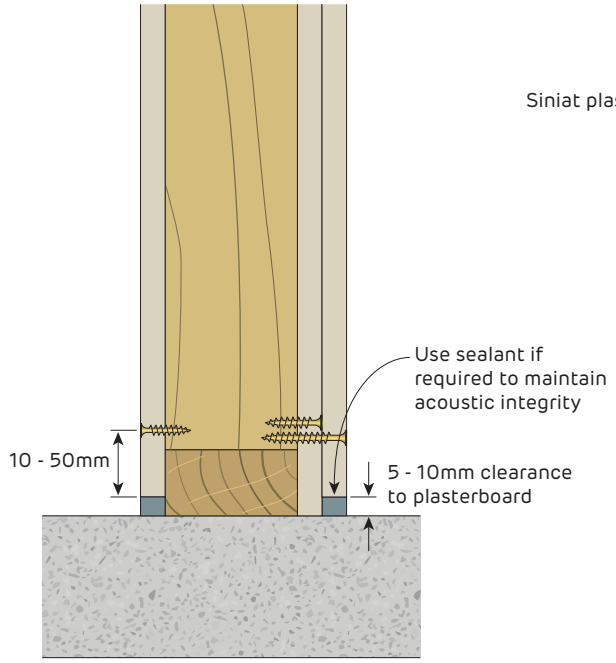

FIGURE 13 Wall Base
Section

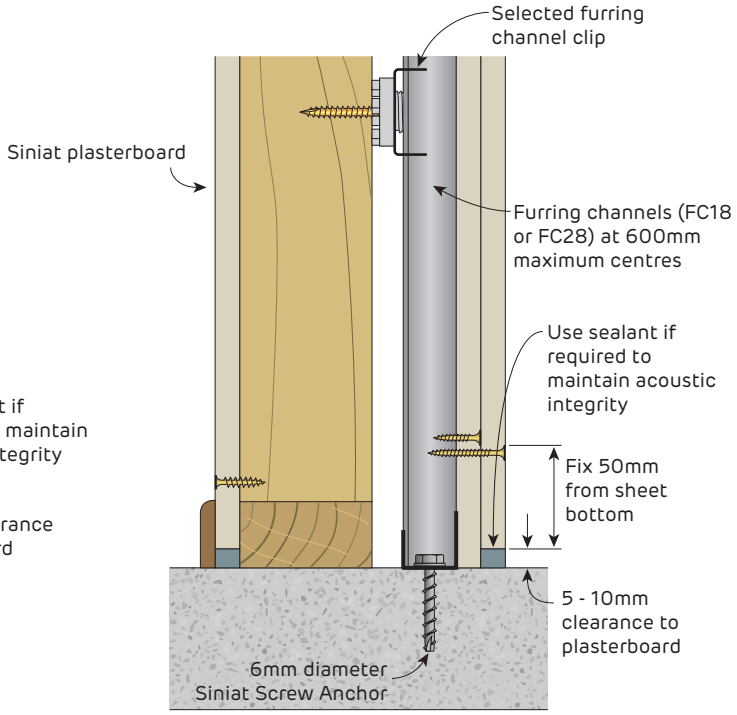

FIGURE 14 Wall Base with Furring Channel
Section

Fire Rated
Head and Base Details for Timber Stud Walls

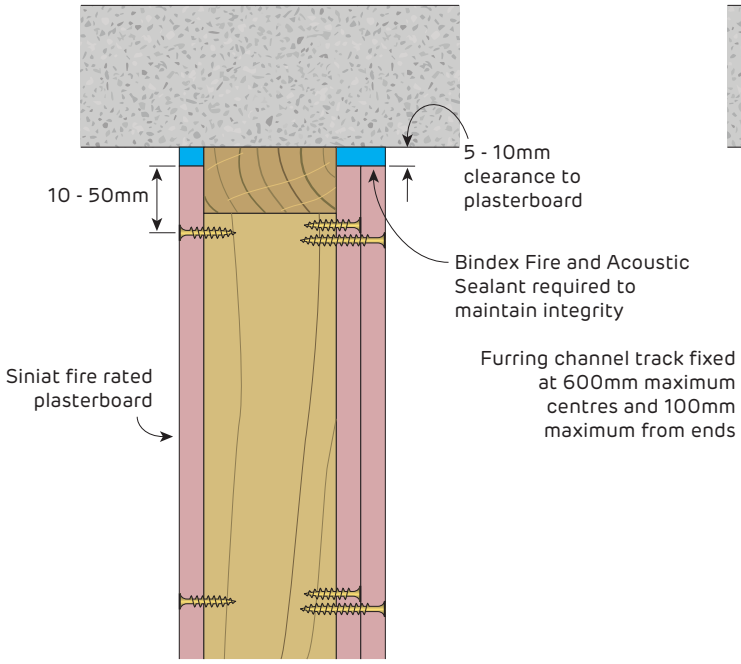

FIGURE 15 Wall Head
Section

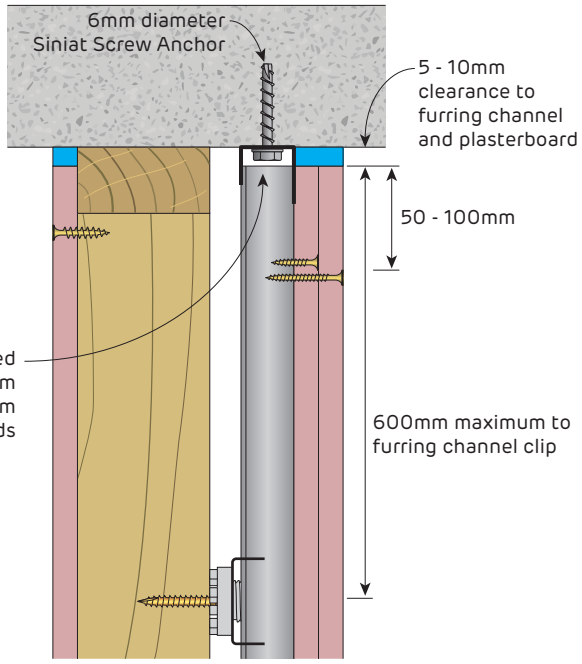

FIGURE 16 Wall Head with Furring Channel
Section

Fill any gaps with Bindex Fire and Acoustic Sealant to maintain integrity

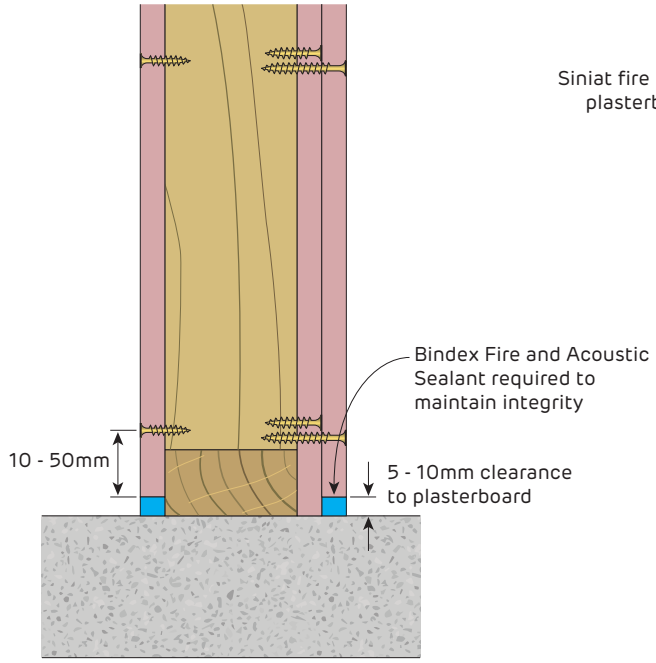

FIGURE 17 Wall Base
Section

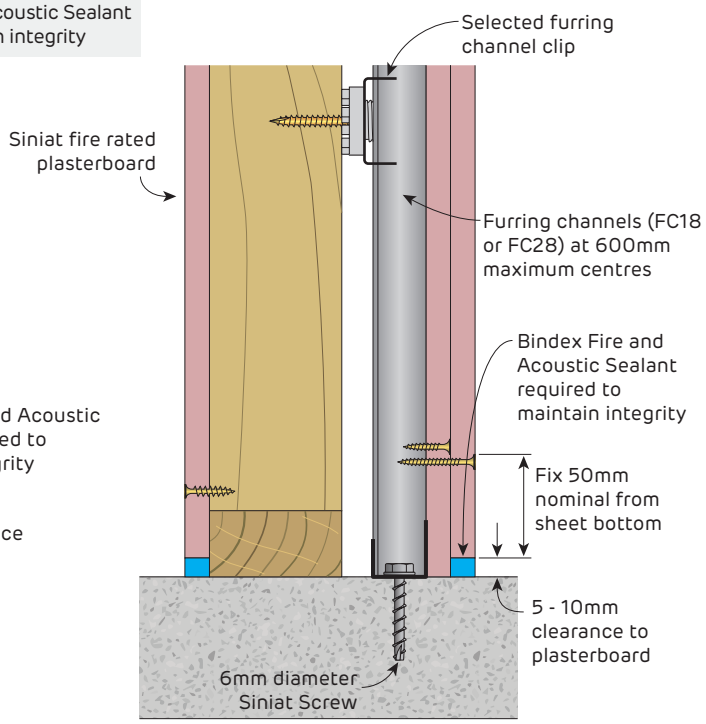

FIGURE 18 Wall Base with Furring Channel
Section

Fire Rated
Internal Stud Walls

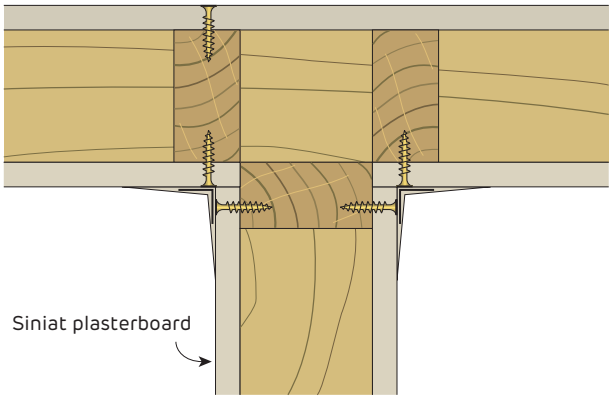

FIGURE 19 Intersecting Wall
Plan

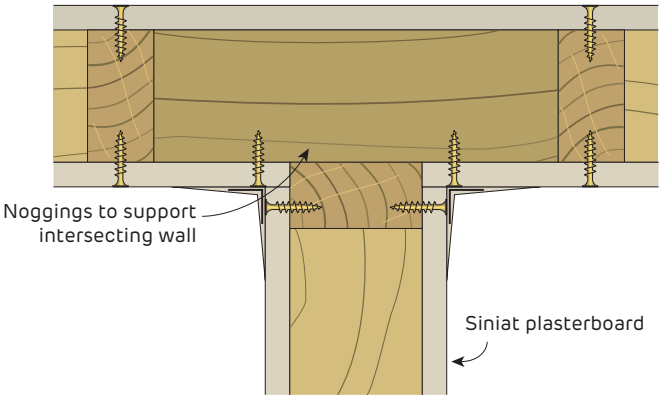

FIGURE 20 Intersecting Wall
Plan

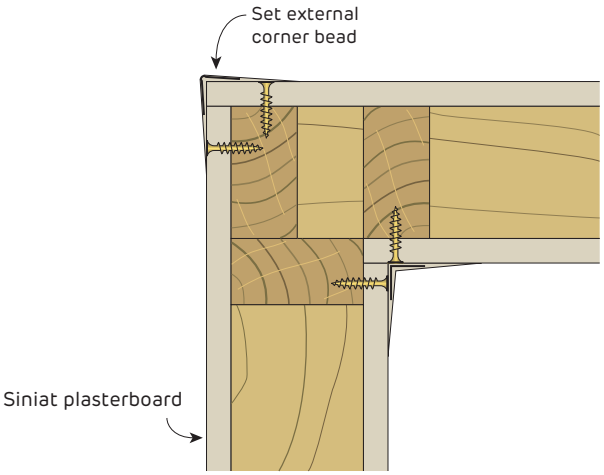

FIGURE 21 Corner
Plan

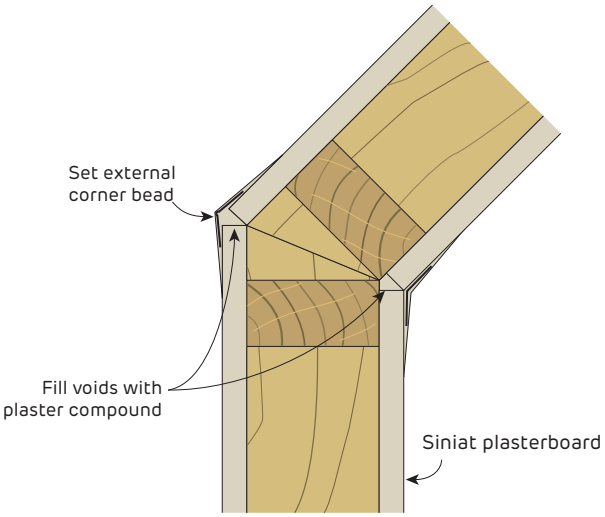

FIGURE 22 Angled Corner
Plan

Fire Rated
Internal Stud Walls

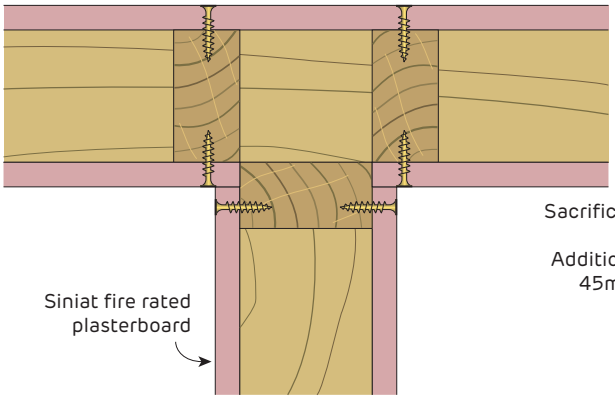

FIGURE 23 Intersecting Wall
Plan

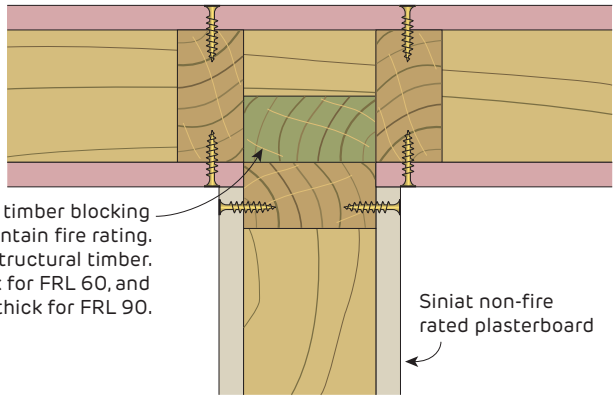

FIGURE 24 Intersecting Wall
Plan

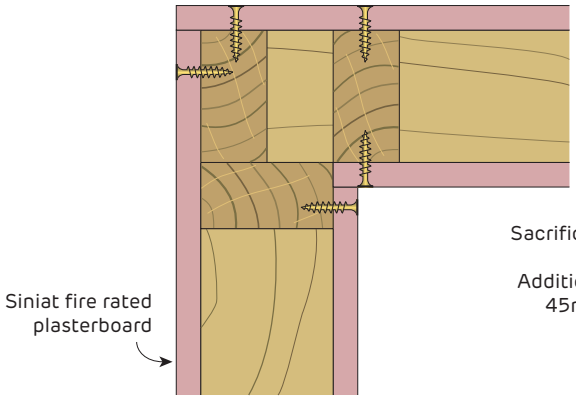

FIGURE 25 Corner
Plan

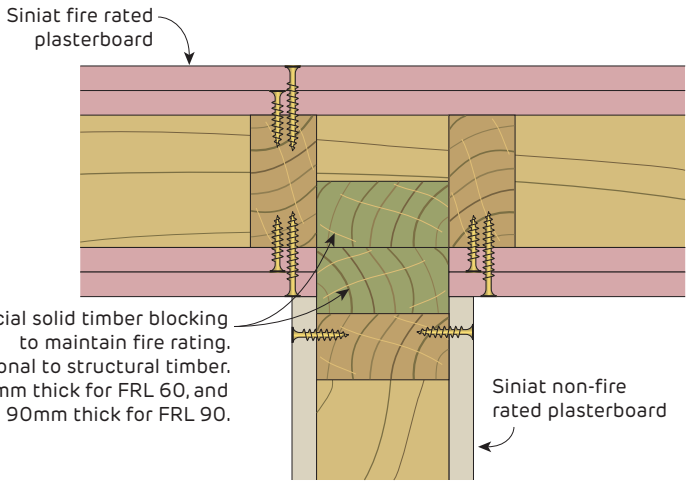

FIGURE 26 Intersecting Wall
Plan

Fill any gaps with Bindex Fire and Acoustic Sealant to maintain integrity

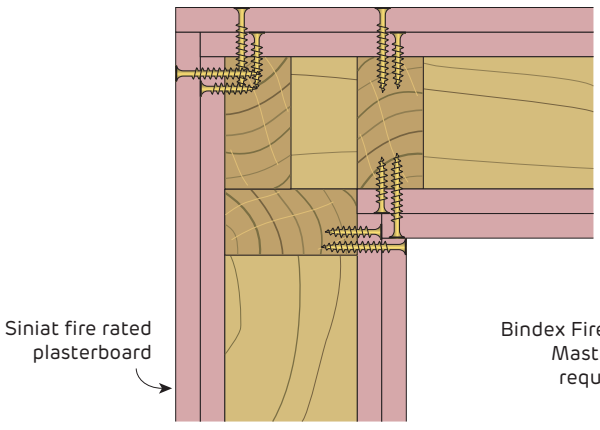

FIGURE 27 Corner
Plan

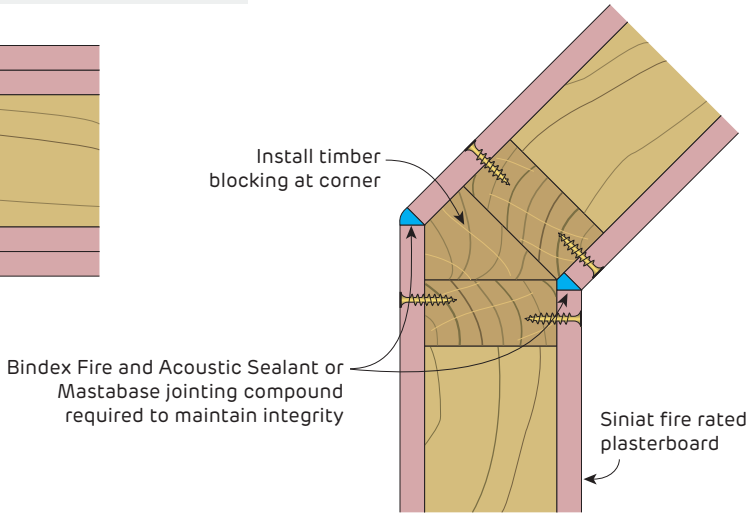

FIGURE 28 Angled Corner
Plan

Fire Rated and Non-Fire Rated
Control Joints in Stud Walls

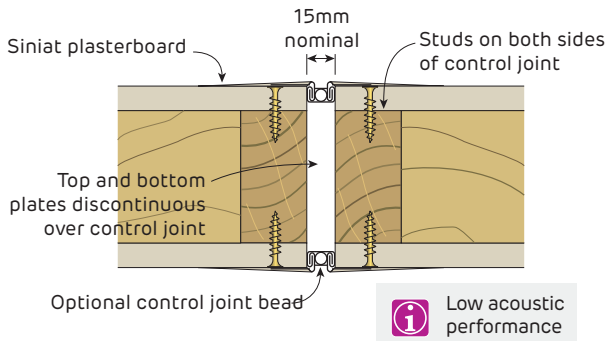

FIGURE 29 Control Joint
Plan

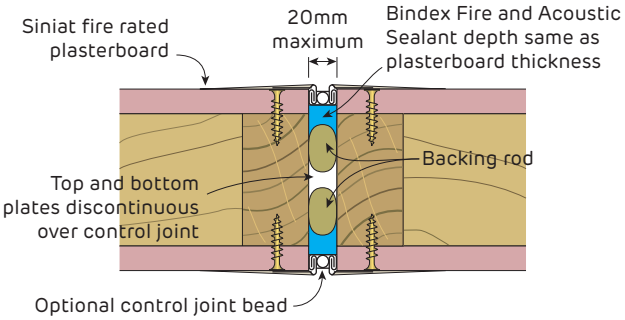

FIGURE 30 Control Joint
Fire rated - 1 layer with control joint bead
Plan

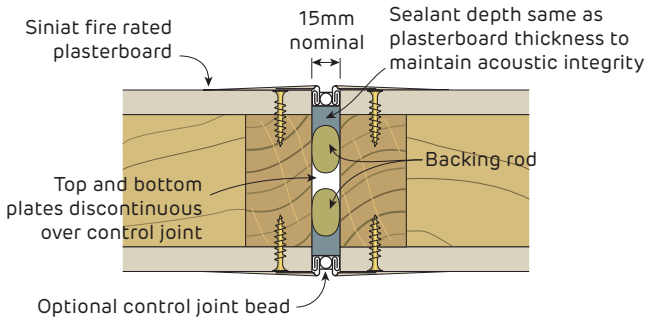

FIGURE 31 Control Joint
Plan

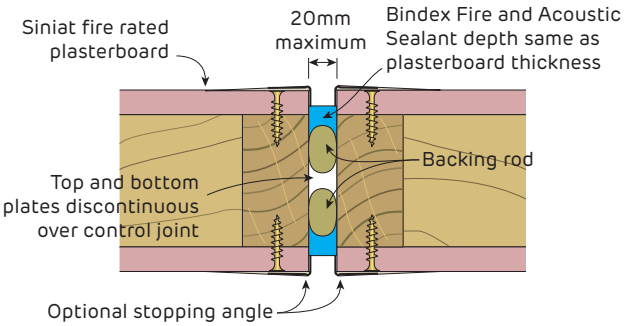

FIGURE 32 Control Joint
Fire rated - 1 layer with stopping angle
Plan

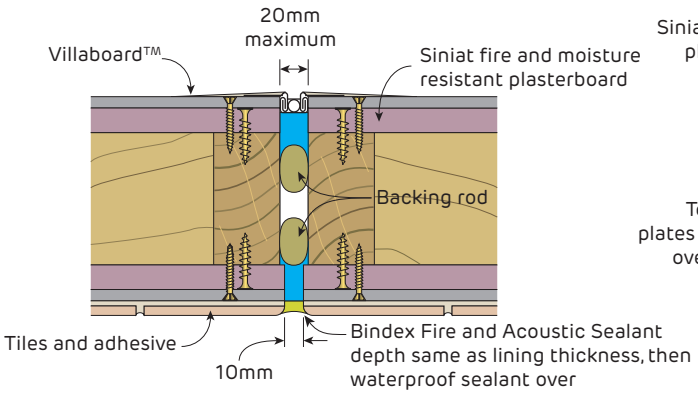

FIGURE 33 Control Joint
Fire rated for wet area
Plan

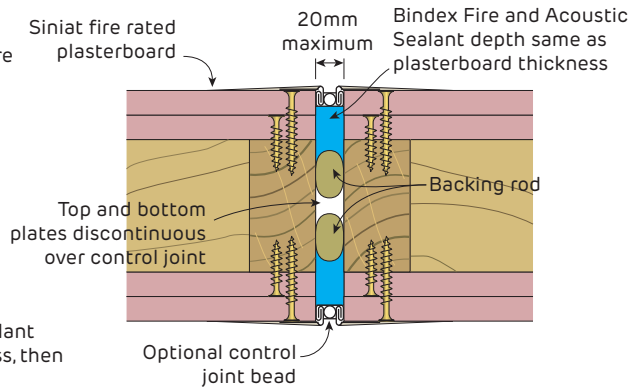

FIGURE 34 Control Joint
Fire rated - 2 layers
Plan

Fire Rated and Non-Fire Rated
Typical Door Jamb Details

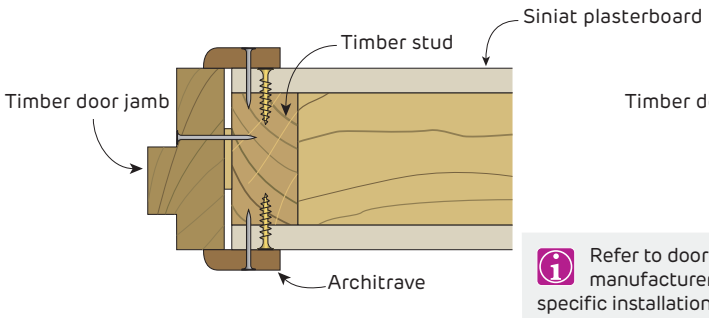

Refer to door jamb manufacturer for specific installation details

FIGURE 35 Typical Timber Door Jamb
Plan

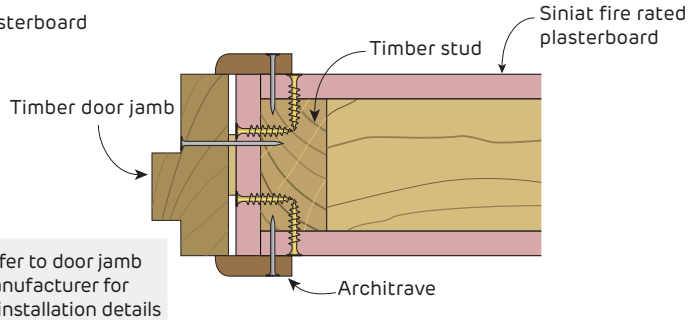

FIGURE 36 Typical Fire Rated Door Jamb
Example only
Plan

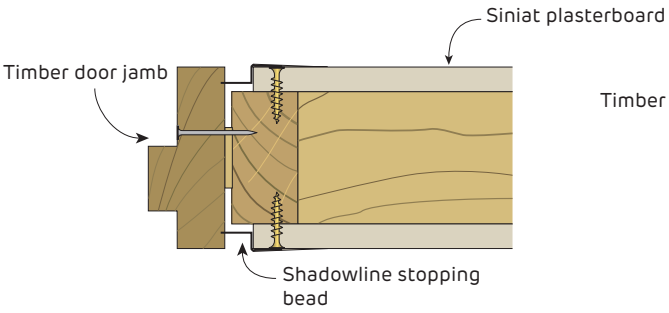

FIGURE 37 Typical Timber Door Jamb
With shadowline stopping bead
Plan

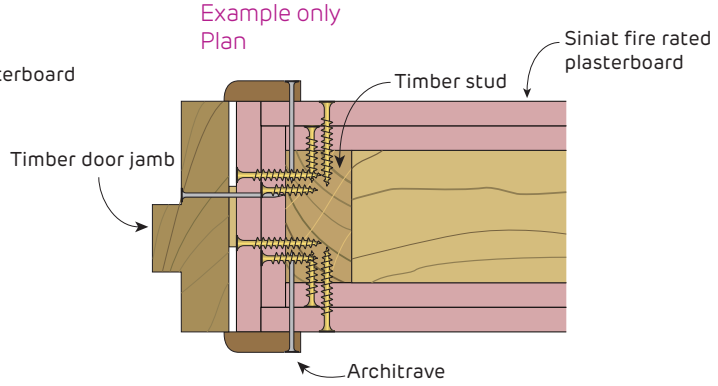

FIGURE 38 Typical Fire Rated Door Jamb
Example only
Plan

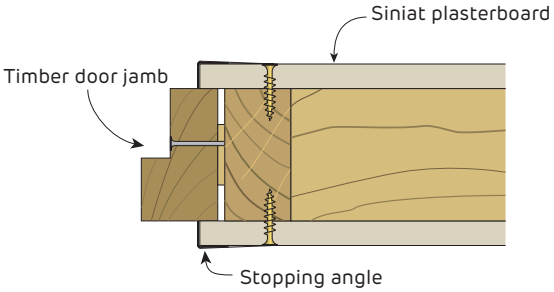

FIGURE 39 Typical Timber Door Jamb
With stopping angle
Plan

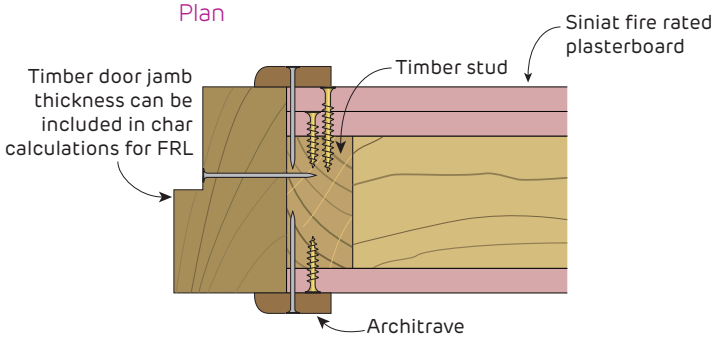

FIGURE 40 Typical Fire Rated Door Jamb
Example only
Plan

Fill any gaps with Bindex Fire and Acoustic Sealant to maintain integrity



DEFINITIONS 250

WET AREA REQUIREMENTS 250

WATERPROOFING REQUIREMENTS BY AREA 251

INSTALLATION 253

GENERAL REQUIREMENTS 253

FRAMING 253

PLASTERBOARD LAYOUT 253

PLASTERBOARD FIXING 253

CONSTRUCTION DETAILS 256

3.4 Internal Wet Areas using Plasterboard

Australian Standard AS 3740 - Waterproofing of Wet Areas within Residential Buildings defines a wet area as an area within a building supplied with water from a water supply system and includes bathrooms, showers, laundries and sanitary compartments.

Waterproofing of wet area walls may be achieved by using water resistant plasterboards such as **water**shield, **multi**shield, **tru**rock or **tru**rock hd. Wet area ceilings may be non-water resistant plasterboard.

This section contains:

- Installation instructions for wet area walls
- Waterproofing treatment methods over plasterboard walls
- Construction details for wet areas.

Some elements of wet area installation will be carried out by a plasterer, and other elements will be completed by trades such as plumbers and tilers. All waterproofing must be carried out by an approved applicator [Refer to Section 2.3 for more information on wet areas].

Definitions

Waterproof Membrane

Waterproof membranes are a layer of material impervious to water that are usually liquid applied. They must comply with *AS/NZS 4858:2004, Wet Area Membranes* and be applied according to the manufacturer's instructions.

Flashing

Flashing is a strip or sleeve of impervious material such as metal angle, or a liquid applied product such as a waterproof membrane. It must provide a barrier to moisture movement.

Shower Area

Shower areas consist of enclosed and unenclosed areas:

- Unenclosed shower areas extend 1500mm horizontally from the shower connection on the wall, up to a height of 1800mm from the finished floor.
- Enclosed shower areas are bounded by walls or screens up to a height of 1800mm from the finished floor. Walls or screens include hinged or sliding doors that control the spread of water to within the enclosure.

A shower fitted with a frameless glass shower screen or screen over a bath less than 1500mm long is not an enclosed shower.

Wet Area Requirements

Different wet areas require different levels of treatment to protect them from moisture.

Table 1 Wet Area Installation Requirements

Area	Level of Risk	Walls	Junctions	Penetrations+
Shower area	High	Water Resistant	Waterproof	Waterproof
Bathrooms	Medium	-	Waterproof ^	-
Areas adjacent to baths and spas	Medium	Water Resistant	Waterproof	Waterproof *
Walls adjoining other vessels	Low	Water Resistant	Waterproof	Waterproof *
Laundries and WC's	Low	-	Waterproof ^	-
Bathrooms and laundries requiring a floor waste	High	-	Waterproof ^	Waterproof

+ Including mechanical fixings or fasteners.
^ Applies to wall/floor junctions only.
* Horizontal surface waterproof, vertical surface water resistant.

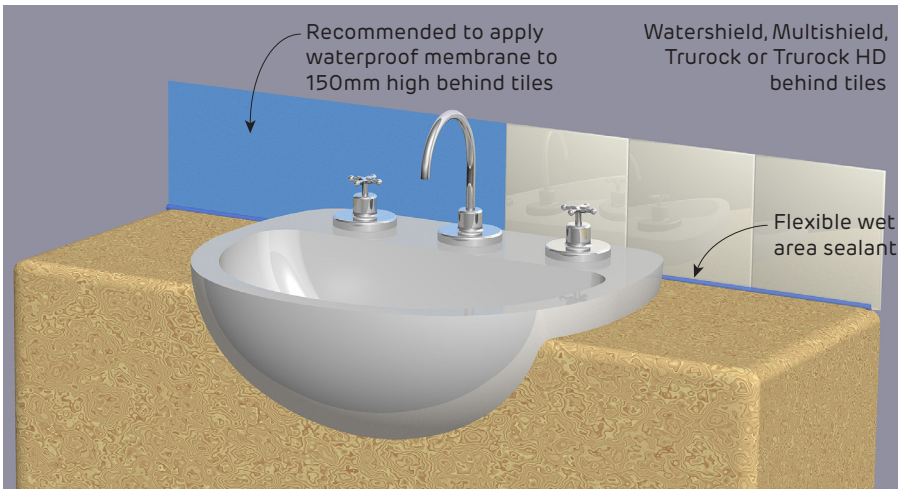

FIGURE 1 Basin

Waterproofing Requirements by Area

Water Resistant Walls
Use **water**shield, **multi**shield, **tru**rock or **tru**rock hd covered with a waterproof membrane and tiles.
For all plasterboard joints, corners and fastener heads use masta**base** or masta**longset**.
[Refer to waterproof membrane manufacturer for application instructions]
Walls Adjoining Other Vessels
Ensure walls within 75mm of a vessel such as a sink, basin or laundry tub have tiles over water resistant plasterboard to a height of 150mm minimum above the vessel.
Seal all edges where the vessel is fixed to the wall.
Waterproof Penetrations
Use a waterproof sealant or a proprietary flange system to waterproof penetrations.
Waterproof Vertical Junctions (where required)
Use a waterproof membrane as vertical flashing that has a minimum overlap of 40mm to the wall sheeting for each leg.
Wall/Floor Junctions in Shower Areas and Adjacent to Baths and Spas
Use a waterproof membrane on walls to: > 150mm minimum above the finished shower floor level or lip of bath > And 25mm minimum above the maximum retained water level > And with the horizontal leg width a minimum of 50mm.
Wall/Floor Junctions Outside Shower Areas
Use a waterproof membrane or metal angle as flashing with a vertical leg a minimum of 25mm above the finished floor level with the horizontal leg width a minimum of 50mm.

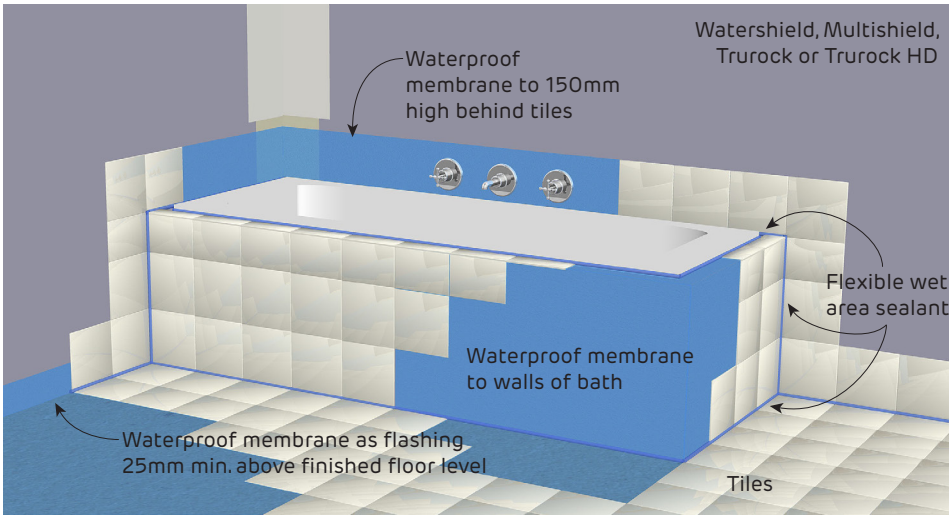

FIGURE 2 Bath (without shower) installation on timber flooring

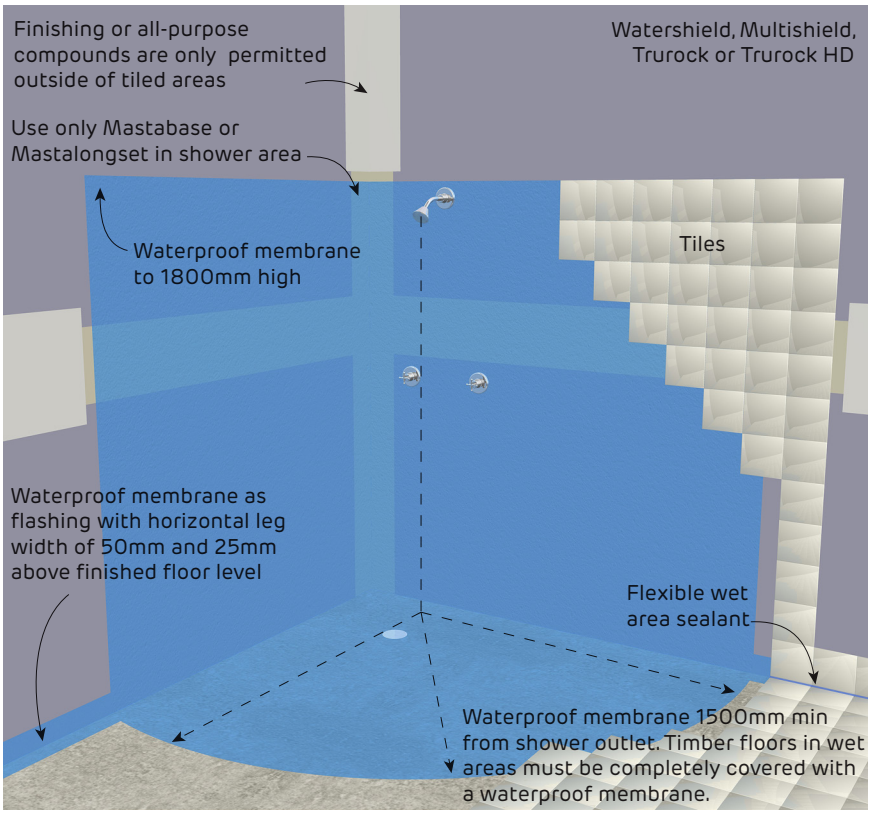

FIGURE 3 Internal in situ tray for unenclosed shower
On concrete or compressed fibre cement floor

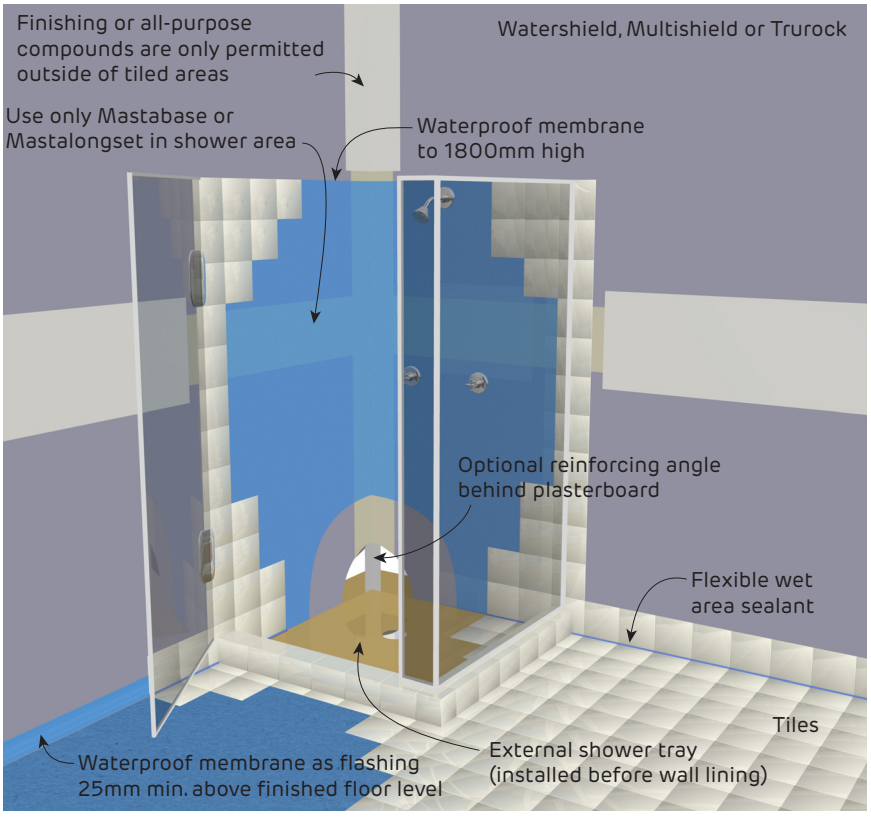

FIGURE 4 External tray for unenclosed shower
On timber flooring

General Requirements

For **water**shield refer to Section 3.1 non-fire rated requirements.
Waterproof all cut edges of **water**shield, **multi**shield, **tru**rock or **tru**rock hd that may be affected by moisture, including all penetrations and the bottom edge over a preformed shower base.
Only use paper tape and masta**base** or masta**longset** for jointing in tiled areas to strengthen the joint and provide a continuous surface for the waterproof membrane.
Recess pre-formed shower bases, baths and spas sufficiently into the wall to allow the tiles to pass down the inside perimeter rebate of the shower base [Refer to Construction Details].
After the installation of tiles, apply a waterproof sealant to all wall/floor junctions and vertical corner joints.

- Masonry adhesive and stud adhesive are not permitted in tiled areas
- Frame movement should be limited at junctions in high risk areas such as showers. For this purpose use a minimum 35x35mm x 0.7mm BMT steel backing angle fixed to the frame in internal corners.

Framing

For internal steel framed walls refer to Section 3.1. For internal timber walls refer to Section 3.3.
For masonry walls lined with moisture resistant plasterboard and tiles, use the furring channel method. Refer to Section 3.4

Plasterboard Layout

For **water**shield refer to Section 3.1 or 3.2 non-fire rated requirements.
For **multi**shield, **tru**rock or **tru**rock hd refer to Section 3.1 or 3.2 fire rated requirements.

Plasterboard Fixing

Use the 'Screw Only Method' in tiled or fire rated areas. Masonry or stud adhesives are not permitted.
Drive screws to just below the sheet surface, taking care not to break the paper linerboard. For over-driven screws, install another screw 20mm away. Leave or remove the over-driven screw and patch.
Laminating screws can be used to fix butt joints in the second and third layer.
Tiles weighing up to 22 kg/m² (porcelain 9mm thick) may be installed when fasteners are spaced at 200mm maximum centres.
Tiles weighing from 22 to 32 kg/m² may be installed when fasteners are spaced at 200mm maximum centres on studs at 450mm centres, or fasteners spaced at 100mm centres on studs at 600mm maximum centres.

FIGURE 5 Tiled Areas 1 Layer - Horizontal
Screw Only Method

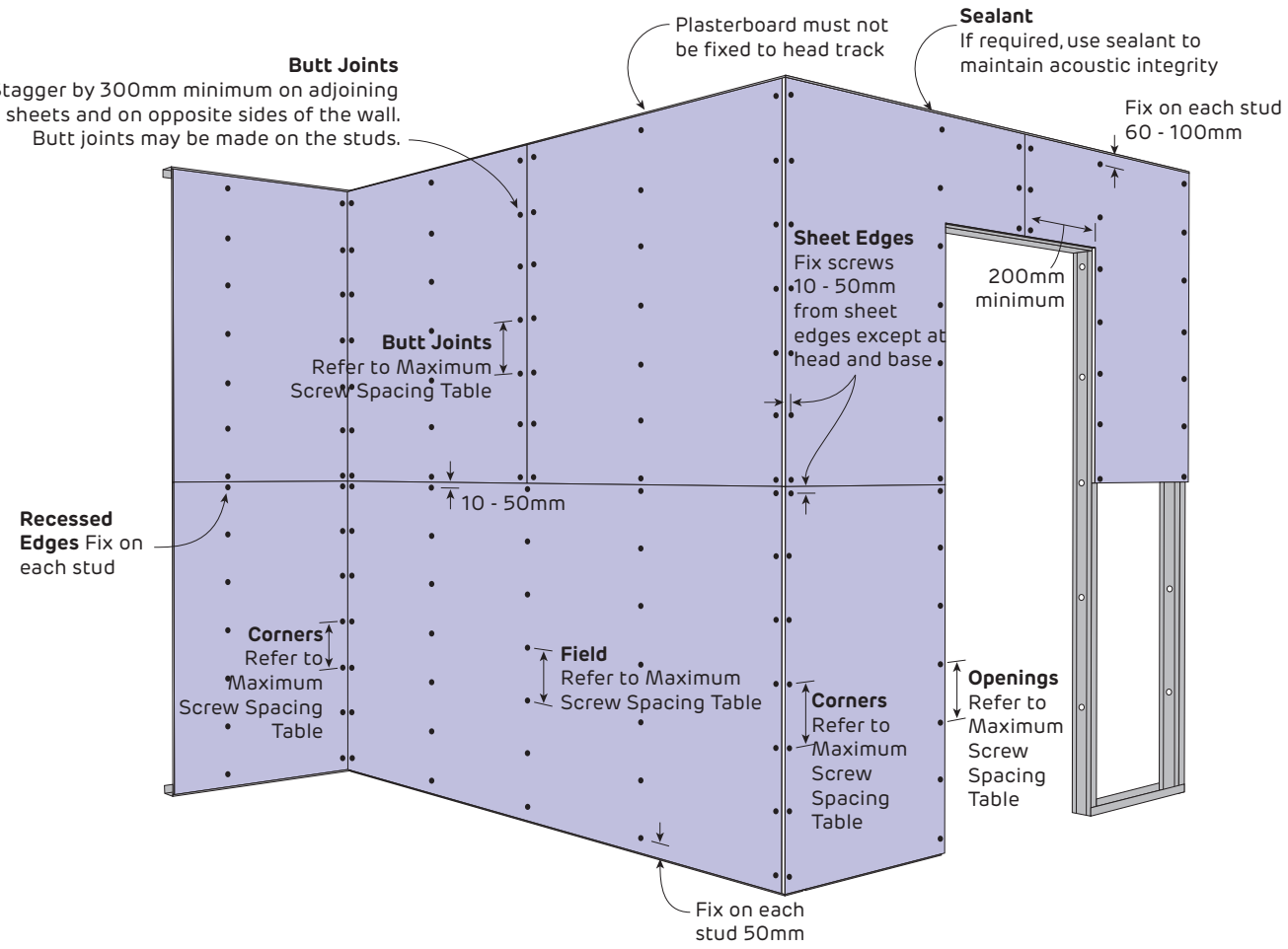

Maximum Screw Spacing Table For Wet Area Walls (mm)

Tile Weight	Internal Wall Stud Spacing			
	600mm	450mm	400mm	300mm
Up to 22 kg/m² (9mm porcelain)	200	200	200	200
Up to 32 kg/m² (13mm porcelain)	100	200	200	200

Fixing Pattern Table

Sheet Width	Fixing Pattern for Screws at 200mm maximum	Fixing Pattern for Screws at 100mm maximum
600mm	S S S S (4)	S S S S S S S (7)
900mm	S S S S S S (6)	S S S S S S S S S S (10)
1200mm	S S S S S S S (7)	S S S S S S S S S S S S S (13)
1350mm	S S S S S S S S (8)	S S S S S S S S S S S S S S (14)
1400mm	S S S S S S S S (8)	S S S S S S S S S S S S S S S (15)

S = Screw

Maximum Ultimate Limit State Wind Load Table (kPa)

Plasterboard Thickness	Maximum Wall Stud Spacing			
	600mm	450mm	400mm	300mm
10mm	1.15	1.55	1.75	2.35
13mm	1.30	1.75	1.95	2.60
16mm	1.30	1.75	1.95	2.60

1. Calculations do not include the framing which must be independently designed to suit the desired loads.
2. If higher internal wind pressures are expected, please contact Siniat for specific design.

FIGURE 6 Untiled Areas 1 Layer - Horizontal
Screw and Adhesive Method

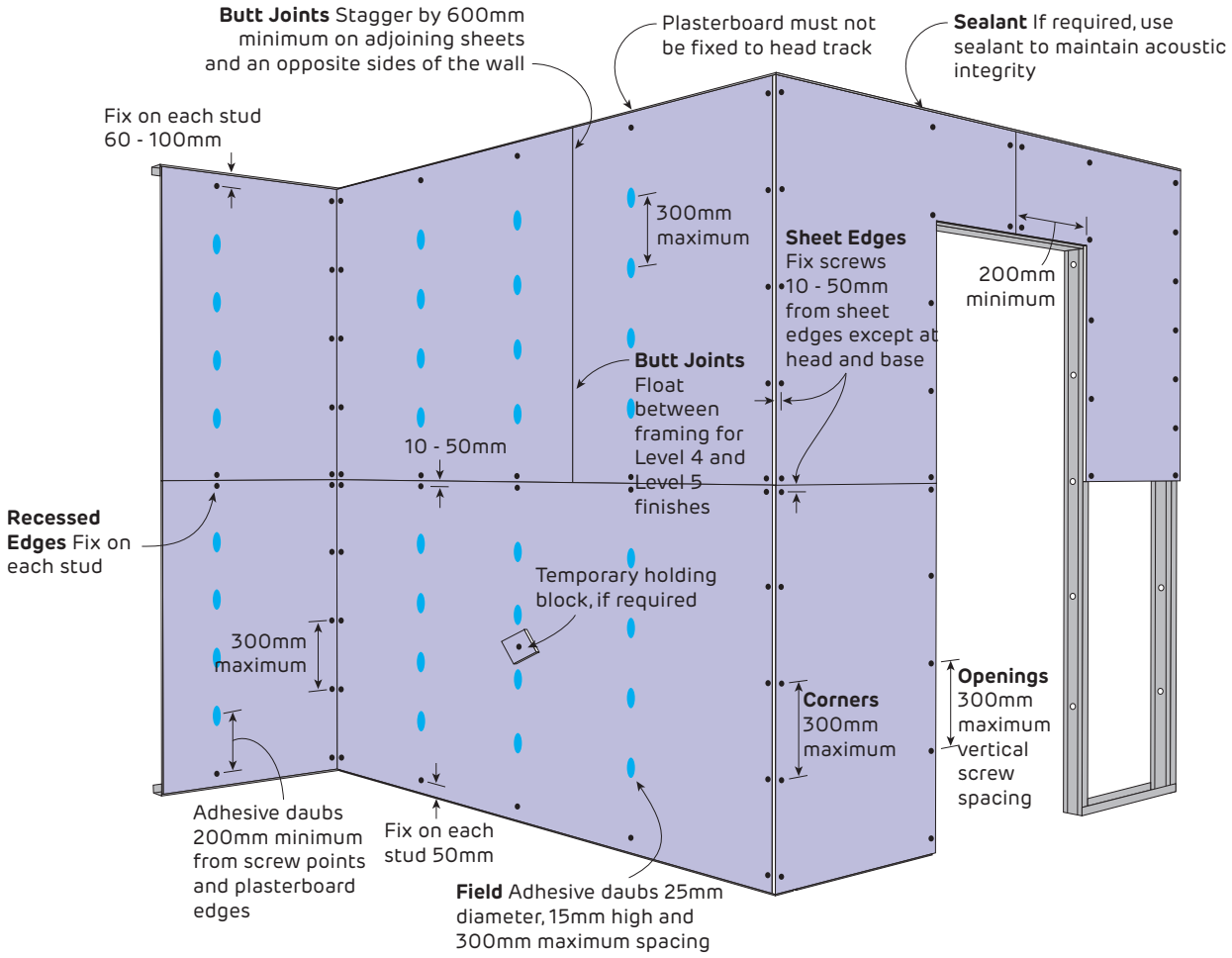

Fixing Pattern Table

Sheet Width	Fixing Pattern
600mm	S A A S
900mm	S A A A S
1200mm	S A A A A S
1350mm	S A A A A A S
1400mm	S A A A A A S

S = Screw
A = Adhesive daub

Maximum Ultimate Limit State Wind Load Table (kPa)

Plasterboard Thickness	Maximum Wall Stud Spacing			
	600mm	450mm	400mm	300mm
10mm	0.95	1.30	1.45	1.95
13mm	1.10	1.45	1.65	2.20
16mm	1.10	1.45	1.65	2.20

1. Calculations do not include the framing which must be independently designed to suit the desired loads.
2. If higher internal wind pressures are expected, please contact Siniat for specific design.

Non-Fire Rated
Shower Wall Details

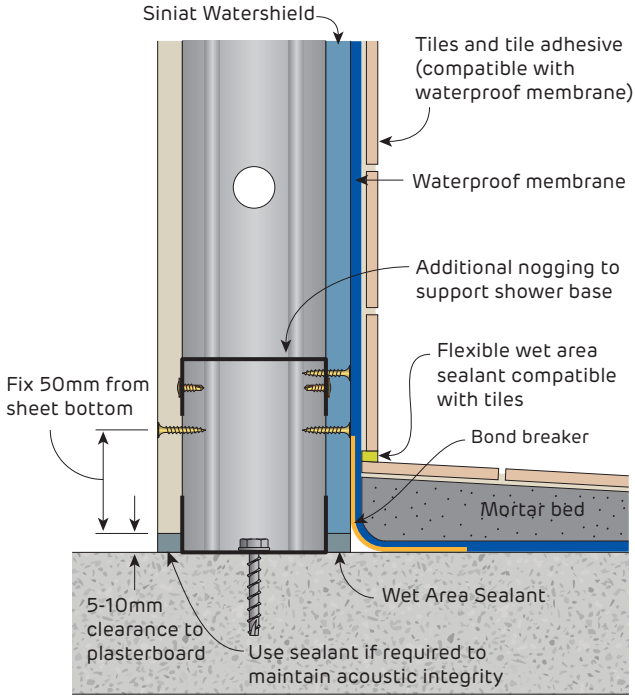

FIGURE 7 Shower Base
Internal in-situ shower tray
Class 2 membrane shown - Section

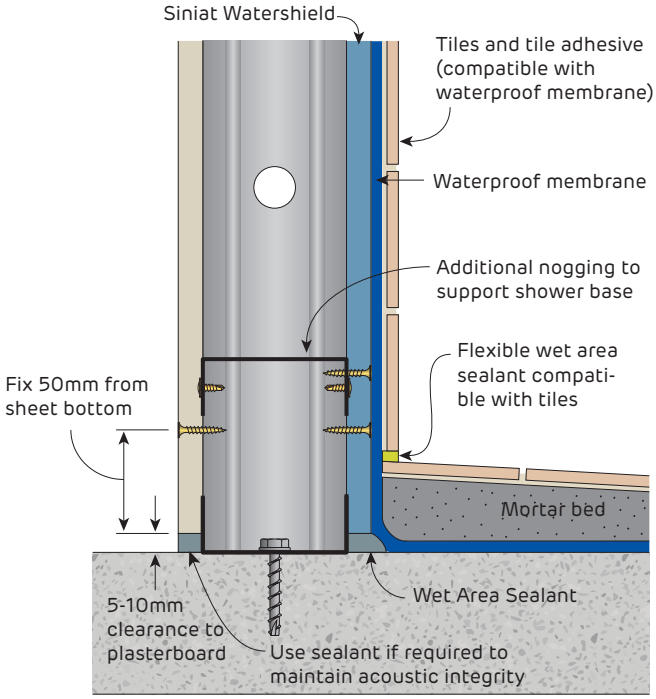

FIGURE 8 Shower Base
Internal in-situ shower tray
Class 3 membrane shown - Section

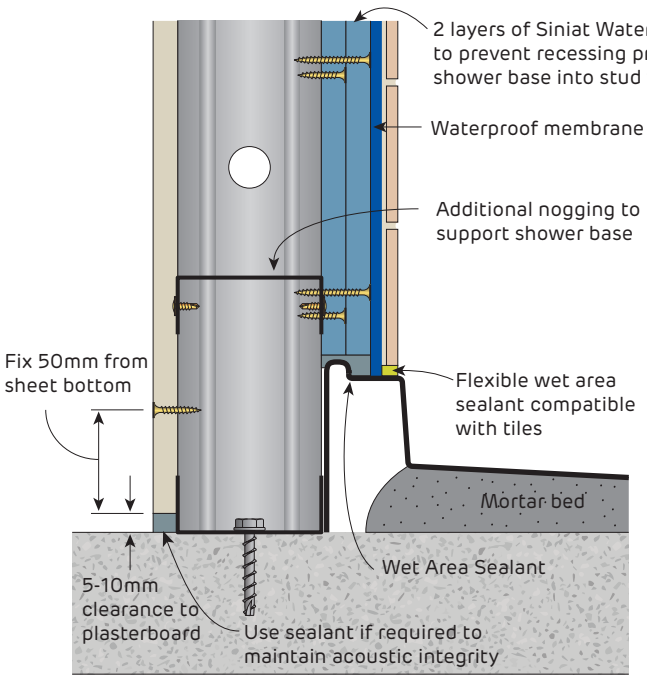

FIGURE 9 Shower Base
Pre-formed shower tray - Section

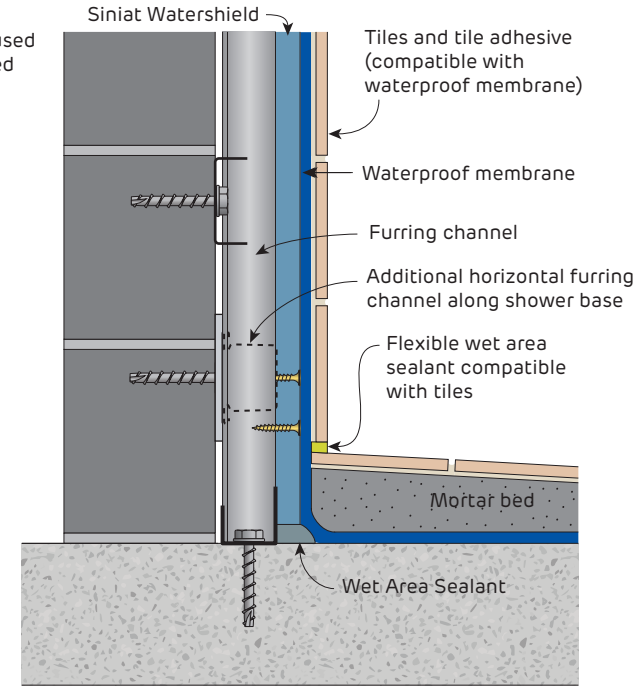

FIGURE 10 Shower Base over Masonry Wall
Internal in-situ shower tray
Class 3 membrane shown - Section

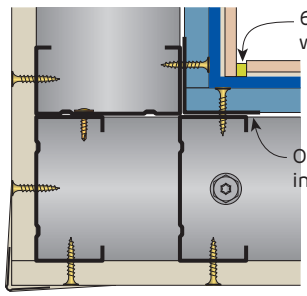

FIGURE 11 Shower Corner
Plan

Refer to proprietary waterproof membrane manufacturer for specific application instructions.

Non-Fire Rated
Bath Details

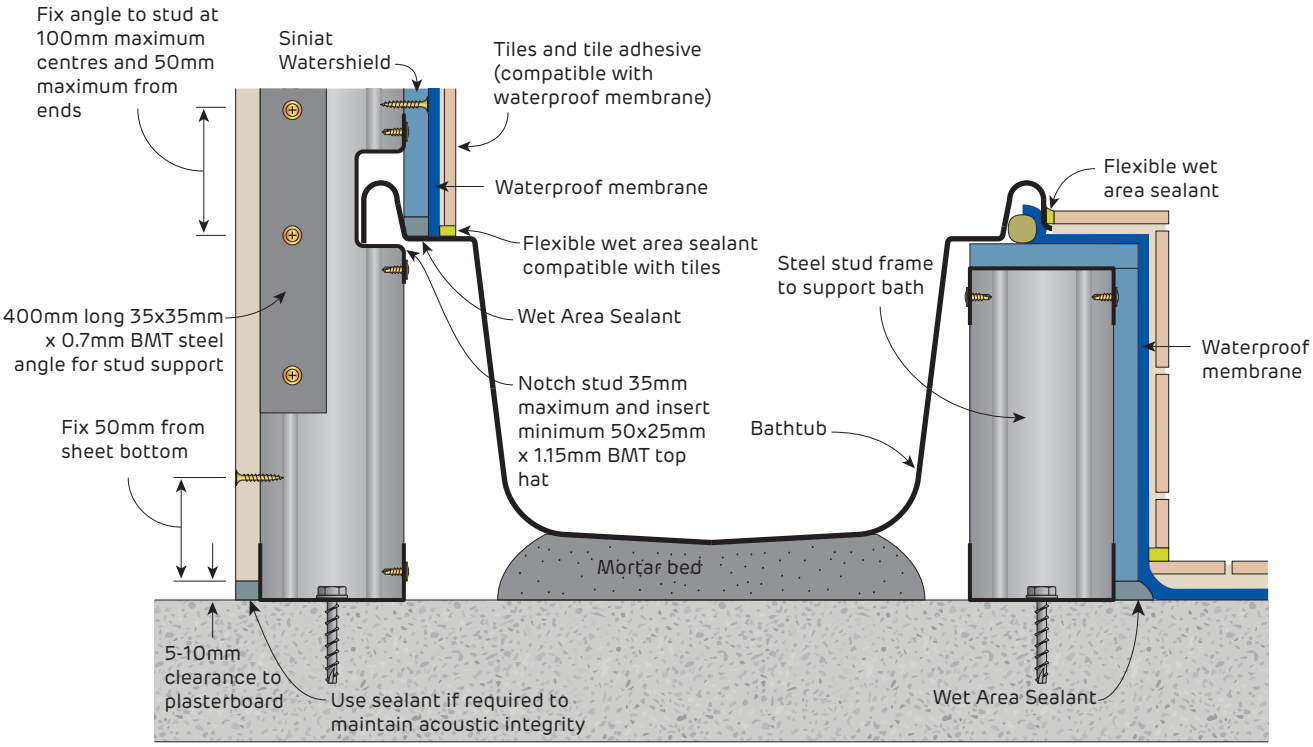

FIGURE 12 Bathtub
Section

Refer to proprietary waterproof membrane manufacturer for specific application instructions.

Non-Fire Rated
General Wet Area Details

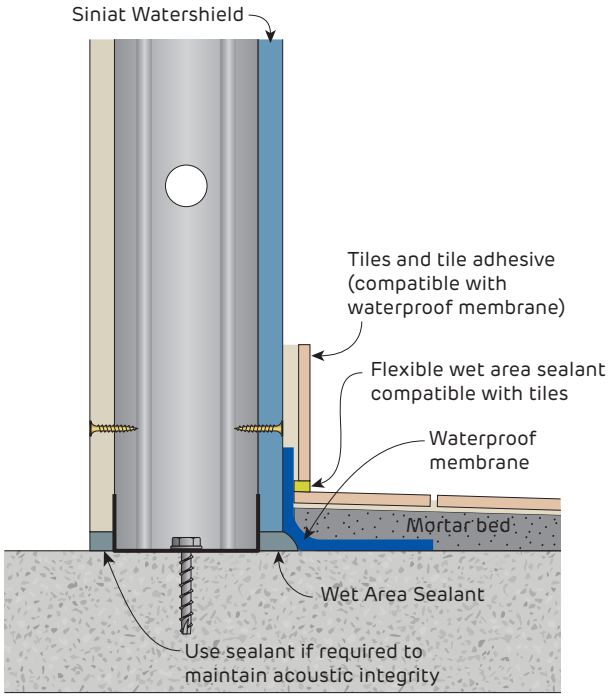

FIGURE 13 Wall Base in General Wet Area
Outside shower - Class 3 membrane shown
Section

Fire Rated
Shower Wall Details

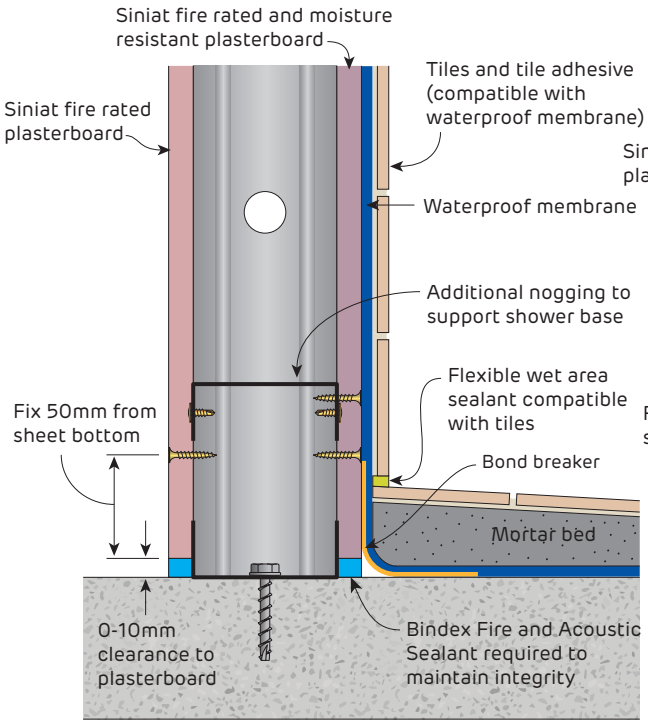

FIGURE 14 Shower Base
Internal in-situ shower tray
Class 2 membrane shown - Section

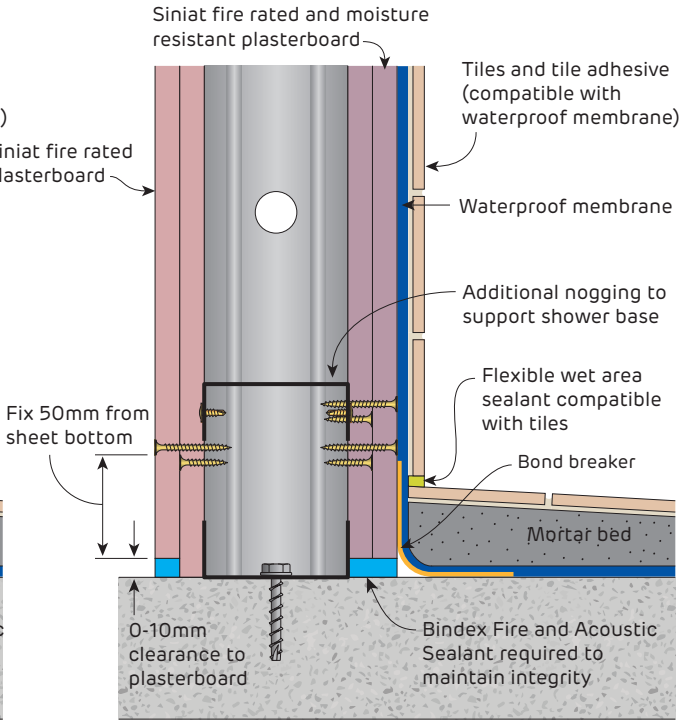

FIGURE 15 Shower Base
Internal in-situ shower tray
Class 2 membrane shown - Section

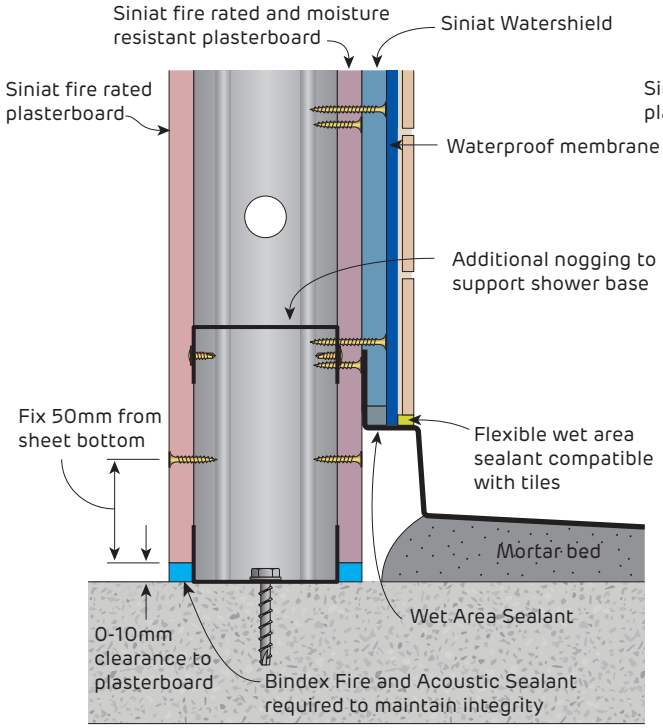

FIGURE 16 Shower Base
Pre-formed shower tray with upstand
Section

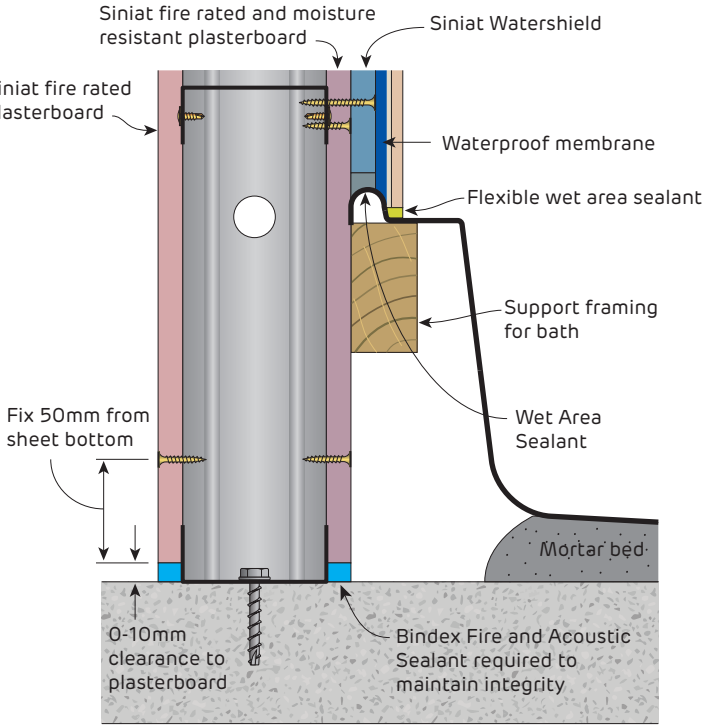

FIGURE 17 Bathtub
Section

Refer to proprietary waterproof membrane manufacturer for specific application instructions.

For fire rated penetration details, refer to Section 3.1 or 3.2



SYSTEMS	**260**
SYSTEM DIRECTORY	260
INSTALLATION	**280**
GENERAL REQUIREMENTS	280
FRAMING	281
PLASTERBOARD LAYOUT	284
PLASTERBOARD FIXING	285
CONSTRUCTION DETAILS	**292**

3.5 Plasterboard with Masonry Walls

Plasterboard may be installed over masonry walls to create a decorative finish. It removes the need for rendering and may also upgrade the fire and acoustic performance of a wall. Services may be installed in the cavity between the masonry and plasterboard, thus avoiding the chasing of masonry walls.

'Masonry' in this manual includes concrete, bricks, blocks, autoclaved aerated concrete (AAC) and concrete filled PVC permanent formwork.

System Directory

Acoustic Upgrades with Plasterboard

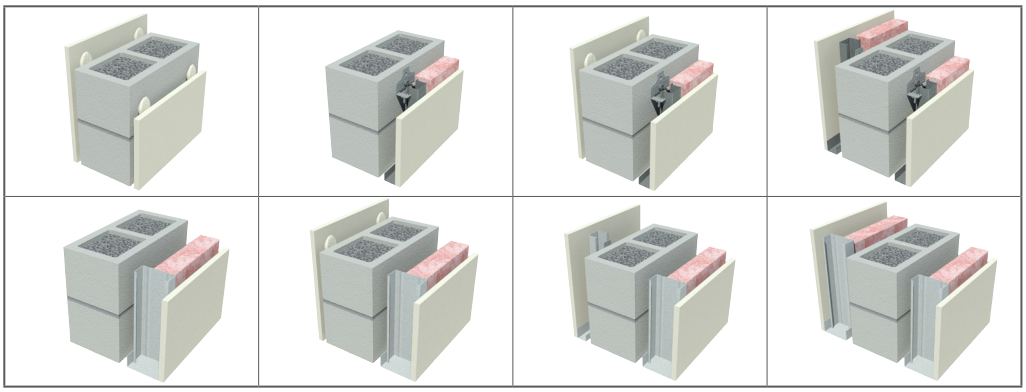

Blade Column Walls

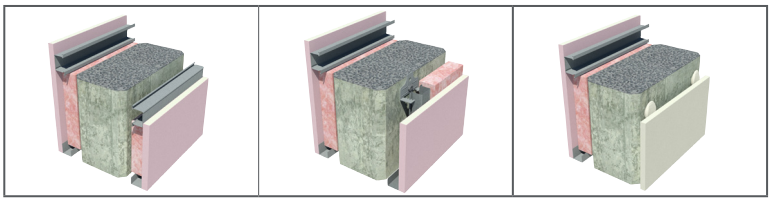

Fire Upgrades with Plasterboard

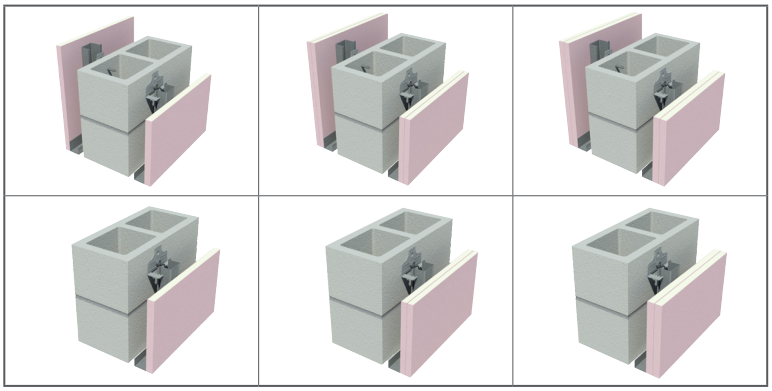

AAC Systems with Plasterboard

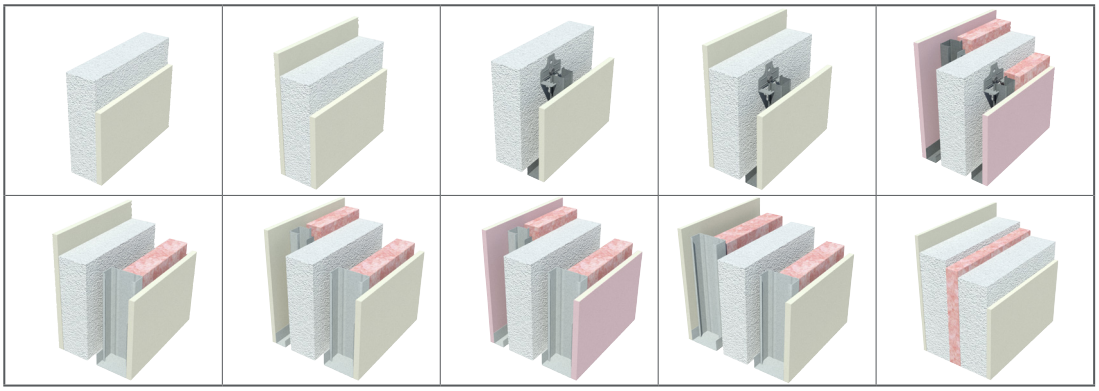

DINCEL Systems with Plasterboard

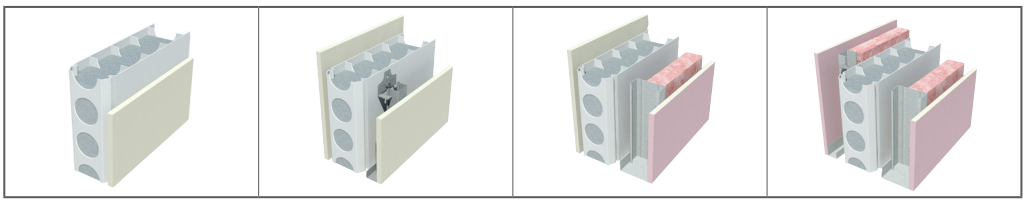

PMW1000

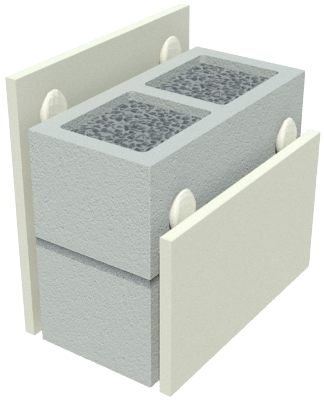

- [Side 1] 1 layer of Plasterboard as specified in table adhered with mastabond Masonry Adhesive
- Masonry wall as specified in the table [refer to masonry manufacturer or relevant Australian Standard for FRL]
- [Side 2] 1 layer of Plasterboard as specified in table adhered with mastabond Masonry Adhesive

13mm **masta**shield can be substituted with 10mm **opal**, 10mm **sound**shield or 13mm **water**shield

13mm **masta**shield adhered to concrete blocks/concrete with **masta**bond Masonry Adhesive can be left bare, painted or rendered with 13mm render on one side only

Masonry Type	System	Plasterboard Lining	Sound Insulation Rw (Rw + Ctr)	
			No insulation	
Minimum 110mm Double Brick with minimum 50mm air-gap Minimum laid weight 320 kg/m²	PMW1103	[Side 1] 13mm **masta**shield [Side 2] 13mm **masta**shield	53 (48)	
	PMW1107	[Side 1] 13mm **sound**shield [Side 2] 13mm **sound**shield	55 (**50**)	
	PMW1111	[Side 1] 13mm **fire**shield [Side 2] 13mm **fire**shield	53 (49)	
Minimum 140mm unfilled Concrete Block Minimum laid weight 180 kg/m²	PMW1453	[Side 1] 13mm **masta**shield [Side 2] 13mm **masta**shield	46 (40)[1]	
	PMW1457	[Side 1] 13mm **sound**shield [Side 2] 13mm **sound**shield	46 (40)	
	PMW1461	[Side 1] 13mm **fire**shield [Side 2] 13mm **fire**shield	46 (40)	
Minimum 140mm core - filled Concrete Block Minimum laid weight 280 kg/m²	PMW1153	[Side 1] 13mm **masta**shield [Side 2] 13mm **masta**shield	49 (44)	
	PMW1157	[Side 1] 13mm **sound**shield [Side 2] 13mm **sound**shield	51 (46)	
	PMW1161	[Side 1] 13mm **fire**shield [Side 2] 13mm **fire**shield	50 (45)	
Minimum 190mm unfilled Concrete Block Minimum laid weight 220 kg/m²	PMW1503	[Side 1] 13mm **masta**shield [Side 2] 13mm **masta**shield	49 (42)	Reports 1021067-R01 3094-55 [1]3094A-7
	PMW1507	[Side 1] 13mm **sound**shield [Side 2] 13mm **sound**shield	49 (42)	
	PMW1511	[Side 1] 13mm **fire**shield [Side 2] 13mm **fire**shield	49 (42)	
Minimum 190mm core - filled Concrete Block Minimum laid weight 280 kg/m²	PMW1203	[Side 1] 13mm **masta**shield [Side 2] 13mm **masta**shield	51 (45)	
	PMW1207	[Side 1] 13mm **sound**shield [Side 2] 13mm **sound**shield	53 (47)	
	PMW1211	[Side 1] 13mm **fire**shield [Side 2] 13mm **fire**shield	52 (46)	
Minimum 150mm Concrete	PMW1253	[Side 1] 13mm **masta**shield [Side 2] 13mm **masta**shield	49 (45)	
	PMW1257	[Side 1] 13mm **sound**shield [Side 2] 13mm **sound**shield	51 (46)	
	PMW1261	[Side 1] 13mm **fire**shield [Side 2] 13mm **fire**shield	50 (45)	
Minimum 200mm Concrete	PMW1303	[Side 1] 13mm **masta**shield [Side 2] 13mm **masta**shield	52 (46)	
	PMW1307	[Side 1] 13mm **sound**shield [Side 2] 13mm **sound**shield	54 (48)	
	PMW1311	[Side 1] 13mm **fire**shield [Side 2] 13mm **fire**shield	53 (47)	

PMW2000

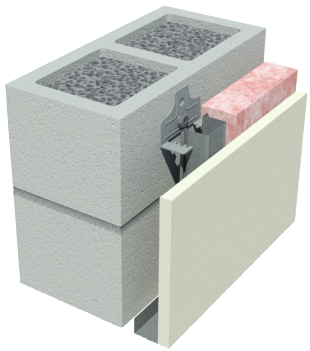

- [Side 1] Left bare
- Masonry wall as specified in the table [refer to masonry manufacturer or relevant Australian Standard for FRL]
- [Side 2] Plasterboard as specified in table fixed to furring channels on clips

13mm **masta**shield can be substituted with 10mm **opal**, 10mm **sound**shield or 13mm **water**shield
13mm **fire**shield can be substituted with 13mm **multi**shield
16mm **fire**shield can be substituted with 16mm **multi**shield
13mm **sound**shield can be substituted with 13mm **tru**rock

Masonry Type	System	Plasterboard Lining	Sound Insulation Rw (Rw + Ctr)			
			Minimum 30mm cavity with no insulation	Minimum 30mm cavity with Pink® Partition 25mm 24 kg/m³ R0.7	Minimum 50mm cavity with Pink® Partition 50mm 11 kg/m³ R1.2	
Minimum 140mm unfilled Concrete Block Minimum laid weight 180 kg/m²	PMW2451	[Side 2] 1 layer of 13mm **masta**shield	50 (43)	54 (45)	57 (47)	
	PMW2452	[Side 2] 2 layers of 13mm **masta**shield	53 (46)	57 (48)	60 (**50**)	
	PMW2455	[Side 2] 1 layer of 13mm **sound**shield	52 (44)	56 (47)	59 (49)	
	PMW2456	[Side 2] 2 layers of 13mm **sound**shield	54 (47)	58 (**51**)	61 (**52**)	
	PMW2459	[Side 2] 1 layer of 13mm **fire**shield	51 (43)	55 (46)	58 (48)	
	PMW2460	[Side 2] 2 layers of 13mm **fire**shield	54 (46)	58 (49)	61 (**51**)	
Minimum 140mm core - filled Concrete Block Minimum laid weight 280 kg/m²	PMW2151	[Side 2] 1 layer of 13mm **masta**shield	50 (42)	54 (45)	56 (47)	
	PMW2155	[Side 2] 1 layer of 13mm **sound**shield	53 (44)	56 (47)	58 (49)	
	PMW2159	[Side 2] 1 layer of 13mm **fire**shield	52 (43)	55 (46)	57 (48)	
	PMW2164	[Side 2] 1 layer of 16mm **fire**shield	53 (44)	56 (47)	58 (49)	
Minimum 190mm unfilled Concrete Block Minimum laid weight 220 kg/m²	PMW2501	[Side 2] 1 layer of 13mm **masta**shield	51 (43)	55 (46)	58 (48)	Reports 1021067-R01 4738-13
	PMW2502	[Side 2] 2 layers of 13mm **masta**shield	54 (45)	58 (49)	61 (**51**)	
	PMW2505	[Side 2] 1 layer of 13mm **sound**shield	53 (44)	57 (48)	60 (**50**)	
	PMW2509	[Side 2] 1 layer of 13mm **fire**shield	52 (44)	56 (47)	59 (49)	
	PMW2510	[Side 2] 2 layers of 13mm **fire**shield	55 (46)	59 (**50**)	62 (**52**)	
Minimum 190mm core - filled Concrete Block Minimum laid weight 380 kg/m²	PMW2201	[Side 2] 1 layer of 13mm **masta**shield	54 (44)	57 (47)	59 (**50**)	
	PMW2205	[Side 2] 1 layer of 13mm **sound**shield	56 (46)	59 (49)	61 (**52**)	
	PMW2209	[Side 2] 1 layer of 13mm **fire**shield	55 (45)	58 (48)	60 (**51**)	
	PMW2214	[Side 2] 1 layer of 16mm **fire**shield	56 (46)	59 (49)	61 (**52**)	
Minimum 150mm Concrete	PMW2251	[Side 2] 1 layer of 13mm **masta**shield	49 (43)	56 (46)	63 (**50**)	
	PMW2255	[Side 2] 1 layer of 13mm **sound**shield	51 (45)	58 (48)	65 (**52**)	
	PMW2259	[Side 2] 1 layer of 13mm **fire**shield	50 (44)	57 (47)	64 (**51**)	
	PMW2264	[Side 2] 1 layer of 16mm **fire**shield	51 (45)	58 (48)	65 (**52**)	
Minimum 200mm Concrete	PMW2301	[Side 2] 1 layer of 13mm **masta**shield	53 (46)	60 (49)	66 (**52**)	
	PMW2305	[Side 2] 1 layer of 13mm **sound**shield	55 (48)	62 (**51**)	68 (**54**)	
	PMW2309	[Side 2] 1 layer of 13mm **fire**shield	54 (47)	61 (**50**)	67 (**53**)	
	PMW2314	[Side 2] 1 layer of 16mm **fire**shield	55 (48)	62 (**51**)	68 (**54**)	

PMW3000

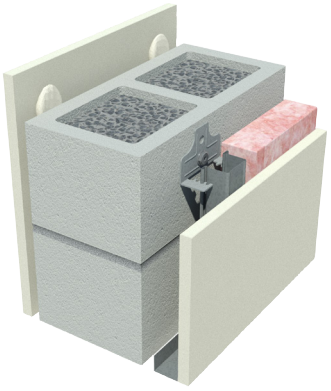

- [Side 1] 1 layer of 13mm mastashield adhered with mastabond Masonry Adhesive
- Masonry wall as specified in the table [refer to masonry manufacturer or relevant Australian Standard for FRL]
- [Side 2] Plasterboard as specified in table fixed to furring channels on clips

13mm **masta**shield can be substituted with 13mm **water**shield on the furring channel side
13mm **masta**shield adhered to concrete blocks/concrete can be substituted with 13mm render
13mm **masta**shield can be substituted with 10mm **opal** or 10mm **sound**shield
13mm **fire**shield can be substituted with 13mm **multi**shield
13mm **sound**shield can be substituted with 13mm **tru**rock
16mm **fire**shield can be substituted with 16mm **multi**shield

Masonry Type	System	Plasterboard Lining	Sound Insulation Rw (Rw + Ctr)			
			Minimum 30mm cavity with no insulation	Minimum 30mm cavity with Pink® Partition 25mm 24 kg/m³ R0.7	Minimum 50mm cavity with Pink® Partition 50mm 11 kg/m³ R1.2	
Minimum 140mm unfilled Concrete Block Minimum laid weight 180 kg/m²	PMW3453	[Side 2] 1 layer of 13mm **masta**shield	51 (44)	55 (46)	58 (48)	Reports 1021067-R01 3094-55 [1]3094A-5 [2]3094-A-4
	PMW3454	[Side 2] 2 layers of 13mm **masta**shield	54 (47)	59 (49)	61 (**51**)	
	PMW3469	[Side 2] 1 layer of 13mm **sound**shield	53 (45)	57 (48)	60 (**50**)	
	PMW3472	[Side 2] 2 layers of 13mm **sound**shield	55 (48)	59 (**52**)	62 (**53**)	
	PMW3470	[Side 2] 1 layer of 13mm **fire**shield	52 (44)[1]	56 (47)	59 (49)[2]	
	PMW3473	[Side 2] 2 layers of 13mm **fire**shield	55 (47)	59 (**50**)	62 (**52**)	
Minimum 140mm core - filled Concrete Block Minimum laid weight 280 kg/m²	PMW3153	[Side 2] 1 layer of 13mm **masta**shield	52 (44)	55 (47)	57 (49)	
	PMW3169	[Side 2] 1 layer of 13mm **sound**shield	54 (46)	57 (49)	59 (**51**)	
	PMW3170	[Side 2] 1 layer of 13mm **fire**shield	53 (45)	56 (48)	58 (**50**)	
	PMW3171	[Side 2] 1 layer of 16mm **fire**shield	54 (46)	57 (49)	59 (**51**)	
Minimum 190mm unfilled Concrete Block Minimum laid weight 220 kg/m²	PMW3503	[Side 2] 1 layer of 13mm **masta**shield	52 (44)	56 (47)	59 (49)	
	PMW3504	[Side 2] 2 layers of 13mm **masta**shield	55 (46)	59 (**50**)	62 (**52**)	
	PMW3519	[Side 2] 1 layer of 13mm **sound**shield	54 (45)	58 (49)	61 (**51**)	
	PMW3520	[Side 2] 1 layer of 13mm **fire**shield	53 (45)	57 (48)	60 (**50**)	
	PMW3523	[Side 2] 2 layers of 13mm **fire**shield	56 (47)	60 (**51**)	63 (**53**)	
Minimum 190mm core - filled Concrete Block Minimum laid weight 380 kg/m²	PMW3203	[Side 2] 1 layer of 13mm **masta**shield	55 (46)	58 (49)	60 (**51**)	
	PMW3219	[Side 2] 1 layer of 13mm **sound**shield	57 (48)	60 (**51**)	62 (**53**)	
	PMW3220	[Side 2] 1 layer of 13mm **fire**shield	56 (47)	59 (**50**)	61 (**52**)	
	PMW3221	[Side 2] 1 layer of 16mm **fire**shield	57 (48)	60 (**51**)	62 (**53**)	
Minimum 150mm Concrete	PMW3253	[Side 2] 1 layer of 13mm **masta**shield	50 (44)	57 (47)	63 (**50**)	
	PMW3269	[Side 2] 1 layer of 13mm **sound**shield	52 (46)	59 (49)	65 (**52**)	
	PMW3270	[Side 2] 1 layer of 13mm **fire**shield	51 (45)	58 (48)	64 (**51**)	
	PMW3271	[Side 2] 1 layer of 16mm **fire**shield	52 (46)	59 (49)	65 (**52**)	
Minimum 200mm Concrete	PMW3303	[Side 2] 1 layer of 13mm **masta**shield	53 (46)	60 (49)	65 (**53**)	
	PMW3319	[Side 2] 1 layer of 13mm **sound**shield	55 (48)	62 (**51**)	67 (**55**)	
	PMW3320	[Side 2] 1 layer of 13mm **fire**shield	54 (47)	61 (**50**)	66 (**54**)	
	PMW3321	[Side 2] 1 layer of 16mm **fire**shield	55 (48)	62 (**51**)	67 (**55**)	

PMW4000

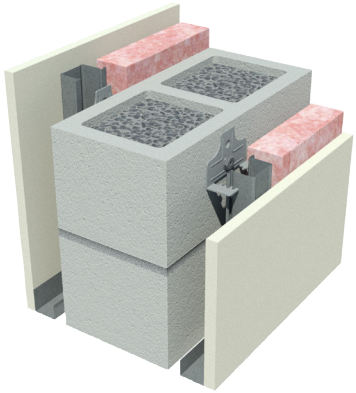

- [Side 2] Plasterboard as specified in table fixed to furring channels on clips
- Masonry wall as specified in the table [refer to masonry manufacturer or relevant Australian Standard for FRL]
- [Side 2] Plasterboard as specified in table fixed to furring channels on clips

13mm **masta**shield can be substituted with 10mm **opal**, 10mm **sound**shield or 13mm **water**shield
13mm **fire**shield can be substituted with 13mm **multi**shield
13mm **sound**shield can be substituted with 13mm **tru**rock
16mm **fire**shield can be substituted with 16mm **multi**shield

Masonry Type	System	Plasterboard Lining	Sound Insulation Rw (Rw + Ctr)				
			Minimum 30mm cavity with Pink® Partition 25mm 24 kg/m³ R0.7		Minimum 50mm cavity with Pink® Partition 50mm 11 kg/m³ R1.2		
			Insulation in one cavity only	Insulation in both cavities	Insulation in one cavity only	Insulation in both cavities	
Minimum 110mm Double Brick with minimum 50mm air-gap Minimum laid weight 320 kg/m²	PMW4103	[Side 1] 1 layer of 13mm **masta**shield [Side 2] 1 layer of 13mm **masta**shield	57 (49)	59 (**50**)	59 (***51***)	60 (**53**)	
	PMW4107	[Side 1] 1 layer of 13mm **sound**shield [Side 2] 1 layer of 13mm **sound**shield	59 (**51**)	61 (**52**)	61 (**53**)	62 (**54**)	
	PMW4111	[Side 1] 1 layer of 13mm **fire**shield [Side 2] 1 layer of 13mm **fire**shield	58 (**50**)	60 (**51**)	60 (**52**)	61 (**52**)	
	PMW4116	[Side 1] 1 layer of 16mm **fire**shield [Side 2] 1 layer of 16mm **fire**shield	59 (**51**)	61 (**53**)	61 (**53**)	62 (**54**)	
Minimum 140mm unfilled Concrete Block Minimum laid weight 180 kg/m²	PMW4453	[Side 1] 1 layer of 13mm **masta**shield [Side 2] 1 layer of 13mm **masta**shield	54 (45)	-	57 (47)	-	
	PMW4454	[Side 1] 1 layer of 13mm **masta**shield [Side 2] 2 layers of 13mm **masta**shield	57 (48)	-	60 (**50**)	-	
	PMW4457	[Side 1] 1 layer of 13mm **sound**shield [Side 2] 1 layer of 13mm **sound**shield	56 (47)	-	59 (49)*	(**50**)	
	PMW4461	[Side 1] 1 layer of 13mm **fire**shield [Side 2] 1 layer of 13mm **fire**shield	55 (46)	-	58 (48)*	(**50**)	
	PMW4462	[Side 1] 1 layer of 13mm **fire**shield [Side 2] 2 layers of 13mm **fire**shield	58 (49)*	(**50**)	61 (**51**)	-	Reports 1021067-R01 3094-55 *Use Insulation in both cavities to achieve Rw + Ctr 50
Minimum 140mm core - filled Concrete Block Minimum laid weight 280 kg/m²	PMW4153	[Side 1] 1 layer of 13mm **masta**shield [Side 2] 1 layer of 13mm **masta**shield	52 (41)	53 (45)	56 (46)	58 (47)	
	PMW4154	[Side 1] 1 layer of 13mm **masta**shield [Side 2] 2 layers of 13mm **masta**shield	55 (44)	56 (47)	59 (46)	61 (48)	
	PMW4157	[Side 1] 1 layer of 13mm **sound**shield [Side 2] 1 layer of 13mm **sound**shield	54 (43)	55 (47)	58 (48)	60 (49)	
	PMW4161	[Side 1] 1 layer of 13mm **fire**shield [Side 2] 1 layer of 13mm **fire**shield	53 (42)	57 (46)	57 (47)	59 (48)	
	PMW4162	[Side 1] 1 layer of 13mm **fire**shield [Side 2] 2 layers of 13mm **fire**shield	56 (45)	57 (49)	60 (**50**)	62 (**51**)	
	PMW4166	[Side 1] 1 layer of 16mm **fire**shield [Side 2] 1 layer of 16mm **fire**shield	53 (42)	54 (46)	57 (47)	59 (48)	
Minimum 190mm unfilled Concrete Block Minimum laid weight 220 kg/m²	PMW4503	[Side 1] 1 layer of 13mm **masta**shield [Side 2] 1 layer of 13mm **masta**shield	55 (46)	-	58 (48)*	(**50**)	
	PMW4504	[Side 1] 1 layer of 13mm **masta**shield [Side 2] 2 layers of 13mm **masta**shield	58 (49)*	(**50**)	61 (**51**)	-	
	PMW4507	[Side 1] 1 layer of 13mm **sound**shield [Side 2] 1 layer of 13mm **sound**shield	57 (48)	-	60 (**50**)	-	
	PMW4511	[Side 1] 1 layer of 13mm **fire**shield [Side 2] 1 layer of 13mm **fire**shield	56 (47)	-	59 (49)*	(**50**)	
	PMW4512	[Side 1] 1 layer of 13mm **fire**shield [Side 2] 2 layers of 13mm **fire**shield	59 (49)*	(**50**)	62 (**52**)	-	
Minimum 190mm core - filled Concrete Block Minimum laid weight 380 kg/m²	PMW4203	[Side 1] 1 layer of 13mm **masta**shield [Side 2] 1 layer of 13mm **masta**shield	54 (43)	59 (48)	57 (49)	59 (**50**)	
	PMW4207	[Side 1] 1 layer of 13mm **sound**shield [Side 2] 1 layer of 13mm **sound**shield	56 (45)	61 (48)	59 (**50**)	61 (**52**)	
	PMW4211	[Side 1] 1 layer of 13mm **fire**shield [Side 2] 1 layer of 13mm **fire**shield	55 (44)	60 (47)	58 (49)	60 (**51**)	
	PMW4216	[Side 1] 1 layer of 16mm **fire**shield [Side 2] 1 layer of 16mm **fire**shield	56 (45)	61 (48)	59 (**50**)	61 (**52**)	

PMW4000 (continued)

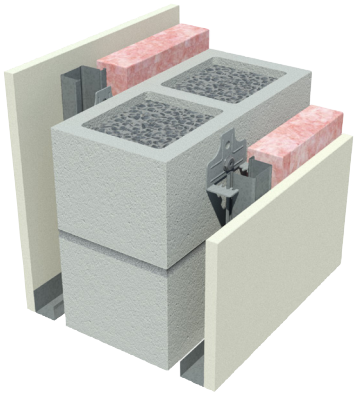

- [Side 2] Plasterboard as specified in table fixed to furring channels on clips
- Masonry wall as specified in the table [refer to masonry manufacturer or relevant Australian Standard for FRL]
- [Side 2] Plasterboard as specified in table fixed to furring channels on clips

13mm **masta**shield can be substituted with 10mm **opal**, 10mm **sound**shield or 13mm **water**shield
13mm **fire**shield can be substituted with 13mm **multi**shield
13mm **sound**shield can be substituted with 13mm **tru**rock
16mm **fire**shield can be substituted with 16mm **multi**shield

Masonry Type	System	Plasterboard Lining	Sound Insulation Rw (Rw + Ctr)				
			Minimum 30mm cavity with Pink® Partition 25mm 24 kg/m³ R0.7		Minimum 50mm cavity with Pink® Partition 50mm 11 kg/m³ R1.2		
			Insulation in one cavity only	Insulation in both cavities	Insulation in one cavity only	Insulation in both cavities	
Minimum 150mm Concrete	PMW4253	[Side 1] 1 layer of 13mm **masta**shield [Side 2] 1 layer of 13mm **masta**shield	57 (47)	61 (**50**)	59 (49)	62 (**52**)	Reports 1021067-R01 3094-55 *Use Insulation in both cavities to achieve Rw + Ctr 50
	PMW4257	[Side 1] 1 layer of 13mm **sound**shield [Side 2] 1 layer of 13mm **sound**shield	59 (49)	63 (**52**)	63 (**52**)	64 (**54**)	
	PMW4261	[Side 1] 1 layer of 13mm **fire**shield [Side 2] 1 layer of 13mm **fire**shield	58 (48)	62 (**51**)	62 (**51**)	63 (**53**)	
	PMW4266	[Side 1] 1 layer of 16mm **fire**shield [Side 2] 1 layer of 16mm **fire**shield	59 (49)	63 (**52**)	63 (**52**)	64 (**54**)	
Minimum 200mm Concrete	PMW4303	[Side 1] 1 layer of 13mm **masta**shield [Side 2] 1 layer of 13mm **masta**shield	60 (**50**)	64 (**53**)	64 (**53**)	65 (**54**)	
	PMW4307	[Side 1] 1 layer of 13mm **sound**shield [Side 2] 1 layer of 13mm **sound**shield	62 (**52**)	66 (**55**)	66 (**55**)	67 (**56**)	
	PMW4311	[Side 1] 1 layer of 13mm **fire**shield [Side 2] 1 layer of 13mm **fire**shield	61 (**51**)	65 (**54**)	65 (**54**)	66 (**55**)	
	PMW4316	[Side 1] 1 layer of 16mm **fire**shield [Side 2] 1 layer of 16mm **fire**shield	62 (**52**)	66 (**55**)	66 (**55**)	67 (**56**)	

PMW5000

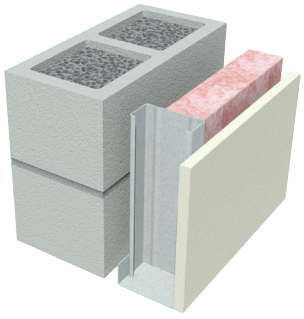

- [Side 1] Left bare
- Masonry wall as specified in table [refer to masonry manufacturer for FRL]
- Minimum 20mm air gap
- [Side 2] 1 layer of Plasterboard as specified in table fixed to minimum 64mm steel studs or 70mm timber studs

13mm **masta**shield can be substituted with 10mm **opal**, 10mm **sound**shield or 13mm **water**shield

Masonry Type	System	Plasterboard Lining	Sound Insulation Rw (Rw + Ctr)		
			No Insulation	Pink® Partition 50mm 11 kg/m³ R1.2	Reports
Minimum 140mm core - filled Concrete Block Minimum laid weight 280 kg/m²	PMW5151	[Side 2] 13mm **masta**shield	51 (44)	58 (**50**)	1021067-R01 Note: Impact Sound Resistant - Discontinuous Construction
Minimum 150mm Concrete	PMW5251	[Side 2] 13mm **masta**shield	52 (46)	59 (**52**)	

PMW6000

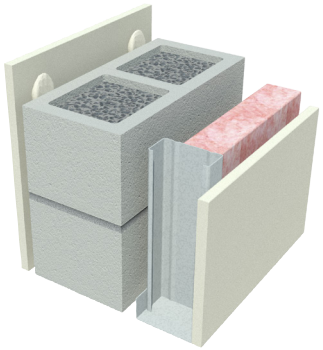

- [Side 1] 1 layer of 13mm mastashield adhered with mastabond Masonry Adhesive
- Masonry wall as specified in the table [refer to masonry manufacturer or relevant Australian Standard for FRL]
- Minimum 20mm air gap
- [Side 2] 1 layer of Plasterboard fixed to wall studs as specified in table

13mm **masta**shield can be substituted with 13mm **water**shield on the stud side
13mm **masta**shield can be substituted with 10mm **opal** or 10mm **sound**shield
13mm **fire**shield can be substituted with 13mm **multi**shield
13mm **masta**shield adhered to concrete blocks/concrete can be substituted with 13mm render
13mm **sound**shield can be substituted with 13mm **tru**rock

Masonry Type	System	Plasterboard Lining	Sound Insulation Rw (Rw + Ctr)		
			Pink® Partition 50mm 11 kg/m³ R1.2		
			51mm steel stud	Minimum 64mm steel stud or 70mm timber stud	
Minimum 110mm Brick Minimum laid weight 160 kg/m²	PMW6053	[Side 2] 13mm **masta**shield	53 (45)	54 (45)	Reports 1021067-R01 4738-15 [1]3094A-6 Note: Impact Sound Resistant - Discontinuous Construction
	PMW6069	[Side 2] 13mm **sound**shield	55 (47)	56 (47)	
	PMW6070	[Side 2] 13mm **fire**shield	54 (46)	55 (46)	
Minimum 140mm unfilled Concrete Block Minimum laid weight 180 kg/m²	PMW6453	[Side 2] 13mm **masta**shield	57 (49)	59 (**51**)[1]	
	PMW6469	[Side 2] 13mm **sound**shield	60 (**52**)	61 (**53**)	
	PMW6470	[Side 2] 13mm **fire**shield	59 (**51**)	60 (**52**)	
Minimum 140mm core - filled Concrete Block Minimum laid weight 280 kg/m²	PMW6153	[Side 2] 13mm **masta**shield	62 (**53**)	63 (**54**)	
	PMW6169	[Side 2] 13mm **sound**shield	64 (**55**)	65 (**56**)	
	PMW6170	[Side 2] 13mm **fire**shield	63 (**54**)	64 (**55**)	
Minimum 190mm core - filled Concrete Block Minimum laid weight 380 kg/m²	PMW6203	[Side 2] 13mm **masta**shield	63 (**54**)	64 (**55**)	
	PMW6219	[Side 2] 13mm **sound**shield	65 (**56**)	66 (**56**)	
	PMW6220	[Side 2] 13mm **fire**shield	64 (**55**)	65 (**56**)	
Minimum 150mm Concrete	PMW6253	[Side 2] 13mm **masta**shield	63 (**54**)	64 (**55**)	
	PMW6269	[Side 2] 13mm **sound**shield	65 (**56**)	66 (**57**)	
	PMW6270	[Side 2] 13mm **fire**shield	64 (**55**)	65 (**56**)	
Minimum 200mm Concrete	PMW6303	[Side 2] 13mm **masta**shield	66 (**57**)	66 (**57**)	
	PMW6319	[Side 2] 13mm **sound**shield	68 (**59**)	68 (**59**)	
	PMW6320	[Side 2] 13mm **fire**shield	67 (**58**)	67 (**58**)	

PMW7000

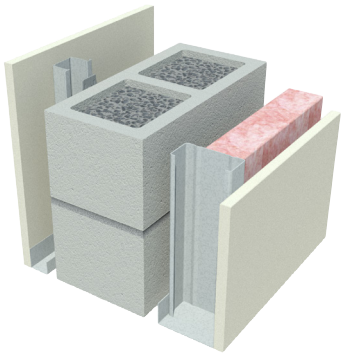

- [Side 1] Plasterboard as specified in table fixed to furring channels on clips with minimum 21mm cavity
- Masonry wall as specified in table [refer to masonry manufacturer for FRL]
- Minimum 20mm air gap
- [Side 2] Plasterboard fixed to wall studs as specified in table

13mm **masta**shield can be substituted with 10mm **opal**, 10mm **sound**shield or 13mm **water**shield
13mm **fire**shield can be substituted with 13mm **multi**shield
13mm **sound**shield can be substituted with 13mm **tru**rock

Masonry Type	System	Plasterboard Lining	Sound Insulation Rw (Rw + Ctr)		
			Insulation in stud cavity only Pink® Partition 50mm 11 kg/m³ R1.2		
			51mm steel stud	Minimum 64mm steel stud or 70mm timber stud	
Minimum 110mm Brick Minimum laid weight 160 kg/m²	PMW7053	[Side 1] 1 layer of 13mm **masta**shield [Side 2] 1 layer of 13mm **masta**shield	57 (44)	58 (45)	Reports 1021067-R01 3094-55 4738-15 [1]3094A-2 Note: Impact Sound Resistant - Discontinuous Construction
	PMW7057	[Side 1] 1 layer of 13mm **sound**shield [Side 2] 1 layer of 13mm **sound**shield	59 (46)	60 (47)	
	PMW7061	[Side 1] 1 layer of 13mm **fire**shield [Side 2] 1 layer of 13mm **fire**shield	58 (45)	59 (46)	
Minimum 140mm unfilled Concrete Block Minimum laid weight 180 kg/m²	PMW7453	[Side 1] 1 layer of 13mm **masta**shield [Side 2] 1 layer of 13mm **masta**shield	58 (49)	60 (**51**)	
	PMW7454	[Side 1] 1 layer of 13mm **masta**shield [Side 2] 2 layers of 13mm **masta**shield	61 (**52**)	62 (**53**)	
	PMW7457	[Side 1] 1 layer of 13mm **sound**shield [Side 2] 1 layer of 13mm **sound**shield	60 (**51**)	61 (**52**)	
	PMW7461	[Side 1] 1 layer of 13mm **fire**shield [Side 2] 1 layer of 13mm **fire**shield	60 (**50**)	61 (**51**)[1]	
Minimum 140mm core - filled Concrete Block Minimum laid weight 280 kg/m²	PMW7153	[Side 1] 1 layer of 13mm **masta**shield [Side 2] 1 layer of 13mm **masta**shield	59 (**50**)	60 (**51**)	
	PMW7157	[Side 1] 1 layer of 13mm **sound**shield [Side 2] 1 layer of 13mm **sound**shield	61 (**52**)	62 (**53**)	
	PMW7161	[Side 1] 1 layer of 13mm **fire**shield [Side 2] 1 layer of 13mm **fire**shield	60 (**51**)	61 (**52**)	
Minimum 190mm core - filled Concrete Block Minimum laid weight 380 kg/m²	PMW7203	[Side 1] 1 layer of 13mm **masta**shield [Side 2] 1 layer of 13mm **masta**shield	62 (**53**)	63 (**53**)	
	PMW7207	[Side 1] 1 layer of 13mm **sound**shield [Side 2] 1 layer of 13mm **sound**shield	64 (**55**)	65 (**55**)	
	PMW7211	[Side 1] 1 layer of 13mm **fire**shield [Side 2] 1 layer of 13mm **fire**shield	63 (**54**)	64 (**54**)	
Minimum 150mm Concrete	PMW7253	[Side 1] 1 layer of 13mm **masta**shield [Side 2] 1 layer of 13mm **masta**shield	60 (**51**)	61 (**51**)	
	PMW7257	[Side 1] 1 layer of 13mm **sound**shield [Side 2] 1 layer of 13mm **sound**shield	62 (**53**)	63 (**53**)	
	PMW7261	[Side 1] 1 layer of 13mm **fire**shield [Side 2] 1 layer of 13mm **fire**shield	61 (**52**)	62 (**53**)	
Minimum 200mm Concrete	PMW7303	[Side 1] 1 layer of 13mm **masta**shield [Side 2] 1 layer of 13mm **masta**shield	68 (**56**)	68 (**57**)	
	PMW7307	[Side 1] 1 layer of 13mm **sound**shield [Side 2] 1 layer of 13mm **sound**shield	70 (**58**)	70 (**59**)	
	PMW7311	[Side 1] 1 layer of 13mm **fire**shield [Side 2] 1 layer of 13mm **fire**shield	69 (**57**)	69 (**58**)	

PMW8000

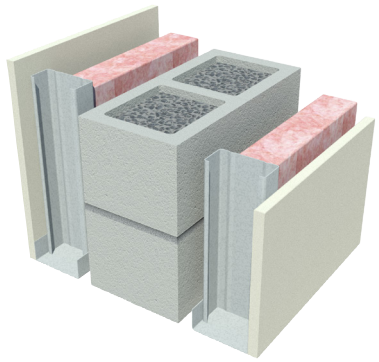

- [Side 1] 1 layer of Plasterboard as specified in table fixed to minimum 64mm steel studs or 70mm timber studs
- Minimum 20mm air gap
- Masonry wall as specified in table [refer to masonry manufacturer for FRL]
- Minimum 20mm air gap
- [Side 2] 1 layer of Plasterboard as specified in table fixed to minimum 64mm steel studs or 70mm timber studs

13mm **masta**shield can be substituted with 10mm **opal**, 10mm **sound**shield or 13mm **water**shield
13mm **fire**shield can be substituted with 13mm **multi**shield
13mm **sound**shield can be substituted with 13mm **tru**rock

Masonry Type	System	Plasterboard Lining	Sound Insulation Rw (Rw + Ctr)		
			Pink® Partition 50mm 11 kg/m³ R1.2		
			Insulation in one stud cavity only	Insulation in both cavities	
Minimum 90mm Brick Minimum laid weight 130 kg/m²	PMW8003	[Side 1] 13mm **masta**shield [Side 2] 13mm **masta**shield	58 (48)	60 (**50**)	Reports 1021067-R01 Note: Impact Sound Resistant - Discontinuous Construction
	PMW8007	[Side 1] 13mm **sound**shield [Side 2] 13mm **sound**shield	60 (**50**)	62 (**52**)	
	PMW8011	[Side 1] 13mm **fire**shield [Side 2] 13mm **fire**shield	59 (49)	61 (**51**)	
Minimum 110mm Brick Minimum laid weight 160 kg/m²	PMW8053	[Side 1] 13mm **masta**shield [Side 2] 13mm **masta**shield	59 (49)	61 (**51**)	
	PMW8057	[Side 1] 13mm **sound**shield [Side 2] 13mm **sound**shield	61 (**51**)	63 (**53**)	
	PMW8061	[Side 1] 13mm **fire**shield [Side 2] 13mm **fire**shield	60 (**50**)	62 (**52**)	
Minimum 140mm core - filled Concrete Block Minimum laid weight 280 kg/m²	PMW8153	[Side 1] 13mm **masta**shield [Side 2] 13mm **masta**shield	61 (**51**)	63 (**51**)	
	PMW8157	[Side 1] 13mm **sound**shield [Side 2] 13mm **sound**shield	63 (**53**)	65 (**55**)	
	PMW8161	[Side 1] 13mm **fire**shield [Side 2] 13mm **fire**shield	62 (**52**)	64 (**54**)	
Minimum 150mm Concrete	PMW8253	[Side 1] 13mm **masta**shield [Side 2] 13mm **masta**shield	65 (**55**)	67 (**57**)	
	PMW8257	[Side 1] 13mm **sound**shield [Side 2] 13mm **sound**shield	67 (**57**)	69 (**59**)	
	PMW8261	[Side 1] 13mm **fire**shield [Side 2] 13mm **fire**shield	66 (**56**)	68 (**58**)	

PMW101

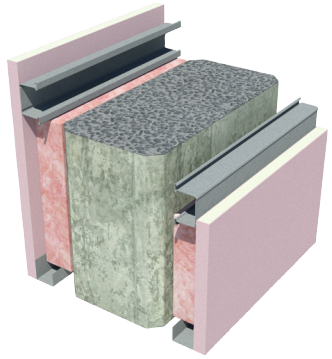

- [Side 1] 1 layer of 16mm fireshield
- Horizontal 28mm furring channel spanning across blade column
- Minimum 20mm air gap
- Concrete Blade Column
- Minimum 20mm air gap
- Horizontal 28mm furring channel spanning across blade column
- [Side 2] 1 layer of 16mm fireshield

Refer to Section 3.1 for FRL and Construction Details
16mm **fire**shield can be substituted with 16mm **multi**shield or 16mm **tru**rock

Masonry Type	System	Sound Insulation Rw (Rw + Ctr)	
		Minimum 48mm cavities with Pink® Partition 50mm 11kg/m³ R1.2 in both cavities	Reports 1021067-R01
Minimum 150mm Concrete	PMW101	61 (**53**)	Note: Impact Sound Resistant - Discontinuous Construction

PMW102

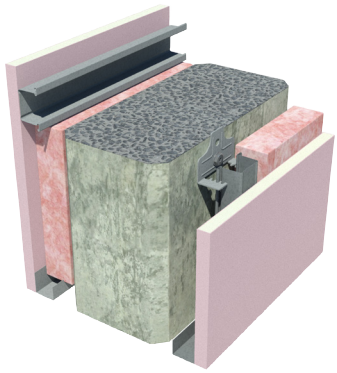

- [Side 1] 1 layer of 16mm fireshield
- Horizontal 28mm furring channel spanning across blade column
- Minimum 20mm air gap
- Concrete Blade Column
- Vertical furring channels on clips in a minimum 30mm cavity
- [Side 2] 1 layer of 16mm fireshield

Refer to Section 3.1 for FRL and Construction Details
16mm **fire**shield can be substituted with 16mm **multi**shield or 16mm **tru**rock
25mm 24 kg/m³ insulation can be substituted with 50mm 11 kg/m³ insulation for minimum 45mm cavities

Masonry Type	System	Sound Insulation Rw (Rw + Ctr)	
		Minimum 48mm cavity on one side and minimum 30mm cavity on the other with Pink® Partition 25mm 24kg/m³ R0.7 in both cavities	Reports 1021067-R01
Minimum 150mm Concrete	PMW102	60 (**52**)	Note: Impact Sound Resistant - Discontinuous Construction

PMW103

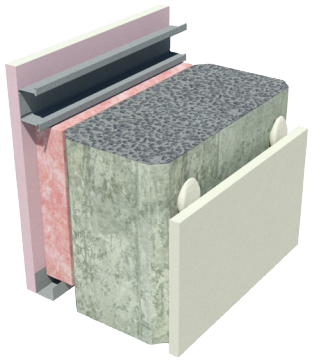

- [Side 1] 1 layer of 16mm fireshield
- Horizontal 28mm furring channel spanning across blade column
- Minimum 20mm air gap
- Concrete Blade Column
- [Side 2] 1 layer of 13mm mastashield adhered with mastabond Masonry Adhesive

Refer to Section 3.1 for FRL and Construction Details
13mm **masta**shield can be substituted with 13mm **water**shield on the stud side
13mm **masta**shield can be substituted with 10mm **opal** or 10mm **sound**shield
16mm **fire**shield can be substituted with 16mm **multi**shield or 16mm **tru**rock

Masonry Type	System	Sound Insulation Rw (Rw + Ctr)	
		Minimum 48mm cavity on furring channel side with Pink® Partition 50mm 11kg/m³ R1.2	Reports 1021067-R01
Minimum 150mm Concrete	PMW103	58 (**50**)	Note: Impact Sound Resistant - Discontinuous Construction

PMW16

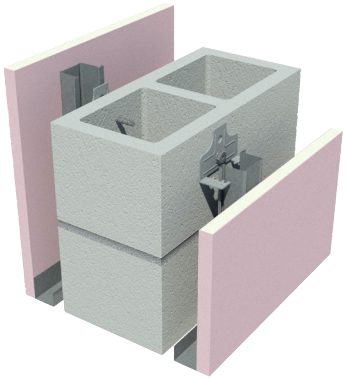

- 1 layer of 16mm fireshield on furring channels
- Existing masonry wall [refer to masonry manufacturer for FRL]
- 1 layer of 16mm fireshield on furring channels

This system is designed to upgrade the FRL of the masonry wall
Total Integrity and Total Insulation cannot be greater than Total Structural Adequacy
fireshield can be substituted with **multi**shield or **tru**rock

Additional FRL to Masonry (minutes)			
Masonry Structural Adequacy + 30	Masonry Integrity + 60	Masonry Insulation + 60	Rated from both sides Report FAR2221

PMW13

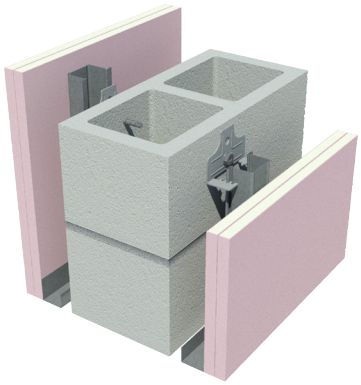

- 2 layers of 13mm fireshield on furring channels
- Existing masonry wall [refer to masonry manufacturer for FRL]
- 2 layers of 13mm fireshield on furring channels

This system is designed to upgrade the FRL of the masonry wall
Total Integrity and Total Insulation cannot be greater than Total Structural Adequacy
fireshield can be substituted with **multi**shield or **tru**rock

Additional FRL to Masonry (minutes)			
Masonry Structural Adequacy + 60	Masonry Integrity + 120	Masonry Insulation + 120	Rated from both sides Report FAR2221

PMW18

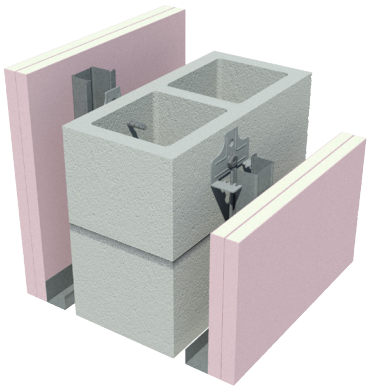

- 2 layers of 16mm fireshield on furring channels
- Existing masonry wall [refer to masonry manufacturer for FRL]
- 2 layers of 16mm fireshield on furring channels

This system is designed to upgrade the FRL of the masonry wall
Total Integrity and Total Insulation cannot be greater than Total Structural Adequacy
fireshield can be substituted with **multi**shield or **tru**rock

Additional FRL to Masonry (minutes)			
Masonry Structural Adequacy + 90	Masonry Integrity + 180	Masonry Insulation + 180	Rated from both sides Report FAR2221

PMW14

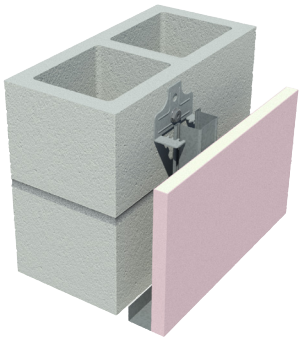

- Existing masonry wall [refer to masonry manufacturer for FRL]
- 1 layer of 16mm fireshield on furring channels

This system is designed to upgrade the FRL of the masonry wall
Total Integrity and Total Insulation cannot be greater than Total Structural Adequacy
fireshield can be substituted with **multi**shield or **tru**rock

Additional FRL to Masonry (minutes)				
Fireshield on the **EXPOSED** side to fire	Masonry Structural Adequacy + 30	Masonry Integrity + 30	Masonry Insulation + 30	Report FAR2464
Fireshield on the **UNEXPOSED** side to fire	Masonry Structural Adequacy + 0	Masonry Integrity + 30	Masonry Insulation + 30	

PMW10

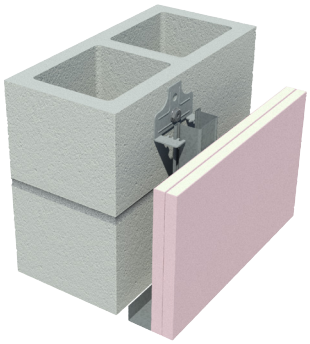

- Existing masonry wall [refer to masonry manufacturer for FRL]
- 2 layers of 13mm fireshield on furring channels

This system is designed to upgrade the FRL of the masonry wall
Total Integrity and Total Insulation cannot be greater than Total Structural Adequacy
fireshield can be substituted with **multi**shield or **tru**rock

Additional FRL to Masonry (minutes)				
Fireshield on the **EXPOSED** side to fire	Masonry Structural Adequacy + 60	Masonry Integrity + 60	Masonry Insulation + 60	Report FAR2464
Fireshield on the **UNEXPOSED** side to fire	Masonry Structural Adequacy + 0	Masonry Integrity + 60	Masonry Insulation + 60	

PMW15

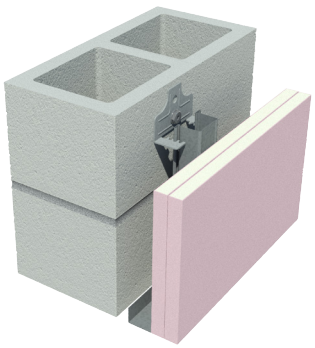

- Existing masonry wall [refer to masonry manufacturer for FRL]
- 2 layers of 16mm fireshield on furring channels

This system is designed to upgrade the FRL of the masonry wall
Total Integrity and Total Insulation cannot be greater than Total Structural Adequacy
fireshield can be substituted with **multi**shield or **tru**rock

Additional FRL to Masonry (minutes)				
Fireshield on the **EXPOSED** side to fire	Masonry Structural Adequacy + 90	Masonry Integrity + 90	Masonry Insulation + 90	Report FAR2464
Fireshield on the **UNEXPOSED** side to fire	Masonry Structural Adequacy + 0	Masonry Integrity + 90	Masonry Insulation + 90	

ACW2 - ACW4

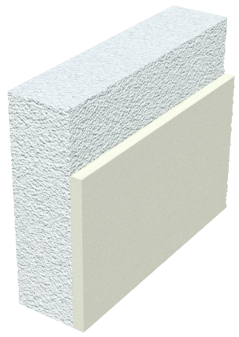

- [Side 1] Left bare
- 75mm AAC Panel, minimum dry weight 37.5 kg/m² [refer to manufacturer for FRL]
- [Side 2] 1 layer of Plasterboard as specified in table fixed with laminating screws

Plasterboard Lining	System	Wall Width (mm)	Sound Insulation Rw (Rw + Ctr)	
			No insulation	Reports
[Side 2] 10mm **masta**shield	ACW2	85	38 (36)	Day Design 5008-10.1R 5008-17.1R
[Side 2] 10mm **water**shield	ACW3	85	39 (36)	
[Side 2] 13mm **masta**shield	ACW4	88	39 (36) [1]	[1]TL548-10

ACW21 - ACW22

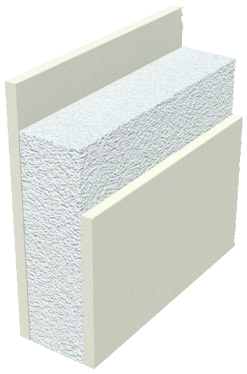

- [Side 1] 1 layer of Plasterboard as specified in table fixed with laminating screws
- 75mm AAC Panel, minimum dry weight 37.5 kg/m² [refer to manufacturer for FRL]
- [Side 2] 1 layer of Plasterboard as specified in table fixed with laminating screws

Plasterboard Lining	System	Wall Width (mm)	Sound Insulation Rw (Rw + Ctr)	
			No insulation	Reports
[Side 1] 10mm **masta**shield [Side 2] 10mm **masta**shield	ACW21	95	40 (38)	Day Design 5008-10.1R 5008-17.1R
[Side 1] 10mm **water**shield [Side 2] 10mm **water**shield	ACW22	95	41 (39)	

ACW41 - ACW43

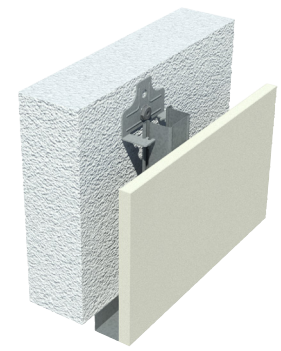

- [Side 1] Left bare
- 75mm AAC Panel, minimum dry weight 37.5 kg/m² [refer to manufacturer for FRL]
- [Side 2] Plasterboard as specified in table fixed to furring channels on clips

fireshield can be substituted with **multi**shield or **tru**rock

Plasterboard Lining	System	Sound Insulation Rw (Rw + Ctr)			
		Minimum 30mm cavity		Minimum 50mm cavity	Reports
		No Insulation	Pink® Partition 25mm 24 kg/m³ R0.7	Pink® Partition 50mm 11 kg/m³ R1.2	
[Side 2] 10mm **masta**shield	ACW41	42 (36)	-	-	Day Design 5008-10.1R 5008-17.1R [2]TL548-8 [3]TL548-6
[Side 2] 10mm **water**shield	ACW42	-	51 (40)	53 (41) [2]	
[Side 2] 13mm **fire**shield	ACW43	-	52 (43)	55 (45) [3]	

ACW61 - ACW62

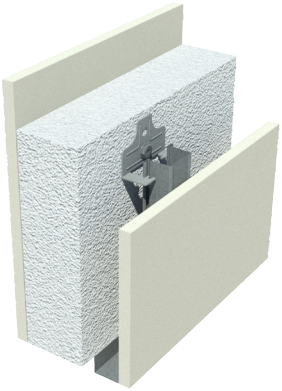

- [Side 1] Plasterboard as specified in table fixed with laminating screws
- 75mm AAC Panel, minimum dry weight 37.5 kg/m² [refer to manufacturer for FRL]
- [Side 2] Plasterboard as specified in table fixed to furring channels on clips

13mm **masta**shield can be substituted with 10mm **water**shield

Side 1 and 2 Plasterboard Lining	System	Sound Insulation Rw (Rw + Ctr)			
		Minimum 30mm cavity		Minimum 50mm cavity	Reports
		No Insulation	Pink® Partition 25mm 24 kg/m³ R0.7	Pink® Partition 50mm 11 kg/m³ R1.2	
[Side 1] 13mm **masta**shield [Side 2] 13mm **masta**shield	ACW61	-	52 (40)	54 (41) [4]	Day Design 5008-10.1R 5008-17.1R [4]TL548-7
[Side 1] 13mm **fire**shield [Side 2] 13mm **fire**shield	ACW62	-	54 (41)	-	

ACW81 - ACW82

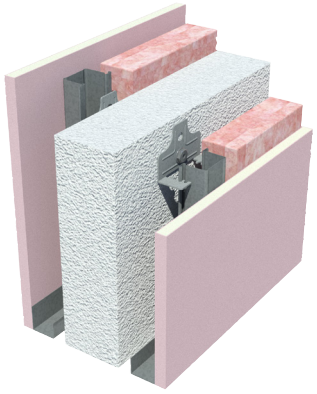

- [Side 1] Plasterboard as specified in table fixed to furring channels on clips
- 75mm AAC Panel, minimum dry weight 37.5 kg/m2 [refer to manufacturer for FRL]
- [Side 2] Plasterboard as specified in table fixed to furring channels on clips

mastashield can be substituted with **water**shield
fireshield can be substituted with **multi**shield or **tru**rock

Plasterboard Lining	System	Wall Width (mm)	Sound Insulation Rw (Rw + Ctr)		
			Minimum 30mm cavity with Pink® Partition 25mm 24 kg/m³ R0.7	Minimum 50mm cavity with Pink® Partition 50mm 11 kg/m³ R1.2	Reports
			Insulation in both cavities	Insulation in both cavities	Day Design 5008-10.1R 5008-17.1R
[Side 1] 13mm **masta**shield [Side 2] 13mm **masta**shield	ACW81	161	56 (43)	-	
[Side 1] 16mm **fire**shield [Side 2] 16mm **fire**shield	ACW82	207	-	63 (**51**)	

ACW101 - ACW103

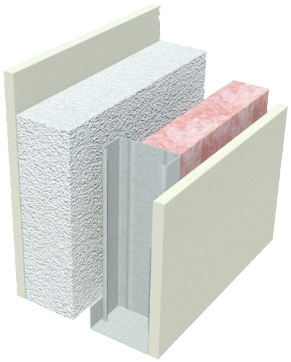

- [Side 1] Plasterboard as specified in table fixed with laminating screws
- 75mm AAC Panel, minimum dry weight 37.5 kg/m² [refer to manufacturer for FRL]
- Minimum 20mm air gap
- [Side 2] Plasterboard as specified in table fixed to minimum 64mm steel studs

mastashield can be substituted with **water**shield
fireshield can be substituted with **multi**shield or **tru**rock

Plasterboard Lining	System	Wall Width (mm)	Sound Insulation Rw (Rw + Ctr)	
			Pink® Partition 50mm 11 kg/m³ R1.2	Reports
[Side 1] 10mm **masta**shield [Side 2] 10mm **masta**shield	ACW101	179	56 (47)	Day Design 5008-10.1R 5008-17.1R [5]TL548-9 Note: Impact Sound Resistant - Discontinuous Construction
[Side 1] 13mm **masta**shield [Side 2] 13mm **masta**shield	ACW102	185	59 (**50**) [5]	
[Side 1] 13mm **fire**shield [Side 2] 13mm **fire**shield	ACW103	185	62 (**54**)	

ACW125 - ACW126

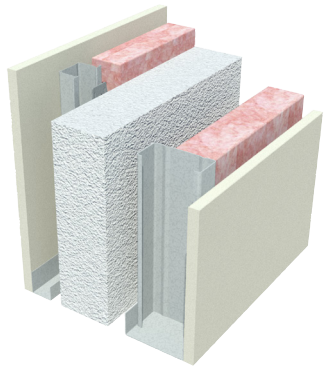

- [Side 1] Minimum 43mm cavity with 1 layer as specified in table fixed to furring channels on clips
- 75mm AAC Panel, minimum dry weight 37.5 kg/m² [refer to manufacturer for FRL]
- Minimum 35mm air gap
- [Side 2] 1 layer as specified in table fixed to minimum 64mm steel studs

mastashield can be substituted with **water**shield

Plasterboard Lining	System	Minimum Cavity Size (mm)	Sound Insulation Rw (Rw + Ctr)	
			Pink® Partition 50mm 14 kg/m³ R1.3 in furring channel cavity and Pink® Partition 75mm 14 kg/m³ R1.9 in stud cavity	Reports TM459-01F01
[Side 1] 13mm **masta**shield [Side 2] 13mm **masta**shield	ACW125	[Side 1] 43mm [Side 2] 99mm (64mm steel stud + 35mm air-gap)	60 (**50**)	Note: Impact Sound Resistant - Discontinuous Construction
[Side 1] 9mm Villaboard™ [Side 2] 9mm Villaboard™	ACW126	[Side 1] 43mm [Side 2] 99mm (64mm steel stud + 35mm air-gap)	64 (**53**)	

ACW121 - ACW124

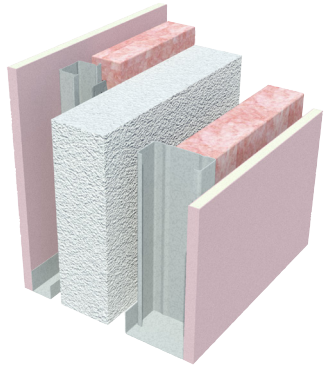

- [Side 1] 1 layer of Plasterboard as specified in table fixed to furring channels on clips
- 75mm AAC Panel, minimum dry weight 37.5 kg/m² [refer to manufacturer for FRL]
- Minimum air gap as specified in table
- [Side 2] 1 layer of Plasterboard as specified in table fixed to minimum 64mm steel studs

mastashield can be substituted with **water**shield
fireshield can be substituted with **multi**shield or **tru**rock

Plasterboard Lining	System	Minimum Cavity Size (mm)	Sound Insulation Rw (Rw + Ctr)		
			Pink® Partition 50mm 11 kg/m³ R1.2		
			Insulation in stud cavity only	Insulation in both cavities	Reports Day Design 5008-10.1R 5008-17.1R [6]TL548-5
[Side 1] 10mm **masta**shield [Side 2] 10mm **masta**shield	ACW121	[Side 1] 30mm [Side 2] 84mm (64mm steel stud + 20mm air-gap)	53 (42)	-	Note: Impact Sound Resistant - Discontinuous Construction
[Side 1] 13mm **fire**shield [Side 2] 13mm **fire**shield	ACW122	[Side 1] 30mm [Side 2] 84mm (64mm steel stud + 20mm air-gap)	58 (46)	-	
[Side 1] 13mm **fire**shield [Side 2] 13mm **fire**shield	ACW123	[Side 1] 45mm [Side 2] 99mm (64mm steel stud + 35mm air-gap)	-	62 (**51**) [6]	
[Side 1] 13mm **fire**shield [Side 2] 16mm **fire**shield	ACW124	[Side 1] 30mm [Side 2] 99mm (64mm steel stud + 35mm air-gap)	-	60 (**50**)	

ACW141 - ACW145

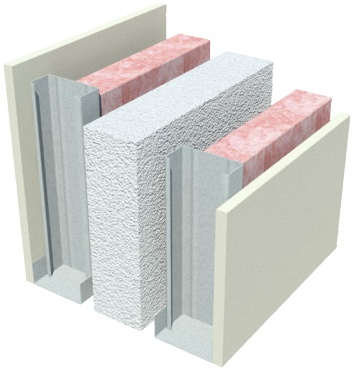

- [Side 1] 1 layer of Plasterboard as specified in table fixed to minimum 64mm steel studs
- Minimum 20mm air gap
- 75mm AAC Panel, minimum dry weight 37.5 kg/m² [refer to manufacturer for FRL]
- Minimum 20mm air gap
- [Side 2] 1 layer of Plasterboard as specified in table fixed to minimum 64mm steel studs

mastashield can be substituted with **water**shield

fireshield can be substituted with **multi**shield or **tru**rock

Plasterboard Lining	System	Sound Insulation Rw (Rw + Ctr)		
		Pink® Partition 50mm 11 kg/m³ R1.2		Reports
		Insulation in one cavity only	Insulation in both cavities	Day Design 5008-10.1R 5008-17.1R [7]TL548-3 Note: Impact Sound Resistant - Discontinuous Construction
[Side 1] 10mm **masta**shield [Side 2] 10mm **masta**shield	ACW141	63 (49)	-	
[Side 1] 13mm **masta**shield [Side 2] 13mm **masta**shield	ACW142	65 (**50**)	-	
[Side 1] 13mm **fire**shield [Side 2] 13mm **fire**shield	ACW143	66 (**53**)	-	
[Side 1] 13mm **masta**shield [Side 2] 13mm **masta**shield	ACW144	-	66 (**53**) [7]	
[Side 1] 13mm **fire**shield [Side 2] 13mm **fire**shield	ACW145	-	68 (**56**)	

ACW161

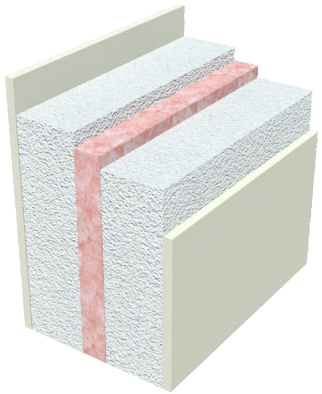

- [Side 1] 1 layer of Plasterboard as specified in table fixed with laminating screws
- 75mm AAC Panel, minimum dry weight 37.5 kg/m² [refer to manufacturer for FRL]
- Minimum 30mm air gap filled with Pink® Partition 50mm 11 kg/m³ R1.2
- 75mm AAC Panel, minimum dry weight 37.5 kg/m² [refer to manufacturer for FRL]
- [Side 2] 1 layer of Plasterboard as specified in table fixed with laminating screws

mastashield can be substituted with **water**shield

Plasterboard Lining	System	Wall Width (mm)	Sound Insulation Rw (Rw + Ctr)	
				Reports
[Side 1] 10mm **masta**shield [Side 2] 10mm **masta**shield	ACW161	200	61 (**55**)	Day Design 5008-10.1R 5008-17.1R Note: Impact Sound Resistant - Discontinuous Construction

DCS-6.2, 6.3

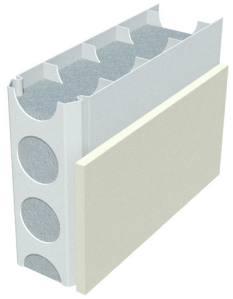

- [Side 1] As specified in table
- Dincel wall as specified in table [refer to Dincel for FRL]
- [Side 2] 1 layer of Plasterboard as specified in table fixed to Dincel

Dincel Wall	System	Plasterboard Lining	Sound Insulation Rw (Rw + Ctr)	
110mm Dincel	DCS110-6.2	[Side 1] Left bare, painted or rendered [Side 2] 10mm **masta**shield	45 (41)	Report Day Design 5880-1
	DCS110-6.3	[Side 1] 10mm **masta**shield [Side 2] 10mm **masta**shield	45 (41)	
155mm Dincel	DCS155-6.2	[Side 1] Left bare, painted or rendered [Side 2] 13mm **masta**shield	50 (45)	Report Day Design 5880-4
	DCS155-6.3	[Side 1] 13mm **masta**shield [Side 2] 13mm **masta**shield	50 (45)	
200mm Dincel	DCS200-6.2	[Side 1] Left bare, painted or rendered [Side 2] 10mm **masta**shield	51 (46)	Report Day Design 5880-3
	DCS200-6.3	[Side 1] 10mm **masta**shield [Side 2] 10mm **masta**shield	51 (46)	

DCS-6.4, 6.7, 6.8, 6.9, 6.11, 10, 11

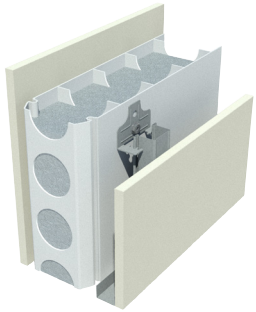

- [Side 1] As specified in table
- Dincel wall as specified in table [refer to Dincel for FRL]
- [Side 2] 1 layer of Plasterboard as specified in table fixed to furring channels on clips

mastashield can be substituted with **water**shield
fireshield can be substituted with **multi**shield or **tru**rock

Dincel Wall	System	Plasterboard Lining	Sound Insulation Rw (Rw + Ctr)			
			Minimum 30mm cavity No insulation	**Minimum 30mm cavity*** with Pink® Partition 25mm 24kg/m³ R0.7	**Minimum 50mm cavity** with Pink® Partition 50mm 11 kg/m³ R1.2	
110mm Dincel	DCS110-6.4	[Side 1] 13mm **masta**shield [Side 2] 13mm **masta**shield	45 (42)	-	-	Report Day Design 5880-1 [1]TL557-12 [2]TL557-11
	DCS110-10	[Side 1] Left bare [Side 2] 10mm **masta**shield	-	55 (44) [2]	-	
	DCS110-11	[Side 1] Left bare [Side 2] 10mm **masta**shield	48 (41) [1]	-	-	
	DCS110-6.9	[Side 1] 13mm **masta**shield [Side 2] 16mm **fire**shield	-	-	55 (**50**)	
155mm Dincel	DCS155-6.4	[Side 1] 10mm **masta**shield [Side 2] 10mm **masta**shield	48 (43)	-	-	Report Day Design 5880-4
	DCS155-6.8	[Side 1] 16mm **fire**shield [Side 2] 16mm **fire**shield	50 (43)	-	-	
	DCS155-6.7	[Side 1] 10mm **masta**shield [Side 2] 10mm **masta**shield	-	55 (48)	-	
	DCS155-6.11	[Side 1] 13mm **masta**shield [Side 2] 13mm **masta**shield	-	56 (**50**) *in 40mm cavity	-	
200mm Dincel	DCS200-6.9	[Side 1] 10mm **masta**shield [Side 2] 10mm **masta**shield	53 (46)	-	-	Report Day Design 5880-3
	DCS200-6.11	[Side 1] 10mm **masta**shield [Side 2] 10mm **masta**shield	-	57 (**50**)	-	

DCS-6.6, 6.8, 6.10, 6.11, 6.13, 8

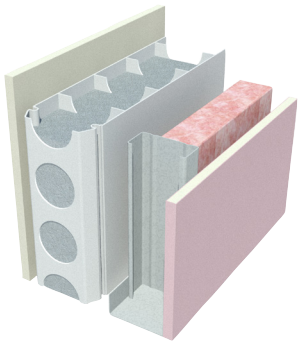

- [Side 1] As specified in table
- Dincel wall as specified in table [refer to Dincel for FRL]
- Minimum 20mm air gap
- [Side 2] Plasterboard fixed to steel studs as specified in table

mastashield can be substituted with **water**shield
fireshield can be substituted with **multi**shield or **tru**rock

Dincel Wall	System	Plasterboard Lining	Minimum Cavity Size (mm)	Sound Insulation Rw (Rw + Ctr)		
				No insulation	Pink® Partition 50mm 11 kg/m³ R1.2	
110mm Dincel	DCS110-6.8	[Side 1] Left bare, painted or rendered [Side 2] 10mm **masta**shield	71mm (51mm steel stud + 20mm air gap)	51 (43) [3]	-	Report Day Design 5880-1 [3]TL557-10 [4]TL557-9 Note: Impact Sound Resistant - Discontinuous Construction
			84mm (64mm steel stud + 20mm air gap)	52 (44)	-	
	DCS110-6.11	[Side 1] 10mm **masta**shield [Side 2] 13mm **fire**shield	71mm (51mm steel stud + 20mm air gap)	-	57 (**50**)	
			84mm (64mm steel stud + 20mm air gap)	-	57 (**51**)	
	DCS110-8	[Side 1] 10mm **masta**shield [Side 2] 16mm **fire**shield	71mm (51mm steel stud + 20mm air gap)	-	56 (**51**) [4]	
155mm Dincel	DCS155-6.10	[Side 1] Left bare, painted or rendered [Side 2] 10mm **masta**shield	71mm (51mm steel stud + 20mm air gap)	54 (45)	-	Report Day Design 5880-4 Note: Impact Sound Resistant - Discontinuous Construction
			84mm (64mm steel stud + 20mm air gap)	56 (48)	-	
	DCS155-6.6	[Side 1] 10mm **masta**shield [Side 2] 10mm **masta**shield	71mm (51mm steel stud + 20mm air gap)	-	58 (**50**)	
			84mm (64mm steel stud + 20mm air gap)	-	58 (**51**)	
	DCS155-6.13	[Side 1] 13mm **masta**shield [Side 2] 13mm **masta**shield	71mm (51mm steel stud + 20mm air gap)	-	63 (**51**)	
			84mm (64mm steel stud + 20mm air gap)	-	64 (**52**)	
200mm Dincel	DCS200-6.10	[Side 1] Left bare, painted or rendered [Side 2] 10mm **masta**shield	71mm (51mm steel stud + 20mm air gap)	57 (47)	-	Report Day Design 5880-3 Note: Impact Sound Resistant - Discontinuous Construction
			84mm (64mm steel stud + 20mm air gap)	58 (48)	-	
	DCS200-6.13	[Side 1] 13mm **masta**shield [Side 2] 13mm **masta**shield	71mm (51mm steel stud + 20mm air gap)	-	65 (**56**)	
			84mm (64mm steel stud + 20mm air gap)	-	65 (**57**)	

DCS-6.5, 6.12, 6.13, 6.14

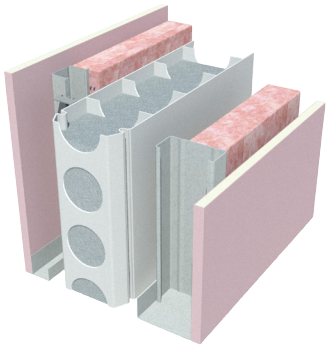

- [Side 1] 1 layer of Plasterboard as specified in table fixed to furring channels on clips with minimum 30mm cavity
- Dincel wall as specified in table [refer to Dincel for FRL]
- minimum 20mm air gap
- [Side 2] Plasterboard fixed to steel studs as specified in table

mastashield can be substituted with **water**shield

fireshield can be substituted with **multi**shield or **tru**rock

Dincel Wall	System	Plasterboard Lining	Minimum Cavity Size (mm)	Sound Insulation Rw (Rw + Ctr)		
				No insulation	Pink® Partition 25mm 24 kg/m³ R0.7 in furring channel cavity + Pink® Partition 50mm 11 kg/m³ R1.2 in stud cavity	
110mm Dincel	DCS110-6.5	[Side 1] 10mm **masta**shield [Side 2] 10mm **masta**shield	[Side 2] 71mm (51mm stud + 20mm air gap)	47 (41)	-	Report Day Design 5880-1 Note: Impact Sound Resistant - Discontinuous Construction
	DCS110-6.12	[Side 1] 13mm **fire**shield [Side 2] 13mm **fire**shield	[Side 2] 71mm (51mm stud + 20mm air gap)	-	62 (**50**)	
			[Side 2] 84mm (64mm stud + 20mm air gap)	-	63 (**52**)	
	DCS110-6.13	[Side 1] 16mm **fire**shield [Side 2] 2 layers of 16mm **fire**shield	[Side 2] 71mm (51mm stud + 20mm air gap)	-	66 (**55**)	
155mm Dincel	DCS155-6.5	[Side 1] 10mm **masta**shield [Side 2] 10mm **masta**shield	[Side 2] 71mm (51mm stud + 20mm air gap)	51 (43)	-	Report Day Design 5880-4 Note: Impact Sound Resistant - Discontinuous Construction
	DCS155-6.14-13	[Side 1] 13mm **fire**shield [Side 2] 13mm **fire**shield	[Side 2] 84mm (64mm stud + 20mm air gap)	-	70 (**55**)	
	DCS155-6.14-16	[Side 1] 16mm **fire**shield [Side 2] 16mm **fire**shield	[Side 2] 71mm (51mm stud + 20mm air gap)	-	69 (**55**)	
200mm Dincel	DCS200-6.5	[Side 1] 10mm **masta**shield [Side 2] 10mm **masta**shield	[Side 2] 71mm (51mm stud + 20mm air gap)	55 (46)	-	Report Day Design 5880-3 Note: Impact Sound Resistant - Discontinuous Construction
			[Side 2] 84mm (64mm stud + 20mm air gap)	55 (47)	-	
	DCS155-6.14-13	[Side 1] 13mm **fire**shield [Side 2] 13mm **fire**shield	[Side 2] 71mm (51mm stud + 20mm air gap)	-	68 (**53**)	
			[Side 2] 84mm (64mm stud + 20mm air gap)	-	69 (**55**)	
	DCS200-6.14-16	[Side 1] 16mm **fire**shield [Side 2] 16mm **fire**shield	[Side 2] 71mm (51mm stud + 20mm air gap)	-	70 (**56**)	
			[Side 2] 84mm (64mm stud + 20mm air gap)	-	71 (**58**)	

General Requirements

	Non-fire Rated	Fire Rated
Install control joints in plasterboard walls: > At 12m maximum intervals > At all control joints in the structure > At any change in the substrate	✓	✓
Only joint the face layer. As a minimum, use paper tape with any Siniat jointing compound applied in one or two coats to the thickness of two coats. Alternatively, use **bindex** fire and acoustic sealant according to the Product Data Sheet.		✓
Use approved fire rated penetration details. Fire penetrations may require fire collars or other devices to maintain fire performance.		✓
Use **bindex** fire and acoustic sealant on all gaps and around perimeter.		✓
Attach all fixtures to studs or purpose installed noggings. Wall anchors must not be fixed only to the plasterboard of fire rated walls.		✓

For acceptable modifications or variations to fire rated systems, refer to Section 2.3 Fire Resistance

Framing

	Non-fire Rated	Fire Rated
Framing members as per framing table or structural design up to 600mm maximum. Refer to Section 3.1 Internal Partition Walls for information on steel stud framing.	✓	✓

Table 1 Wall Furring Channel Span Table

Refer to Section 2.3 for assistance determining the relevant wind pressures for a specific project.

Furring Channels at 600mm maximum centres					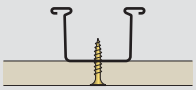	
Wind Region	Ultimate W_u (kPa)	Serviceability W_s (kPa) Deflection limited to Span/360	18mm Furring Channel (FC18)		28mm Furring Channel (FC28)	
			Span (mm)	Anchor Pull-out and Clip Demand (kN)	Span (mm)	Anchor Pull-out and Clip Demand (kN)
REGION A	0.39	0.25	800	0.24	1140	0.32
	0.47	0.3	750	0.27	1070	0.38
	0.54	0.35	710	0.29	1030	0.42
REGION B	0.59	0.25	740	0.33	1010	0.45
	0.71	0.3	710	0.38	960	0.51
	0.83	0.35	680	0.42	920	0.57

1. Table based upon self weight and lateral pressures, intended for internal use only. Other loads such as shelf loads, loads from ceilings, or live loads have not been considered.
2. Table refers to Siniat Furring Channel of Base Metal Thickness (BMT) 0.42mm of grade G550 steel with Zincalume™ AM150 corrosion protection.
3. Framing calculations based upon 2-or-more spans and designed in accordance with *AS/NZS 4600:2018 Cold Formed Steel Structures.*
4. Wind pressures determined in accordance with *AS/NZS 1170.2 Wind Actions.*
5. Connections to clips must be checked with the *Wall Clip Capacity Table.*
6. Ultimate Limit State Load Case 1: 1.2G + Wu
7. Serviceability Limit State Load Case 1: G + Ws, with deflection limited to Span/360.
8. When furring channel track is used, the first anchor must be 600mm from the track. If no furring channel track is used, then the first anchor must be 150mm maximum from ends. Refer to Construction Details.
9. Anchors for head and base tracks at 600mm maximum centres and 100mm maximum from ends with minimum 0.5 kN shear capacity.
10. Clips may need to be spaced at closer intervals for impact applications.
11. Furring channels cannot be spliced, therefore the maximum wall height using furring channels is 6.0m. Maximum production lengths available are 6.0m.
12. The nominated lateral pressures and deflection limits must be checked for suitability for a specific project.

Siniat Internal Wind Load Calculator

Refer to Section 2.3 for assistance determining the relevant internal wind pressures for a specific project. Or use the Siniat Internal Wind Load Calculator by clicking on the link or by using your phone's camera on the QR code.

Table 2 Wall Clip Capacity Table - Masonry Walls

Image	Name	Code	ULS Design Capacity (kN)
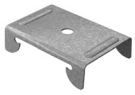	Furring Channel Anchor Clip (standard and wide versions)	C37-7H (7.5mm hole)	1.69
		CW37-7H (7.5mm hole)	
		C37-9H (9mm hole)	
		CW37-9H (9mm hole)	
	Furring Channel Resilient Mount Anchor Clip	C001 (7.5mm hole)	1.69
	Furring Channel Screw Adjustable Mount	CFCSAM	1.69
	Concrete to Stud Wall Mount	C001-DCS	4.00
	Grip Clip	CGRIP (7mm hole)	1.24 when fixed through hole closest to teeth
		CGRIP-9 (9mm hole)	
	Grip Clip Long	CGRIP-LONG (7mm hole)	0.69 when fixed through hole closest to teeth
		CGRIP-LONG9 (9mm hole)	
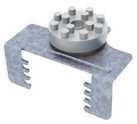	Grip Clip Resilient Mount	CGRIP-RES	0.47
	Grip Clip Resilient Mount Long	CGRIP-RESLONG	0.41
	Furring Channel Adjustable Mount	CFCAM	0.79
	Furring Channel Resilient Adjustable Mount	CFCRESAM	0.79

1. Clip capacities are applicable to Siniat products only.
2. Clip capacities determined in accordance with *AS/NZS 4600:2018 Cold Formed Steel Structures*, Section 8.2.
3. Suitable for internal use only.

Table 3 Cavity Size Table (mm)

Clip Image	Clip Name and Code	Leg Position	Cavity Size with 28mm Furring Channel	Cavity Size with 18mm Furring Channel
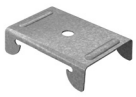	Furring Channel Anchor Clip 7.5mm hole C37-7H (standard) CW37-7H (wide version)	-	34	23
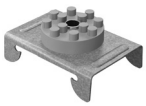	Furring Channel Resilient Mount 7.5mm hole C001	Completely wound in	44	33
	Grip Clip CGRIP	4	51	40
		3	45	34
		2	39	-
		1	33	-
	Grip Clip Long CGRIP-LONG	4	70	60
		3	64	54
		2	58	-
		1	52	-
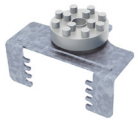	Grip Clip Resilient Mount CGRIP-RES	4	60	50
		3	54	44
		2	48	-
		1	42	-
	Grip Clip Resilient Mount Long CGRIP-RESLONG	4	80	70
		3	74	64
		2	68	-
		1	62	-
	Furring Channel Adjustable Mount CFCAM	4	48	37
		3	42	31
		2	36	-
		1	30	-
	Furring Channel Resilient Adjustable Mount CFCRESAM	4	58	48
		3	52	42
		2	46	-
		1	40	-

1. Cavity sizes are intended as a guide only.

> Plumbing and electrical services must not protrude beyond the face of the stud.

> Resilient mounts or direct fix clips with furring channel do not meet the requirements of 'discontinuous construction' for walls. Resilient mounts only meet the requirements of 'impact sound resistance'.

Plasterboard Layout

	Non-fire Rated	Fire Rated
Vertical joints must be 200mm minimum from the edge of any opening such as windows and doorways to minimise cracking at the joints.	✓	✓
Horizontal Layout		
Stagger butt joints in single layer systems by 300mm minimum on adjoining sheets.	✓	✓
Stagger butt joints in multilayer systems by 300mm minimum on adjoining sheets and between layers.	✓	✓
First layer butt joints must be backed by a stud, furring channel or back-blocked. Refer to installation diagrams.	✓	✓
Stagger recessed edges by 300mm minimum between layers.	✓	✓

> Install plasterboard sheets horizontally when practical to minimise stud twisting and reduce the effect of glancing light.

> Minimise butt joints by using long sheets.

Plasterboard Fixing

	Non-fire Rated	Fire Rated
Drive screws to just below the sheet surface, taking care not to break the paper linerboard. For over-driven screws, install another screw 20mm away. Leave or remove the over-driven screw and patch.	✓	✓
Laminating screws can be used to fix butt joints in the second and third layer.	✓	✓
Masonry Adhesive Method		
Use the masta**bond** Masonry Adhesive Method	✓	
Screw and Adhesive Method to Steel Studs and Furring Channels		
Apply masta**grip** Stud Adhesive after the frame is clean, dry, and free from grease, dust and other contaminants.	✓	
Apply masta**grip** daubs 200mm minimum from screws and plasterboard edges.	✓	
Screw Only Method to Steel Studs and Furring Channels		
Use the 'Screw Only Method' in tiled or fire rated areas. Stud adhesive is not permitted.	✓	✓
Laminating Screw Only Method		
Use 38mm - 10g laminating screws for Autoclaved Aerated Concrete.	✓	✓

Do not use the Masonry Adhesive method for:

- Masonry with a glazed surface finish
- Fire rated systems
- Multi-layer systems
- Walls over three metres high
- Pre-cast concrete panels that have a release agent on the surface reducing the effectiveness of the adhesive
- Walls where the surface deviation is above 25mm
- Walls that may become damp during service
- Walls that will have tiles or vinyl sheeting fixed to plasterboard.

The 'Screw and Adhesive Method' is recommended for non-fire rated applications. masta**grip** will:

- Minimise screw popping
- Reduce the number of screw heads that may show in glancing light
- Assist in compensating for frame irregularities.

Screw Type and Minimum Size for the Installation of Plasterboard to Steel

Plasterboard Thickness	1st Layer	2nd Layer	3rd Layer
6.5mm	6g x 25mm screw	6g x 25mm screw	-
10mm	6g x 25mm screw	6g x 41mm screw *	-
13mm	6g x 25mm screw	6g x 41mm screw *	8g x 57mm screw *
16mm	6g x 32mm screw	6g x 45mm screw *	8g x 65mm screw *

For steel ≤ 0.75mm BMT, use fine thread needle point screws.
For steel ≥ 0.75mm BMT, use fine thread drill point screws.
*10g x 38mm Laminating screws may be used as detailed in installation diagrams.

FIGURE 1 Non-Fire Rated 1 Layer - Horizontal
Masonry Adhesive Method

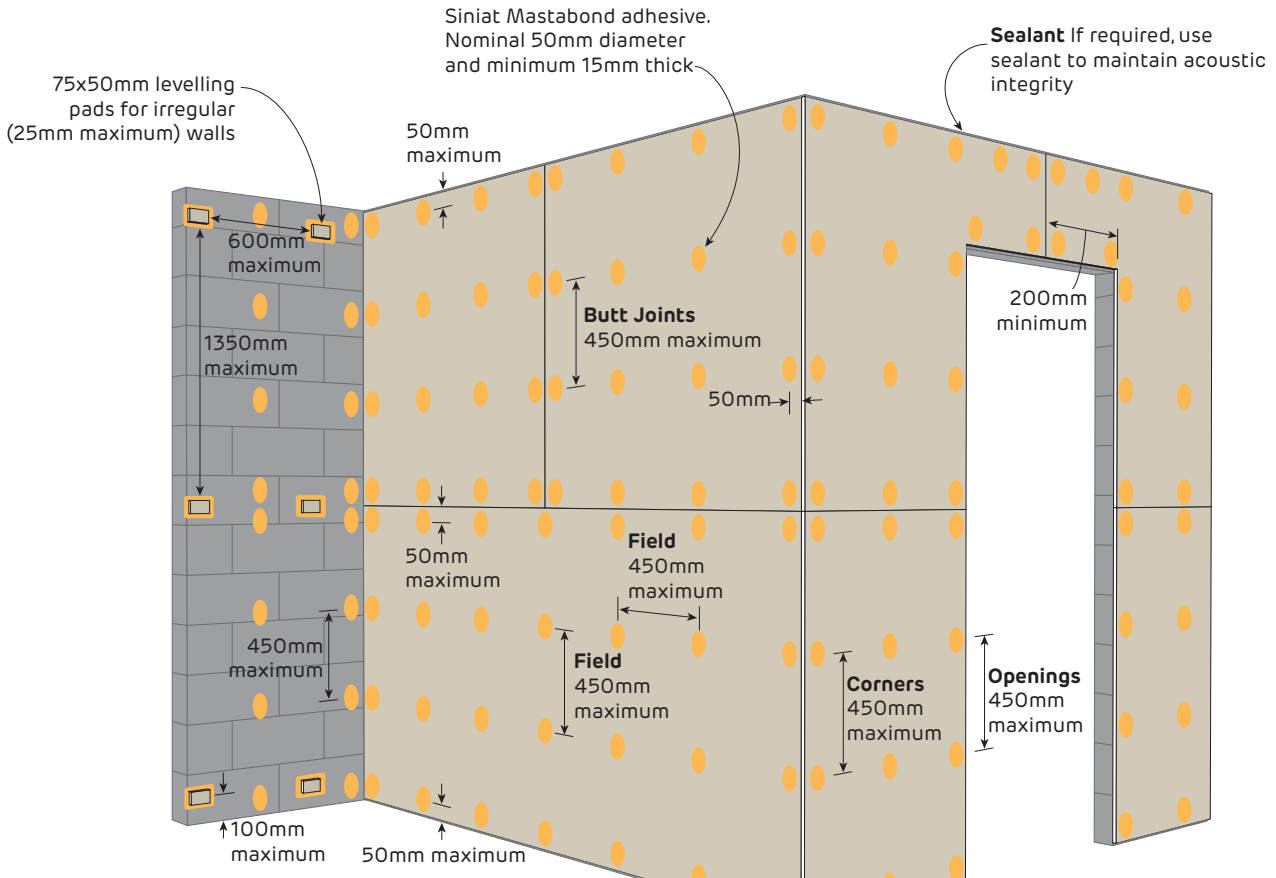

Masonry Adhesive Method is limited to 3m high walls and shall not be used when walls may become wet in-service

Fixing Pattern Table

Sheet Width	Fixing Pattern
600mm	A A A A (4)
900mm	A A A A (4)
1200mm	A A A A A (5)
1350mm	A A A A A (5)
1400mm	A A A A A (5)

A = Adhesive daub

Maximum Ultimate Limit State Wind Load Table (kPa)

Plasterboard Thickness	Maximum Adhesive Daub Column Spacing	
	450mm	300mm
10mm	0.95	1.40
13mm	1.05	1.60
16mm	1.05	1.60

1. Calculations do not include the substrate which must be independently designed to suit the desired loads.
2. If higher internal wind pressures are expected, please contact Siniat for specific design.

FIGURE 2 Non-Fire Rated 1 Layer - Horizontal
Screw and Adhesive Method over vertical furring channels

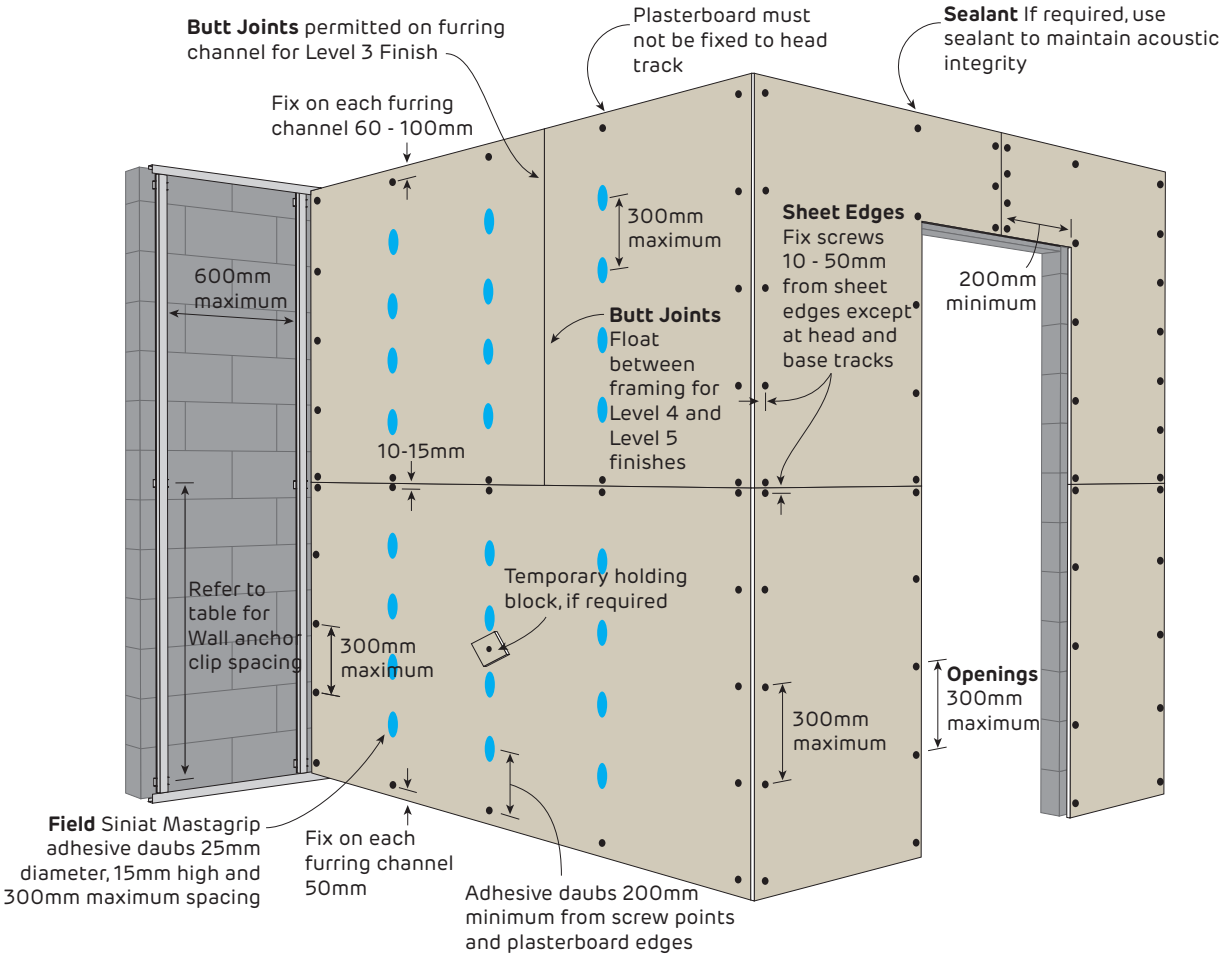

Fixing Pattern Table

Sheet Width	Fixing Pattern
600mm	S A A S
900mm	S A A A S
1200mm	S A A A A S
1350mm	S A A A A A S
1400mm	S A A A A A S

S = Screw
A = Adhesive daub

Maximum Ultimate Limit State Wind Load Table (kPa)

Plasterboard Thickness	Maximum Furring Channel Spacing			
	600mm	450mm	400mm	300mm
10mm	0.95	1.30	1.45	1.95
13mm	1.10	1.45	1.65	2.20
16mm	1.10	1.45	1.65	2.20

1. Calculations do not include the framing which must be independently designed to suit the desired loads.
2. If higher internal wind pressures are expected, please contact Siniat for specific design.

FIGURE 3 Non-Fire Rated 1 Layer - Horizontal
Laminating Screw Method to Autoclaved Aerated Concrete (AAC)

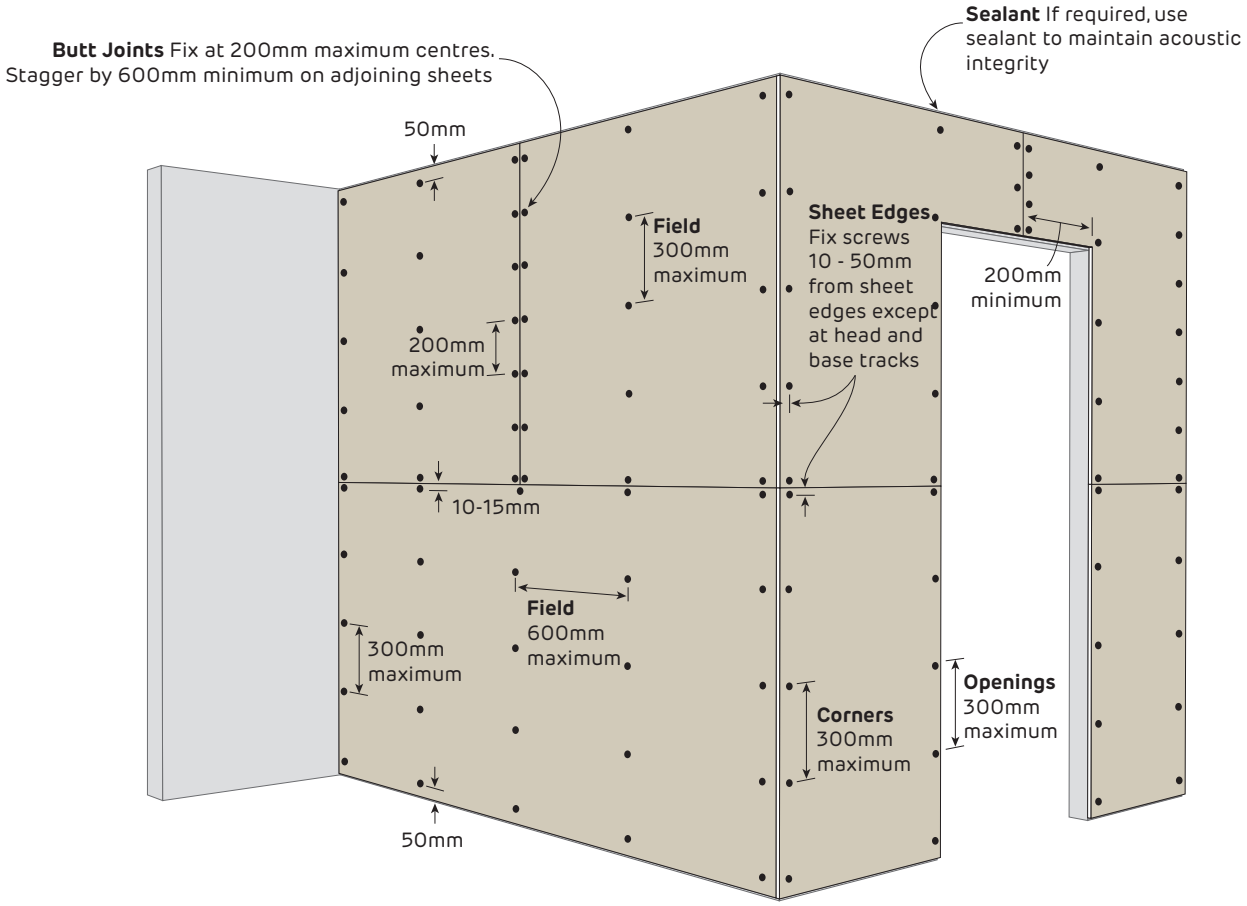

Fixing Pattern Table

Sheet Width	Fixing Pattern
600mm	S S S (3)
900mm	S S S S (4)
1200mm	S S S S S (5)
1350mm	S S S S S S (6)
1400mm	S S S S S S (6)

S = Screw
A = Adhesive daub

Maximum Ultimate Limit State Wind Load Table (kPa)

Plasterboard Thickness	Maximum Screw Column Spacing			
	600mm	450mm	400mm	300mm
10mm	0.75	1.05	1.15	1.55
13mm	0.85	1.15	1.30	1.75
16mm	0.85	1.15	1.30	1.75

1. Calculations do not include the substrate which must be independently designed to suit the desired loads.
2. If higher internal wind pressures are expected, please contact Siniat for specific design.

FIGURE 4 Non-Fire Rated 1 Layer - Horizontal
Screw and Adhesive Method to concrete filled Dincel PVC Permanent Formwork

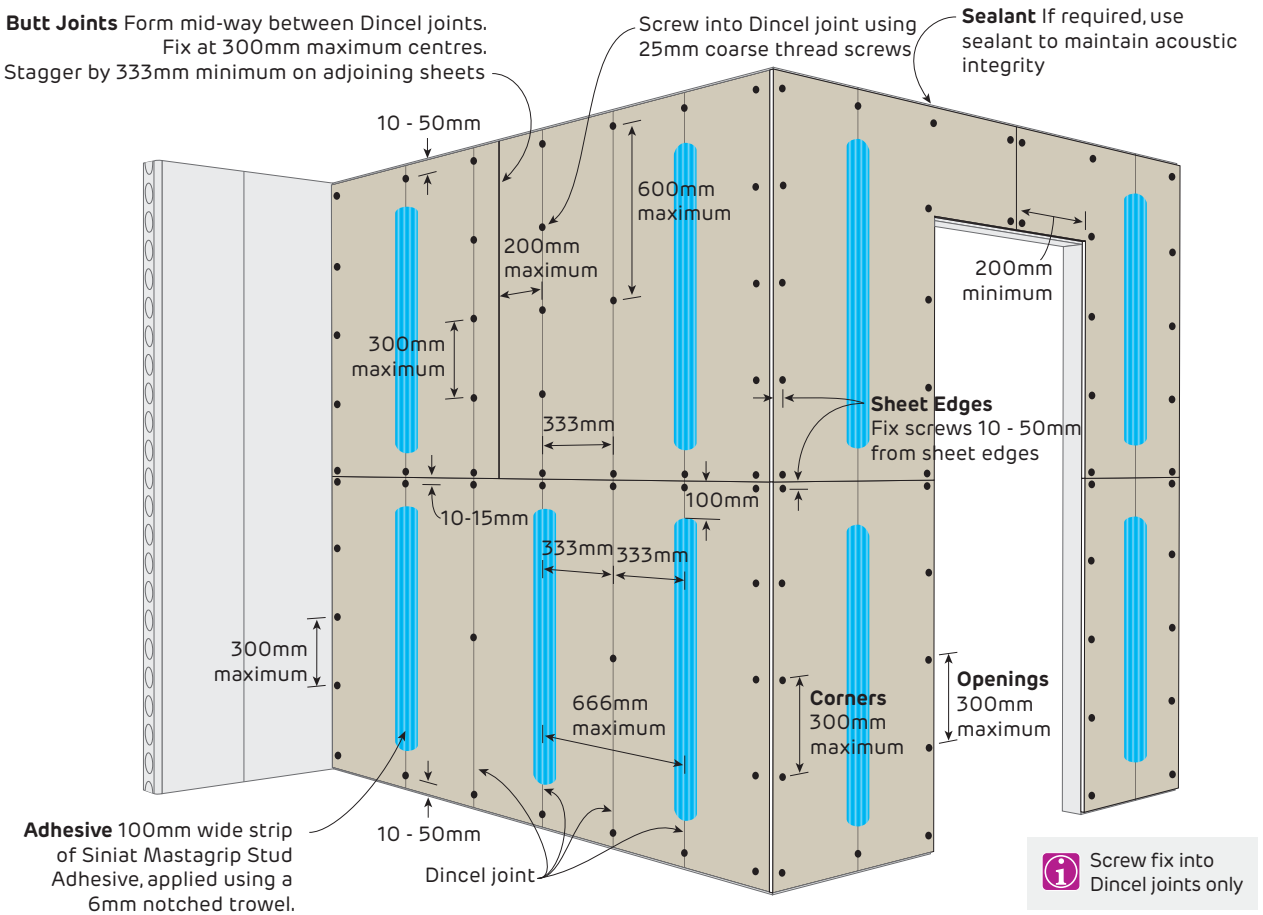

Maximum Ultimate Limit State Wind Load Table (kPa)

Plasterboard Thickness	Fixing Column Spacing
	333mm
13mm	0.75
16mm	0.75

1. Calculations do not include the substrate which must be independently designed to suit the desired loads.
2. If higher internal wind pressures are expected, please contact Siniat for specific design.

FIGURE 5 Fire Rated - 1 Layer Horizontal
Screw Method over vertical furring channels

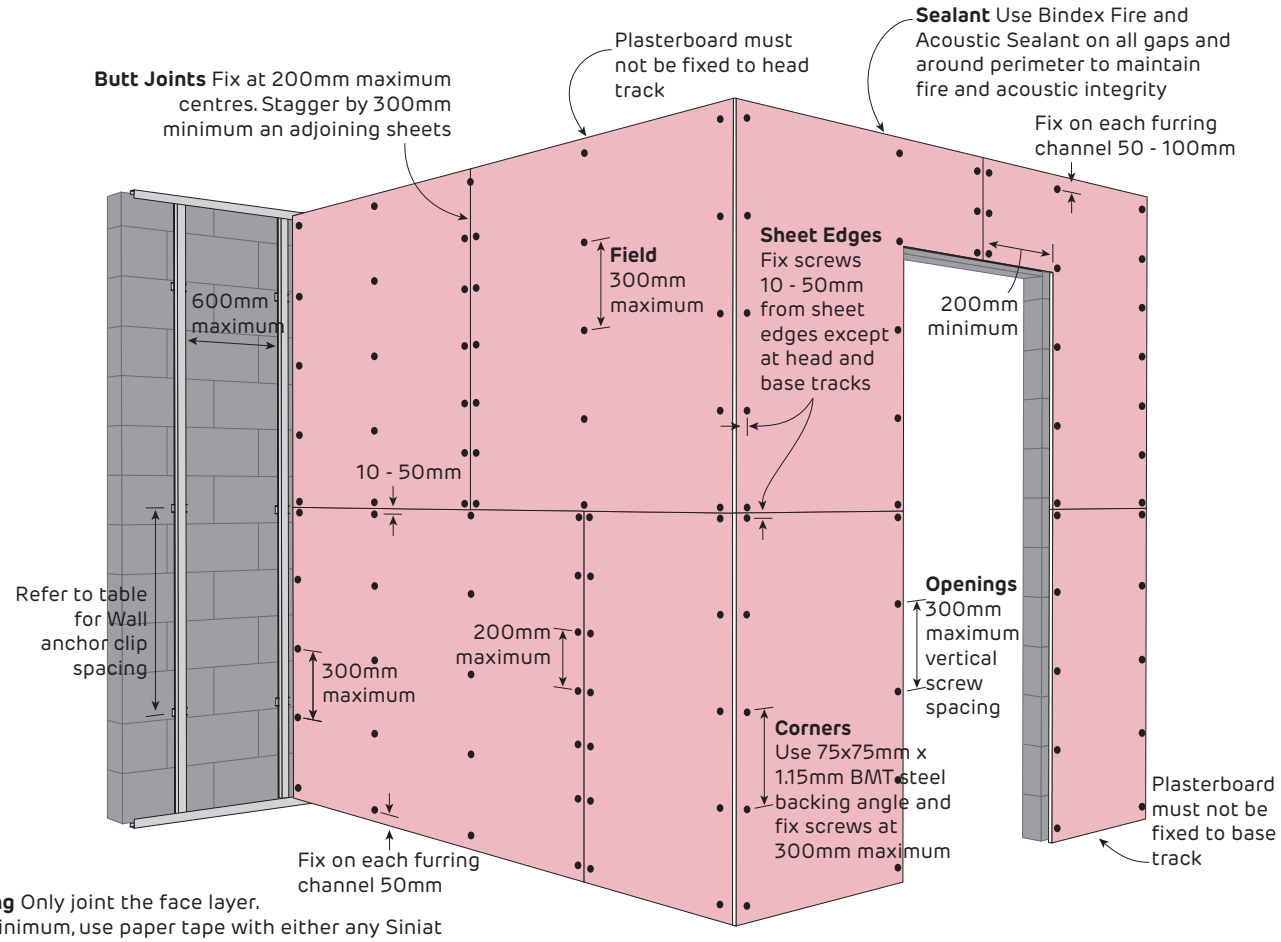

Jointing Only joint the face layer.
As a minimum, use paper tape with either any Siniat jointing compound applied in one or two coats to the thickness of two coats. Alternatively, for butt joints only, use Bindex Fire and Acoustic Sealant according to the Product Data Sheet.

Fixing Pattern Table

Sheet Width	Fixing Pattern
600mm	S S S (3)
900mm	S S S S (4)
1200mm	S S S S S (5)
1350mm	S S S S S S (6)
1400mm	S S S S S S (6)

S = Screw

Maximum Ultimate Limit State Wind Load Table (kPa)

Plasterboard Thickness	Maximum Furring Channel Spacing			
	600mm	450mm	400mm	300mm
13mm	0.85	1.15	1.30	1.75
16mm	0.85	1.15	1.30	1.75

1. Calculations do not include the framing which must be independently designed to suit the desired loads.
2. If higher internal wind pressures are expected, please contact Siniat for specific design.

FIGURE 6 Fire Rated 2 Layers - Horizontal + Horizontal
Screw Only Method over vertical furring channels

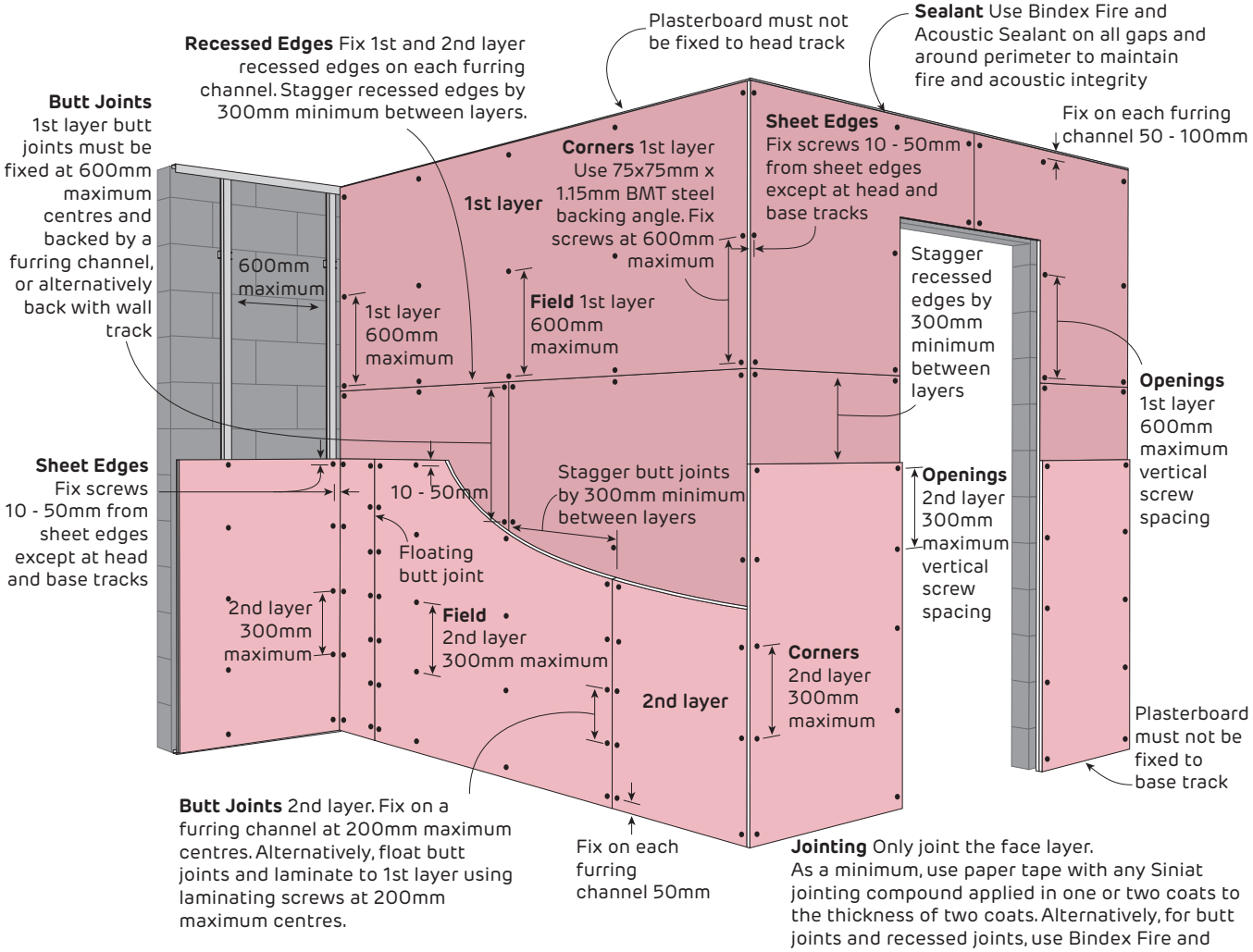

Fixing Pattern Table

Sheet Width	Fixing Pattern
600mm	S S S (3)
900mm	S S S S (4)
1200mm	S S S S S (5)
1350mm	S S S S S S (6)
1400mm	S S S S S S (6)

S = Screw

Maximum Ultimate Limit State Wind Load Table (kPa)

Plasterboard Thickness	Maximum Furring Channel Spacing			
	600mm	450mm	400mm	300mm
13mm	0.85	1.15	1.30	1.75
16mm	0.85	1.15	1.30	1.75

1. Calculations do not include the framing which must be independently designed to suit the desired loads.
2. If higher internal wind pressures are expected, please contact Siniat for specific design.

Fire Rated and Non-Fire Rated
Furring Channel Clips into Masonry

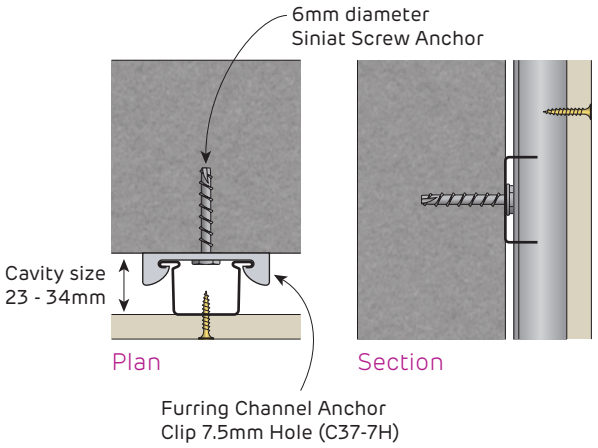

FIGURE 7 Furring Channel Clip
Anchor Clip 7.5mm Hole

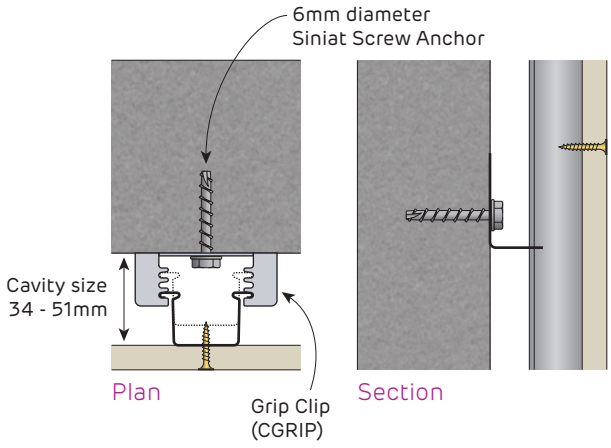

FIGURE 8 Furring Channel Clip
Grip Clip

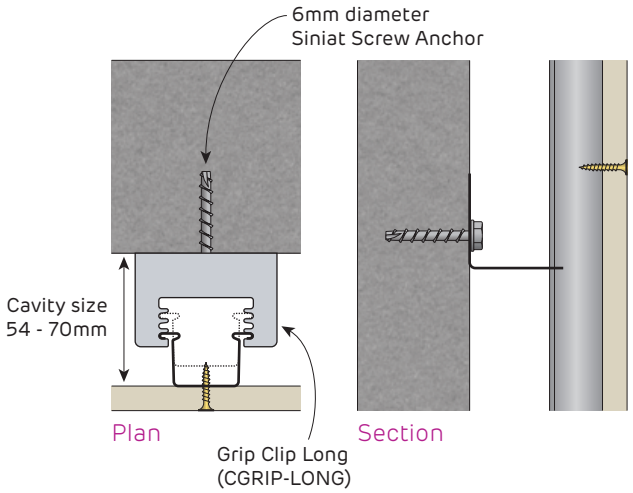

FIGURE 9 Furring Channel Clip
Grip Clip Long

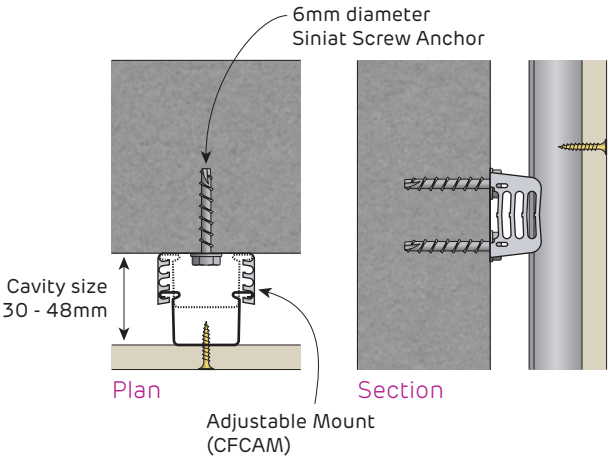

FIGURE 10 Furring Channel Clip
Adjustable Mount

Fire Rated and Non-Fire Rated
Head and Base Details for Plasterboard with Masonry Walls

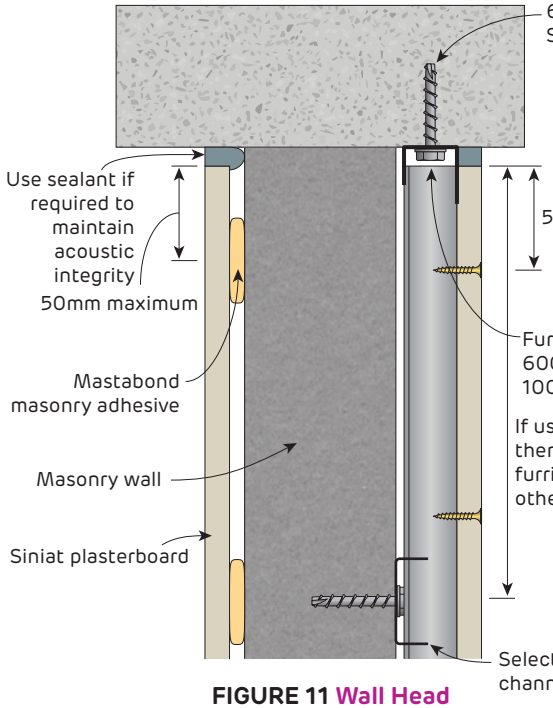

FIGURE 11 Wall Head
Section

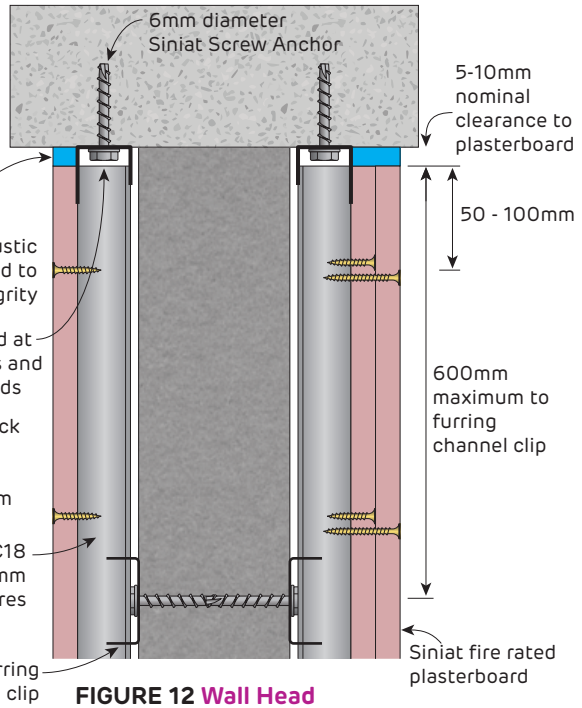

FIGURE 12 Wall Head
Section

Fill any gaps with Bindex Fire and Acoustic Sealant to maintain integrity

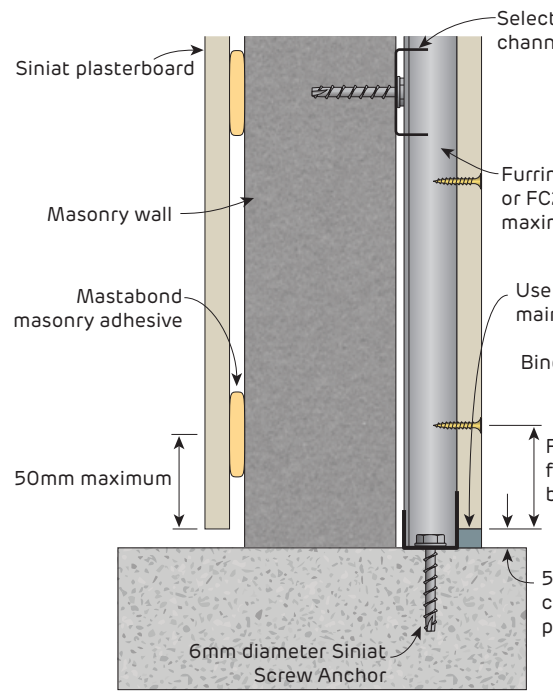

FIGURE 13 Wall Base
Section

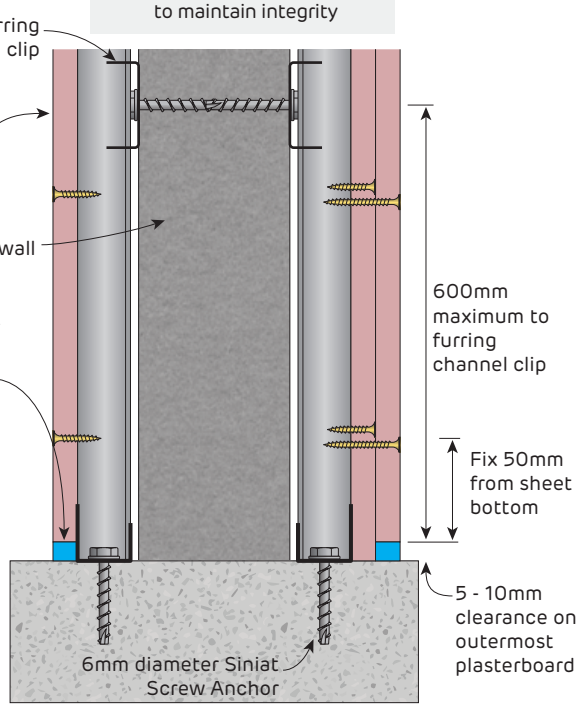

FIGURE 14 Wall Base
Section

Outermost plasterboard sheets with no gap at the base are at risk of moisture wicking

Fire Rated and Non-Fire Rated
Details for Openings in Plasterboard with Masonry Walls

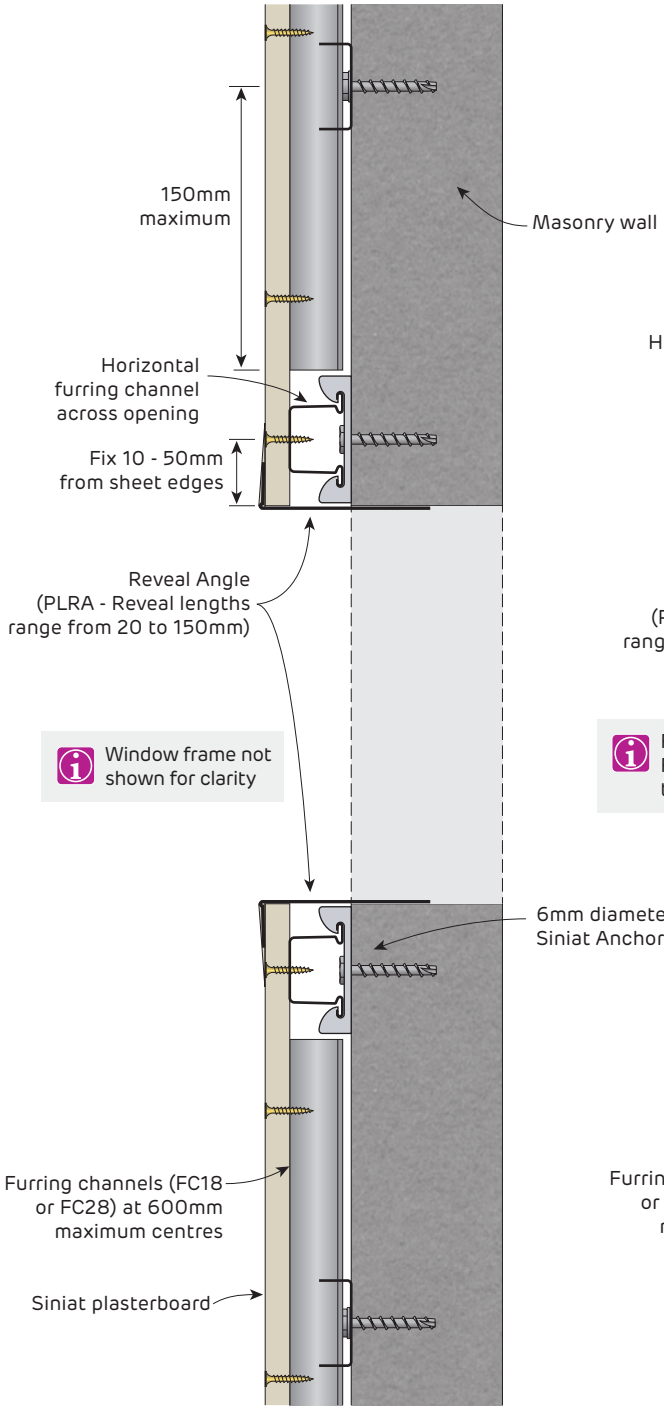

FIGURE 15 Wall Opening
Section

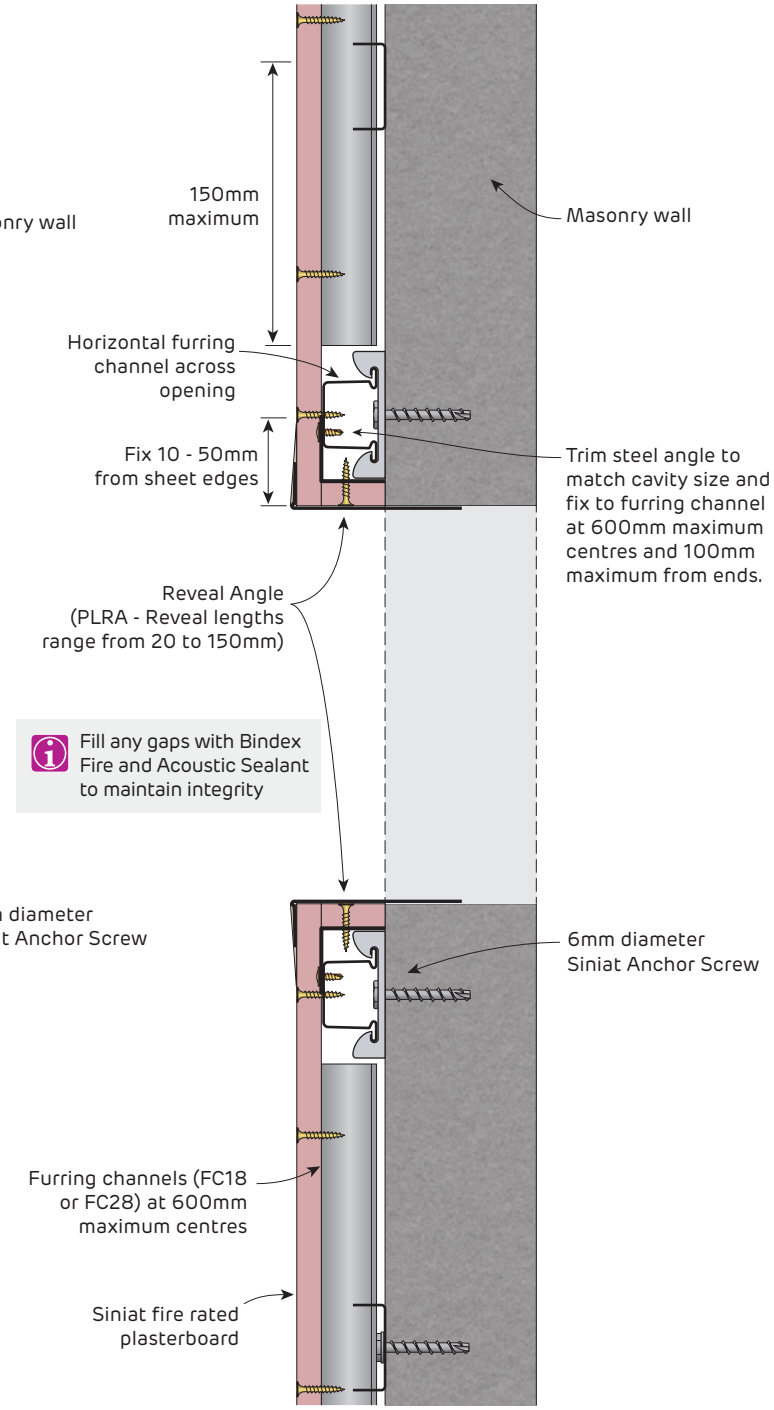

FIGURE 16 Wall Opening
Section

Fire Rated and Non-Fire Rated
Details for Plasterboard with Masonry Walls

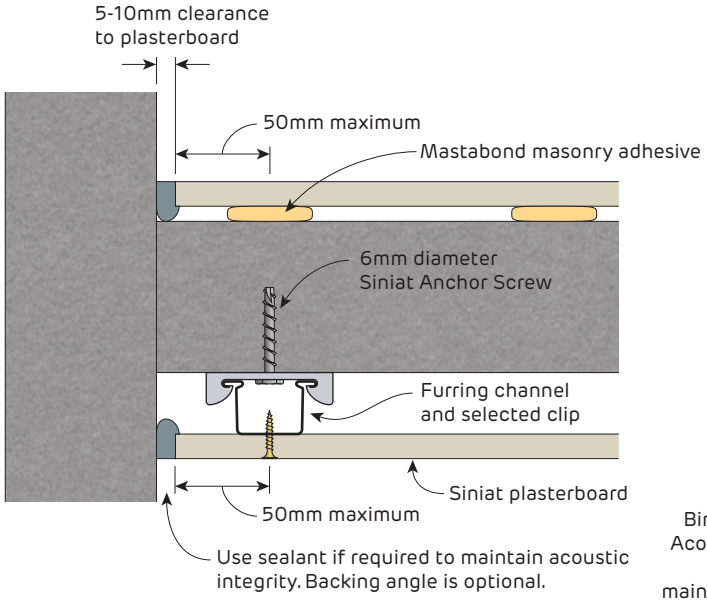

FIGURE 17 Wall End
Plan

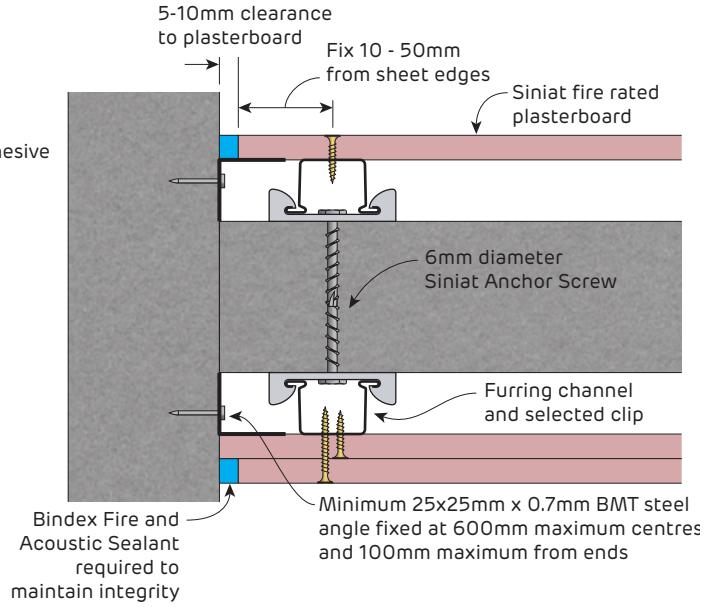

FIGURE 18 Wall End
Plan

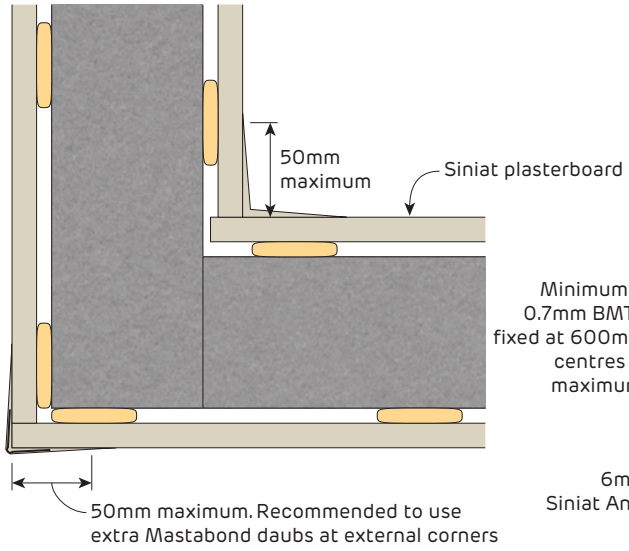

FIGURE 19 Wall Corner
Plan

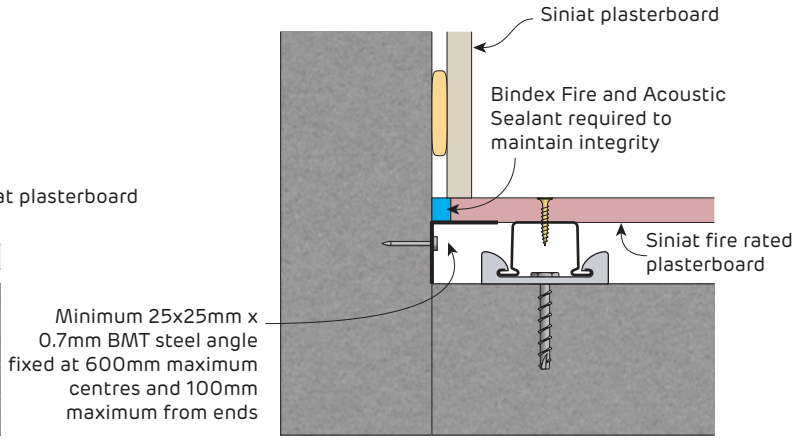

FIGURE 20 Wall Corner
Plan

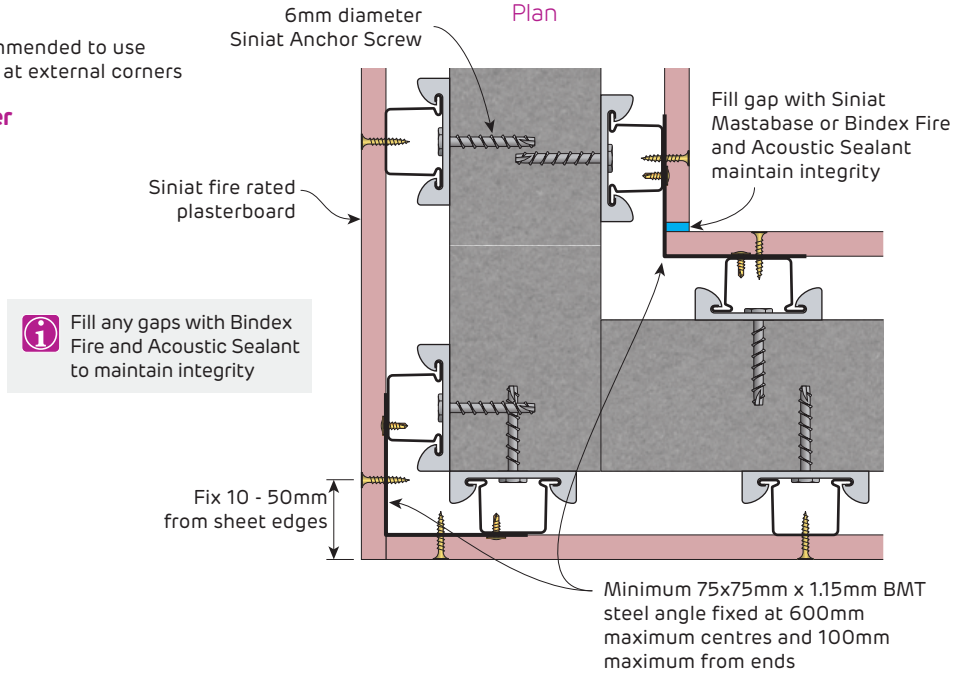

Fill any gaps with Bindex Fire and Acoustic Sealant to maintain integrity

FIGURE 21 Wall Corner
Plan

Fire Rated and Non-Fire Rated
Details for Plasterboard with Masonry Walls

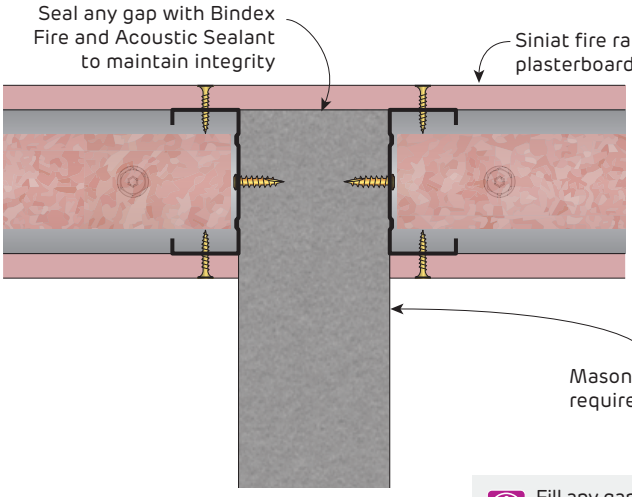

FIGURE 22 Wall Intersection
Plan

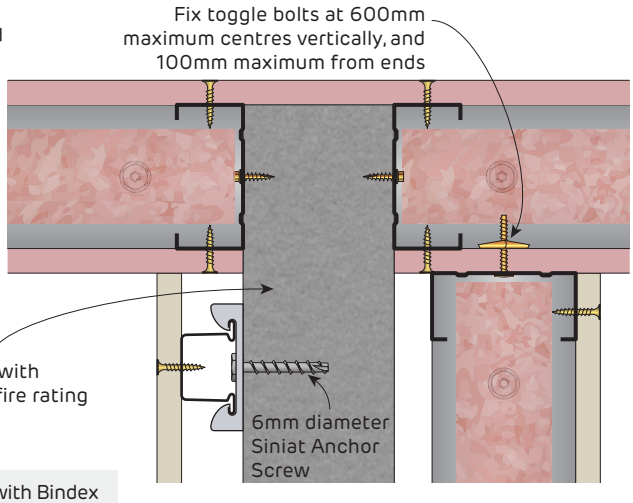

FIGURE 23 Wall Intersection
Plan

Fill any gaps with Bindex Fire and Acoustic Sealant to maintain integrity

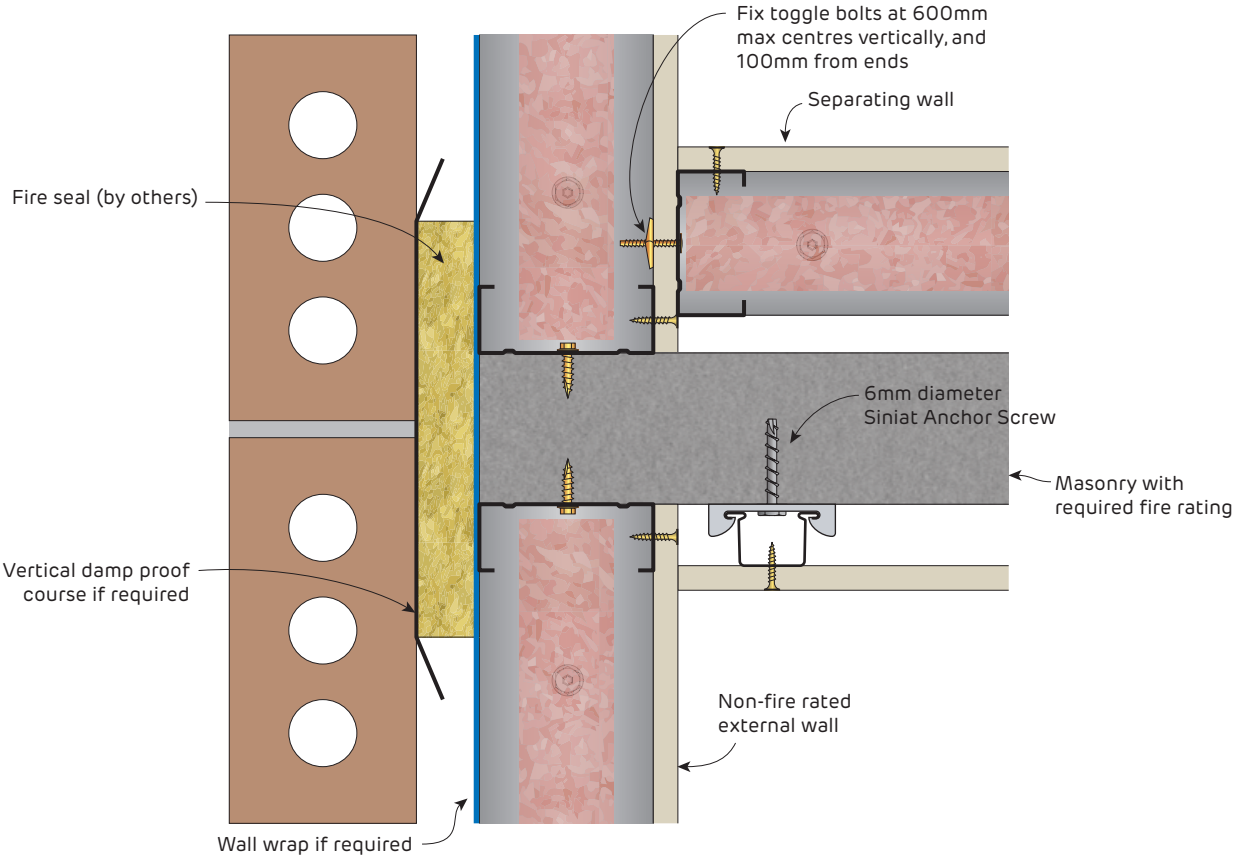

FIGURE 24 Typical Internal Masonry Separating Wall to Brick Veneer
Example Only
Plan

Fire Rated and Non-Fire Rated
Control Joints in Plasterboard with Masonry Walls

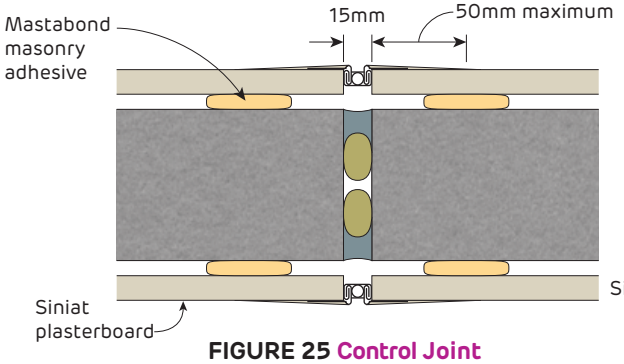

FIGURE 25 Control Joint
Plan

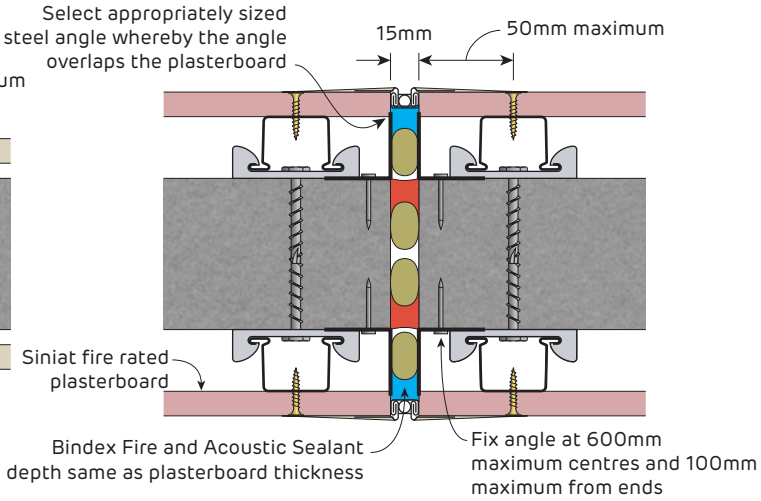

FIGURE 26 Control Joint
Fire rated - 1 layer
Plan

Low acoustic performance

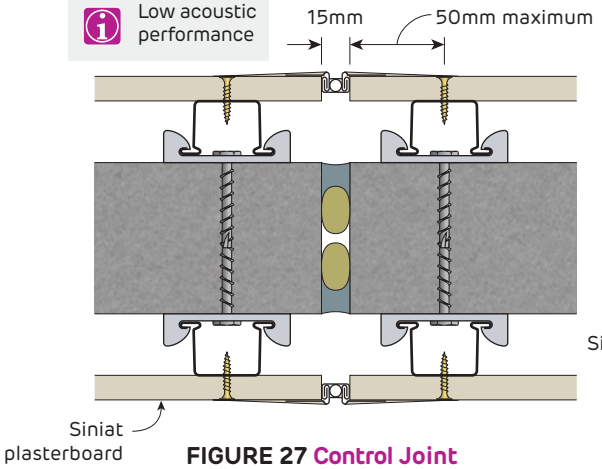

FIGURE 27 Control Joint
Plan

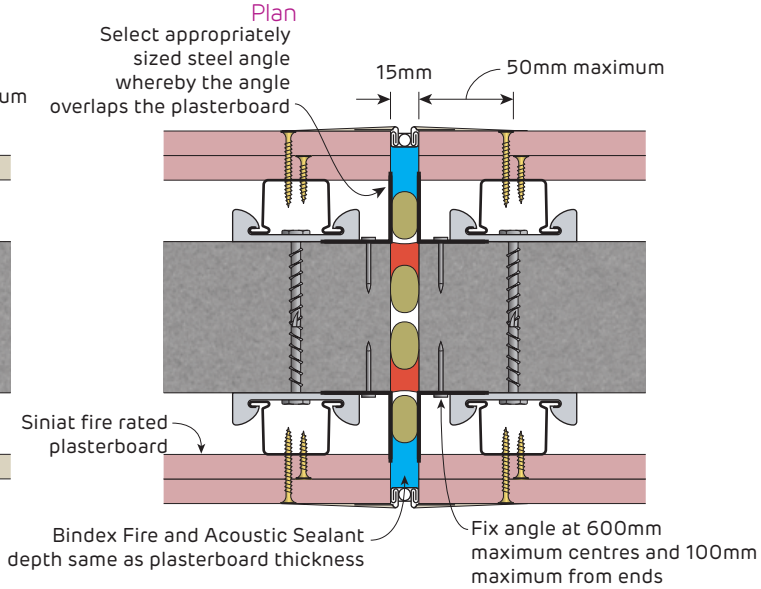

FIGURE 28 Control Joint
Fire rated - 2 layers
Plan

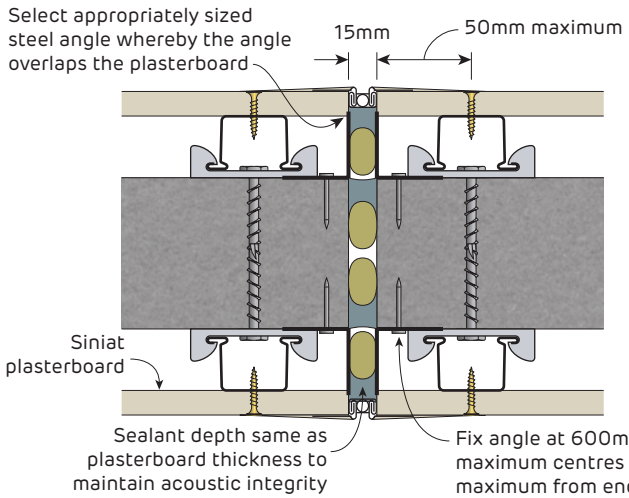

FIGURE 29 Control Joint
Plan

Siniat backing steel angle sizes available:
35x35mm x 0.7mm BMT
50x50mm x 0.7mm BMT
50x50mm x 1.15mm BMT
75x75mm x 1.15mm BMT
100x100mm x 1.15mm BMT



SYSTEMS	**299**
SEPARATING WALL SYSTEMS	299
INSTALLATION	**302**
COMPONENTS	302
GENERAL REQUIREMENTS	303
FIRE RESISTANCE	303
SOUND INSULATION	304
FRAMING	304
PLASTERBOARD FIXING	304
INSTALLATION SEQUENCE	305
CONSTRUCTION DETAILS	**307**
PENETRATIONS	**318**
PATCHING	**319**

3.6 Interhome High-Rise Wall

interhome high-rise systems are designed to meet fire protection and sound insulation requirements for walls separating Sole Occupancy Units (SOU). They are suited to slab-to-slab construction in Class 2 or 3 buildings (apartments, hotels or hostels).

interhome high-rise systems consist of twin steel framed walls with a central fire barrier of 25mm **shaftl**iner encased in steel **inter**home H-studs. 16mm **fire**shield laminated to the central fire barrier is required when the outer wall linings do not extend to the soffit.

The central fire barrier provides the primary fire protection and sound insulation barrier for the system, and thus simplifies installation by allowing non-fire rated installation of internal linings and non-fire rated penetrations of the outer wall linings during construction and also once a SOU is occupied.

Warning: All **inter**home high-rise systems are not suitable for use in timber or steel framed buildings with SOU's separated by timber or steel framed floors that require a Fire Resistance Level (FRL). An example of such a building would be a timber framed multi-residential building which has SOU's above one another.

Separating Wall Systems

IHS115

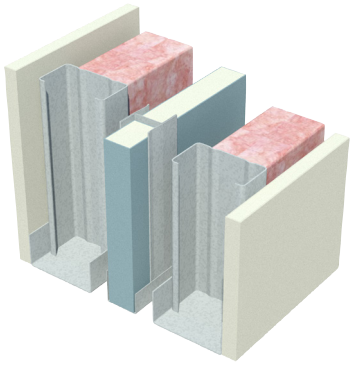

- 1 layer of 13mm **masta**shield
- Steel stud framing
- Minimum 20mm air gap
- 1 layer of 25mm **shaft**liner encased in **inter**home H-studs
- Minimum 20mm air gap
- Steel stud framing
- 1 layer of 13mm **masta**shield

Fire Resistance Level

-/60/60
rated from both sides

Report FAR 4815

Minimum Cavity On Both Sides (mm)	Wall Width (mm)	Sound Insulation Rw (Rw + Ctr)		
Cavity size = stud size + air gap		Pink® Partition 75mm 11 kg/m³ in both cavities	Pink® Partition 90mm 14 kg/m³ in both cavities	[8] Insul Prediction v8 [7] Day Design 5008-29 Note: Impact Sound Resistant - Discontinuous Construction
110 (eg: 64 stud + 46 gap)	271	-	65 (**50**) [8]	
130 (eg: 64 stud + 66 gap)	311	68 (**50**) [7]	-	

IHS125

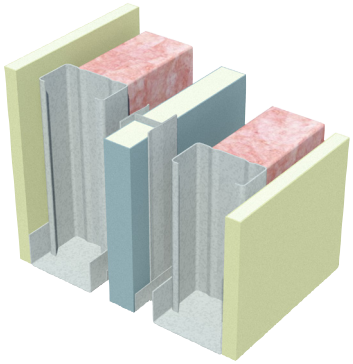

- 1 layer of 13mm **sound**shield or **tru**rock
- Steel stud framing
- Minimum 20mm air gap
- 1 layer of 25mm **shaft**liner encased in **inter**home H-studs
- Minimum 20mm air gap
- Steel stud framing
- 1 layer of 13mm **sound**shield or **tru**rock

Fire Resistance Level

-/60/60
rated from both sides

Report FAR 4815

Minimum Cavity On Both Sides (mm)	Wall Width (mm)	Sound Insulation Rw (Rw + Ctr)	
Cavity size = stud size + air gap		Pink® Partition 75mm 11 kg/m³ R1.8 in both cavities	Day Design 5008-18 [1]CSIRO TL601-01 Note: Impact Sound Resistant - Discontinuous Construction
71 (eg: 51 stud + 20 gap)	193	64 (**51**)	
84 (eg: 64 stud + 20 gap)	219	66 (**53**) [1]	
110	271	67 (**54**)	

IHS145

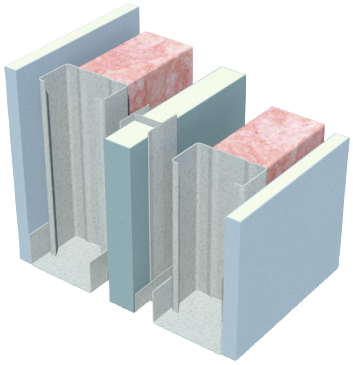

- 1 layer of 13mm **water**shield
- Steel stud framing
- Minimum 20mm air gap
- 1 layer of 25mm **shaft**liner encased in **inter**home H-studs
- Minimum 20mm air gap
- Steel stud framing
- 1 layer of 13mm **water**shield

Fire Resistance Level

-/60/60
rated from both sides

Report FAR 4815

Minimum Cavity On Both Sides (mm)	Wall Width (mm)	Sound Insulation Rw (Rw + Ctr)	
Cavity size = stud size + air gap		Pink® Partition 75mm 11 kg/m³ R1.8 in both cavities	Day Design 5008-18 Note: Impact Sound Resistant - Discontinuous Construction
84 (eg: 64 stud + 20 gap)	219	65 (**50**)	
110 (eg: 64 stud + 46 gap)	271	66 (**51**)	

IHS155

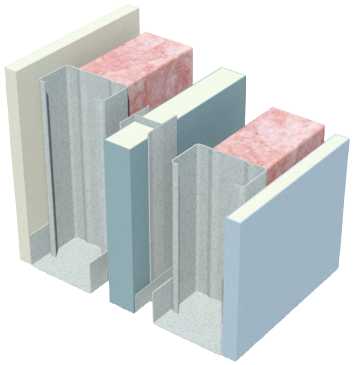

- 1 layer of 13mm **masta**shield
- Steel stud framing
- Minimum 20mm air gap
- 1 layer of 25mm **shaft**liner encased in **inter**home H-studs
- Minimum 20mm air gap
- Steel stud framing
- 1 layer of 13mm **water**shield

Fire Resistance Level

-/60/60
rated from both sides

Report FAR 4815

Minimum Cavity On Both Sides (mm)	Wall Width (mm)	Sound Insulation Rw (Rw + Ctr)		
Cavity size = stud size + air gap		Pink® Partition 75mm 11 kg/m³ in both cavities	Pink® Partition 90mm 14 kg/m³ in both cavities	Insul Prediction v8 Note: Impact Sound Resistant - Discontinuous Construction
110 (eg: 64 stud + 46 gap)	271	-	66 (**52**)	
130 (eg: 64 stud + 66 gap)	311	68 (**50**)	-	

IHS153

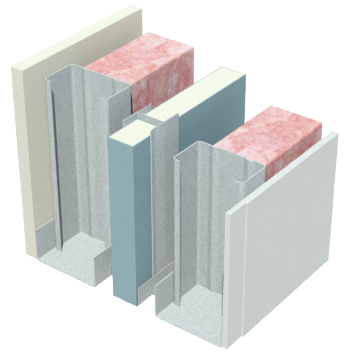

- 1 layer of 13mm **masta**shield
- Steel stud framing
- Minimum 20mm air gap
- 1 layer of 25mm **shaft**liner encased in **inter**home H-studs
- Minimum 20mm air gap
- Steel stud framing
- 1 layer of 6mm Villaboard™

Fire Resistance Level

-/60/60
rated from both sides

Report FAR 4815

Minimum Cavity On Both Sides (mm)	Wall Width (mm)	Sound Insulation Rw (Rw + Ctr)	
Cavity size = stud size + air-gap		Pink® Partition 90mm 14 kg/m³ R2.2 in both cavities	Insul Prediction v8
110 (eg: 64 stud + 46 gap)	264	65 (**51**)	Note: Impact Sound Resistant - Discontinuous Construction

IHS150

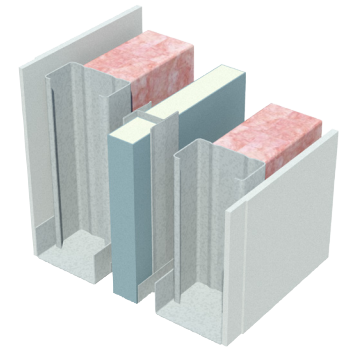

- 1 layer of 6mm Villaboard™
- Steel stud framing
- Minimum 20mm air gap
- 1 layer of 25mm **shaft**liner encased in **inter**home H-studs
- Minimum 20mm air gap
- Steel stud framing
- 1 layer of 6mm Villaboard™

Fire Resistance Level

-/60/60
rated from both sides

Report FAR 4815

Minimum Cavity On Both Sides (mm)	Wall Width (mm)	Sound Insulation Rw (Rw + Ctr)	
Cavity size = stud size + air-gap		Pink® Partition 90mm 14 kg/m³ R2.2 in both cavities	Insul Prediction v8
110 (eg: 64 stud + 46 gap)	257	65 (**51**)	Note: Impact Sound Resistant - Discontinuous Construction

IHS156

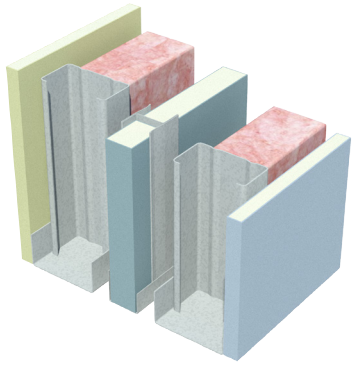

- 1 layer of 13mm **sound**shield
- Steel stud framing
- Minimum 20mm air gap
- 1 layer of 25mm **shaft**liner encased in **inter**home H-studs
- Minimum 20mm air gap
- Steel stud framing
- 1 layer of 13mm **water**shield

Fire Resistance Level

-/60/60
rated from both sides

Report FAR 4815

Minimum Cavity On Both Sides (mm)	Wall Width (mm)	Sound Insulation Rw (Rw + Ctr)	
Cavity size = stud size + air gap		Pink® Partition 75mm 11 kg/m³ R1.8 in both cavities	Day Design 5008-48
84 (eg: 64 stud + 20 gap)	219	66 (**52**)	Note: Impact Sound Resistant - Discontinuous Construction
96 (eg: 76 stud + 20 gap)	243	66 (**52**)	
110	271	67 (**53**)	

IHS154

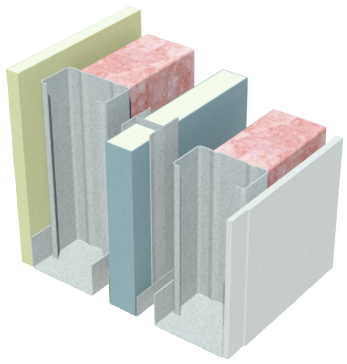

- 1 layer of 13mm **sound**shield
- Steel stud framing
- Minimum 20mm air gap
- 1 layer of 25mm **shaft**liner encased in **inter**home H-studs
- Minimum 20mm air gap
- Steel stud framing
- 1 layer of 6mm Villaboard™

Fire Resistance Level

-/60/60
rated from both sides

Report FAR 4815

Minimum Cavity On Both Sides (mm)	Wall Width (mm)	Sound Insulation Rw (Rw + Ctr)	
Cavity size = stud size + air gap		Pink® Partition 75mm 11 kg/m³ R1.8 in both cavities	Day Design 5008-48
84 (eg: 64 stud + 20 gap)	212	66 (**52**)	Note: Impact Sound Resistant - Discontinuous Construction
96 (eg: 76 stud + 20 gap)	236	66 (**52**)	
110	264	67 (**53**)	

IHS130

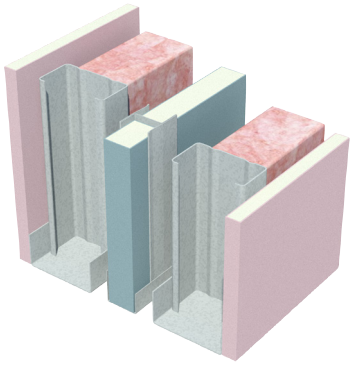

- 1 layer of 13mm **fire**shield or **multi**shield
- Steel stud framing
- Minimum 20mm air gap
- 1 layer of 25mm **shaft**liner encased in **inter**home H-studs
- Minimum 20mm air gap
- Steel stud framing
- 1 layer of 13mm **fire**shield or **multi**shield

Fire Resistance Level

-/60/60
rated from both sides

Report FAR 4815

Minimum Cavity On Both Sides (mm)	Wall Width (mm)	Sound Insulation Rw (Rw + Ctr)
Cavity size = stud size + air gap		Pink® Partition 75mm 11 kg/m³ R1.8 in both cavities
71 (eg: 51 stud + 20 gap)	193	64 (**50**)
84 (eg: 64 stud + 20 gap)	219	66 (**52**) [2]
110 (eg: 64 stud + 46 gap)	271	67 (**53**)

Day Design 5008-18

[2]CSIRO TL601-02

Note: Impact Sound Resistant - Discontinuous Construction

IHS135

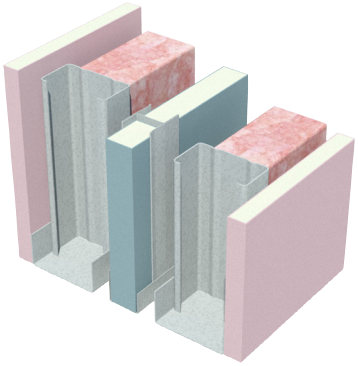

- 1 layer of 16mm **fire**shield or **multi**shield
- Steel stud framing
- Minimum 20mm air gap
- 1 layer of 25mm **shaft**liner encased in **inter**home H-studs
- Minimum 20mm air gap
- Steel stud framing
- 1 layer of 16mm **fire**shield or **multi**shield

Fire Resistance Level

-/60/60
rated from both sides

Report FAR 4815

Minimum Cavity On Both Sides (mm)	Wall Width (mm)	Sound Insulation Rw (Rw + Ctr)
Cavity size = stud size + air gap		Pink® Partition 75mm 11 kg/m³ R1.8 in both cavities
71 (eg: 51 stud + 20 gap)	199	64 (**51**)
84 (eg: 64 stud + 20 gap)	225	66 (**53**)
110 (eg: 64 stud + 46 gap)	277	67 (**54**)

Day Design 5008-18

Note: Impact Sound Resistant - Discontinuous Construction

IHS151

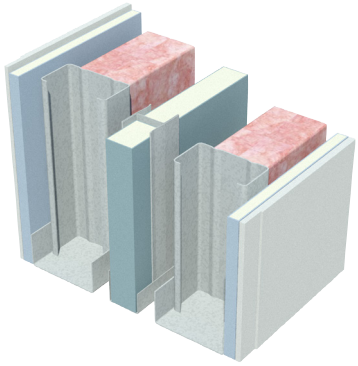

- 1 layer of 10mm **water**shield plus 6mm Villaboard™
- Steel stud framing
- Minimum 20mm air gap
- 1 layer of 25mm **shaft**liner encased in **inter**home H-studs
- Minimum 20mm air gap
- Steel stud framing
- 1 layer of 10mm **water**shield plus 6mm Villaboard™

Fire Resistance Level

-/60/60
rated from both sides

Report FAR 4815

Minimum Cavity On Both Sides (mm)	Wall Width (mm)	Sound Insulation Rw (Rw + Ctr)
Cavity size = stud size + air gap		Pink® Partition 75mm 11 kg/m³ R1.8 in both cavities
71 (eg: 51 stud + 20 gap)	199	65 (**52**)
84 (eg: 64 stud + 20 gap)	225	67 (**54**)
110 (eg: 64 stud + 46 gap)	277	68 (**55**)

Day Design 5008-18

Note: Impact Sound Resistant - Discontinuous Construction

IHS112

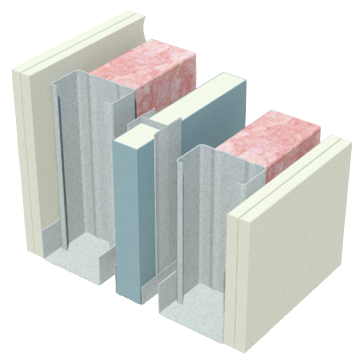

- 2 layers of 10mm **masta**shield or **water**shield
- Steel stud framing
- Minimum 20mm air gap
- 1 layer of 25mm **shaft**liner encased in **inter**home H-studs
- Minimum 20mm air gap
- Steel stud framing
- 2 layers of 10mm **masta**shield or **water**shield

Fire Resistance Level

-/60/60
rated from both sides

Report FAR 4815

Minimum Cavity On Both Sides (mm)	Wall Width (mm)	Sound Insulation Rw (Rw + Ctr)
Cavity size = stud size + air gap		Pink® Partition 75mm 11 kg/m³ R1.8 in both cavities
71 (eg: 51 stud + 20 gap)	207	64 (**51**)
84 (eg: 64 stud + 20 gap)	233	66 (**53**)
110 (eg: 64 stud + 46 gap)	285	67 (**54**)

Day Design 5008-18

Note: Impact Sound Resistant - Discontinuous Construction

Components

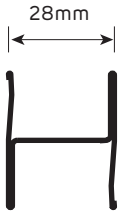

0.55mm BMT
G300
AM125 Zincalume® steel

Use 3m H-stud for 3m Shaftliner. Use 3.6m H-stud for 3.6m Shaftliner.

Product Code	Length (mm)
IHS25-30	3000
IHS25-36	3600

FIGURE 1 interhome H-stud
Profile

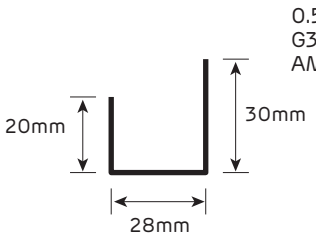

0.5mm BMT
G300
AM125 Zincalume® steel

Product Code	Length (mm)
T28-30	3000

FIGURE 2 J-Track
Profile

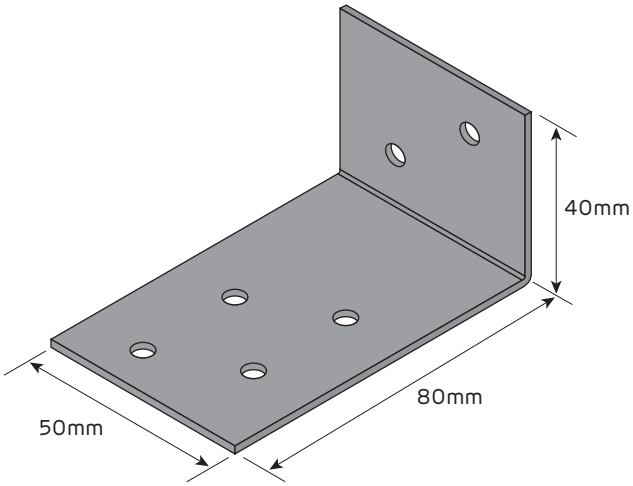

Product Code
CIH-L

FIGURE 3 interhome aluminium clip
Isometric

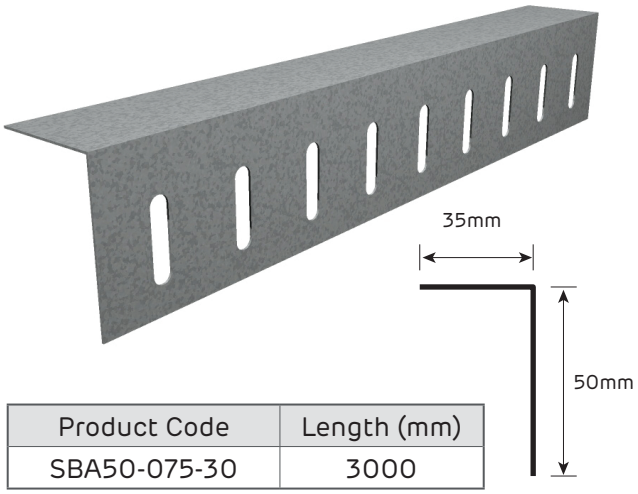

Product Code	Length (mm)
SBA50-075-30	3000

FIGURE 4 Slotted Head Angle
0.75mm BMT
Profile and Perspective

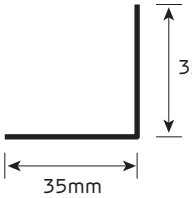

0.7mm BMT
G300
AM125 Zincalume® steel

Product Code	Length (mm)
BA35-070-30	3000
BA35-070-36	3600

FIGURE 5 35x35mm Steel Backing Angle
0.7mm BMT
Profile

Plasterboard

Central Fire Barrier

- Siniat 25mm **shaft**liner
- Siniat 25mm **inter**shield

Wall Linings

- Siniat **masta**shield
- Siniat **sound**shield
- Siniat **water**shield
- Siniat **fire**shield
- Siniat **multi**shield
- Siniat **tru**rock
- James Hardie Villaboard™

General Requirements

Use either **shaft**liner, or for added mould protection **inter**shield in the central fire barrier
Apply **bindex** fire and acoustic sealant to all gaps in the central fire barrier to maintain fire and acoustic integrity. If sheets or tracks are touch fitting and no gap exists, fire sealant is not required.
If **inter**home aluminium clips (CIH-L) are required, they are to connect **inter**home H-studs to the stud frames on either side. Aluminium will melt in a fire so the frame of the SOU on the fire side can detach from the central fire barrier.
Leave a gap of at least 20mm between the central fire barrier and the studs of both frames. A gap of at least 25mm is recommended on the side that has the **fire**shield laminated to the **shaft**liner.
Control joints are not required in the central fire barrier.
Refer to Section 3.1 for steel stud framing and internal lining requirements.

- Refer to the **inter**home high-rise 90 Minute Supplement for non-load bearing FRL -/90/90 walls.
- Refer to the **inter**home Class 1 Systems and Installation Guide for load bearing walls with an FRL of 60/60/60 for separating Class 1 buildings from ground to roof.
- Refer to the **inter**home Class 2 Systems and Installation Guide for load bearing walls with an FRL of 90/90/90 for Class 2 Type A buildings where the wall starts at a slab or other fire rated support and finishes under a roof.

Fire Resistance

All systems in this section are displayed with an FRL of -/60/60 to indicate that they are not usually used to support other building elements. However, these systems do have an FRL of 60/60/60 for the frame on the opposite side to fire attack. In a fire event, the framing on the fire side of the central fire barrier is considered to collapse before 60 minutes.
Where the outer wall linings do not extend full height to the soffit, 16mm **fire**shield is laminated to the 25mm **shaft**liner which also provides an FRL of -/60/60. The 16mm **fire**shield must overlap a minimum of 150mm below the ceiling [refer to construction details].
The outer wall lining and cavity insulation of any **inter**home high-rise system can be used on one side of a different system without reducing its FRL. The linings may also transition along a wall from one Interhome High-Rise system to another.

Sound Insulation

Services installed in one cavity have an acoustic rating to the other side of the **inter**home high-rise wall of at least Rw + Ctr 40 which meets the requirements of the NCC for walls separating soil, waste or water supply pipes from a habitable room.
When the internal lining and cavity insulation of one **inter**home high-rise system is used on one side of a different **inter**home high-rise system, the acoustic rating is the lower of the two provided that the central fire barrier and stud cavity sizes are the same.

Framing

Use 3m **inter**home H-studs with 3m **shaft**liner panels and 3.6m **inter**home H-studs with 3.6m **shaft**liner panels. Use **inter**home aluminium clips as shown in Figure 16 for walls higher than the H-stud length and 7.2m.

Siniat Internal Wind Load Calculator

Refer to Section 2.3 for assistance determining the relevant internal wind pressures for a specific project. Or use the Siniat Internal Wind Load Calculator by clicking on the link or by using your phone's camera on the QR code.

Table 1 Screw Type and Minimum Size for Steel Framing

Fixing Aluminium Clips	Fastener
interhome aluminium clips to steel **inter**home H-studs	8g x 16mm fine thread screw
interhome aluminium clips to steel **inter**home H-studs through 16mm **fire**shield	8g x 30mm fine thread screw
General Steel Framing	**Fastener**
0.5 - 0.75mm steel framing	8g x 16mm fine thread screw
1.15mm steel framing	10g x 16mm fine thread screw

Refer to 'Fasteners and Anchors' in Section 2 for typical fasteners and anchors available.

Plasterboard Fixing

shaftliner or **inter**shield are friction fitted into the **inter**home H-studs and J-tracks
Install the outer (internal) wall linings with the 'Screw and Adhesive Method' or the 'Screw Only Method'. Both methods can be used to achieve the fire rating.

Table 2 Screw Type and Minimum Size for the Installation of Plasterboard to Steel

Plasterboard Thickness	1st Layer
10mm	6g x 25mm screw
13mm	6g x 25mm screw
16mm	6g x 32mm screw

1. For steel ≤ 0.75mm BMT, use fine thread needle point screws.
2. For steel ≥ 0.75mm BMT, use fine thread drill point screws.
3. 10g x 38mm Laminating screws may be used as detailed in installation diagrams.

Installation Sequence

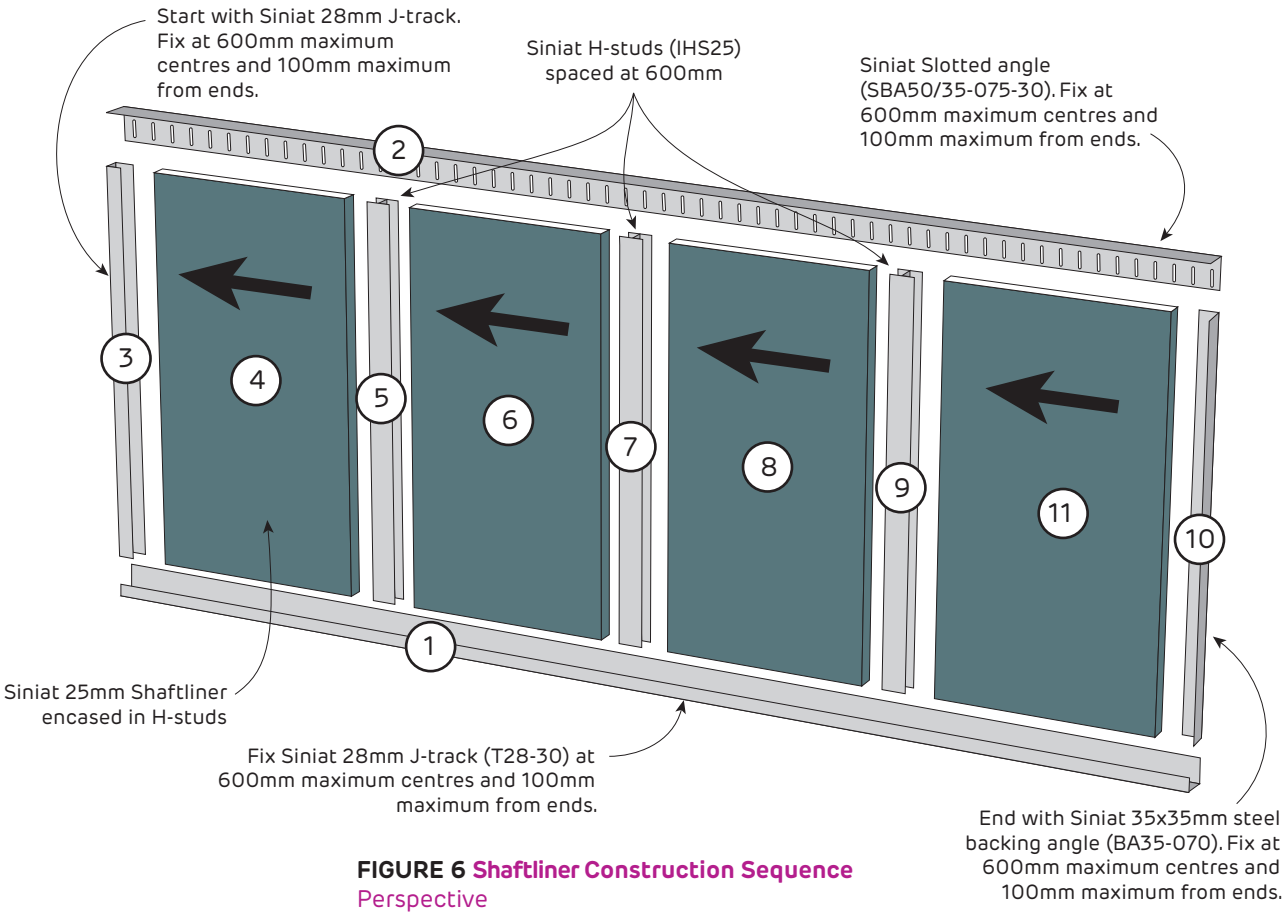

FIGURE 6 Shaftliner Construction Sequence
Perspective

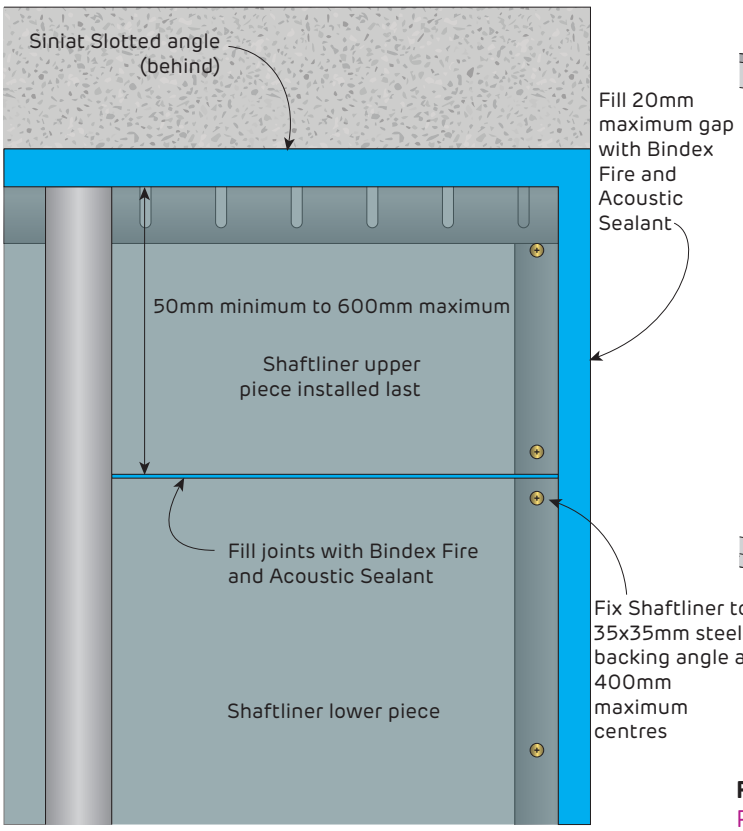

FIGURE 7 Alternative Shaftliner End Construction
Elevation

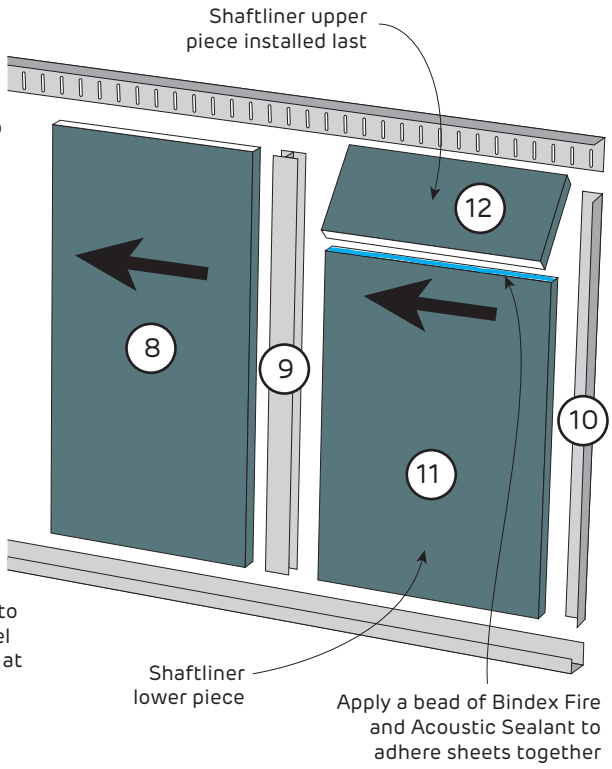

FIGURE 8 Alternative Shaftliner End Construction
Perspective

Fire Rated

InterHome High-Rise Central Fire Barrier Installation

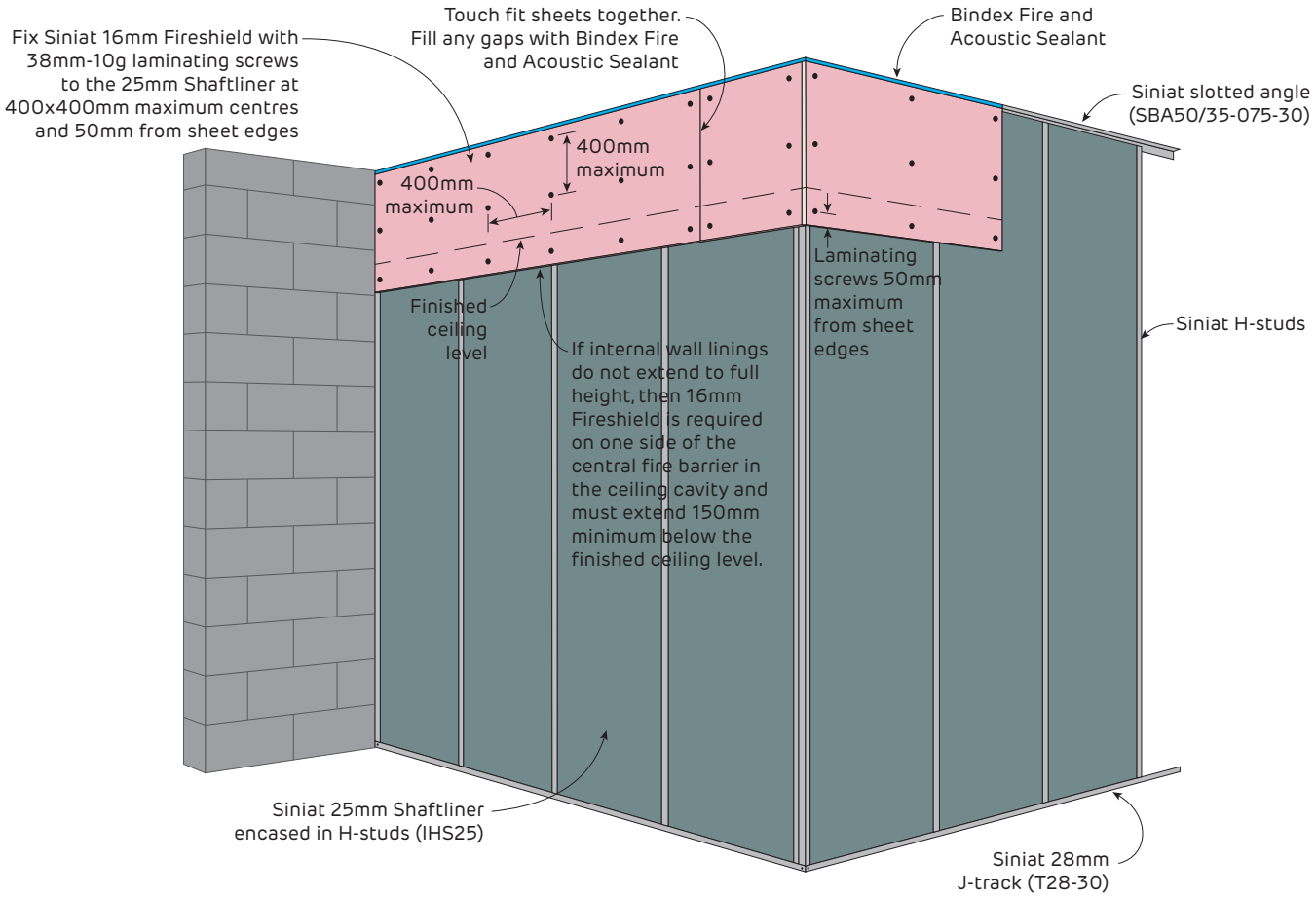

FIGURE 9 Central Fire Barrier for FRL -/60/60 Systems
Perspective

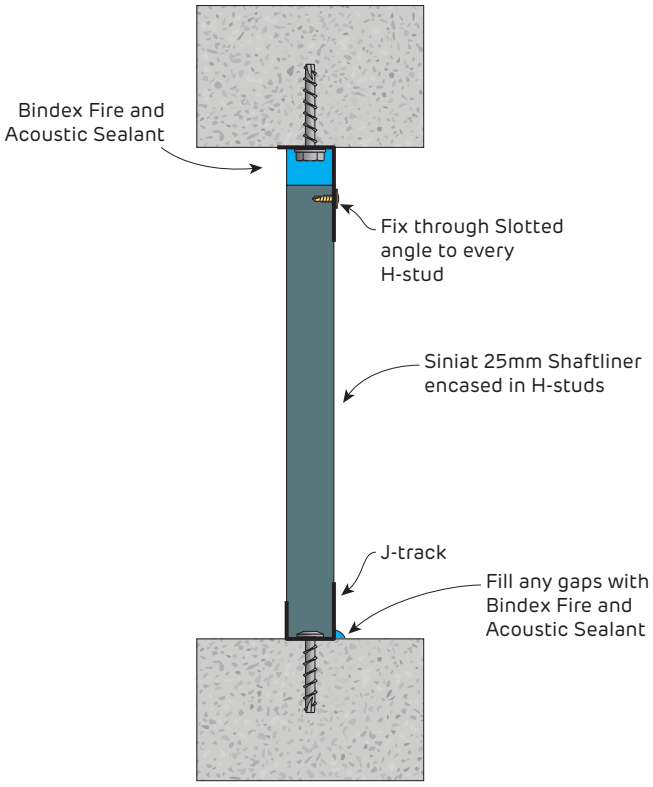

FIGURE 10 Central Fire Barrier
For FRL -/60/60 Systems
Section

Fire Rated

InterHome High-Rise Head and Base Detail - FRL -/60/60 - Wall Height ≤ 3.6m

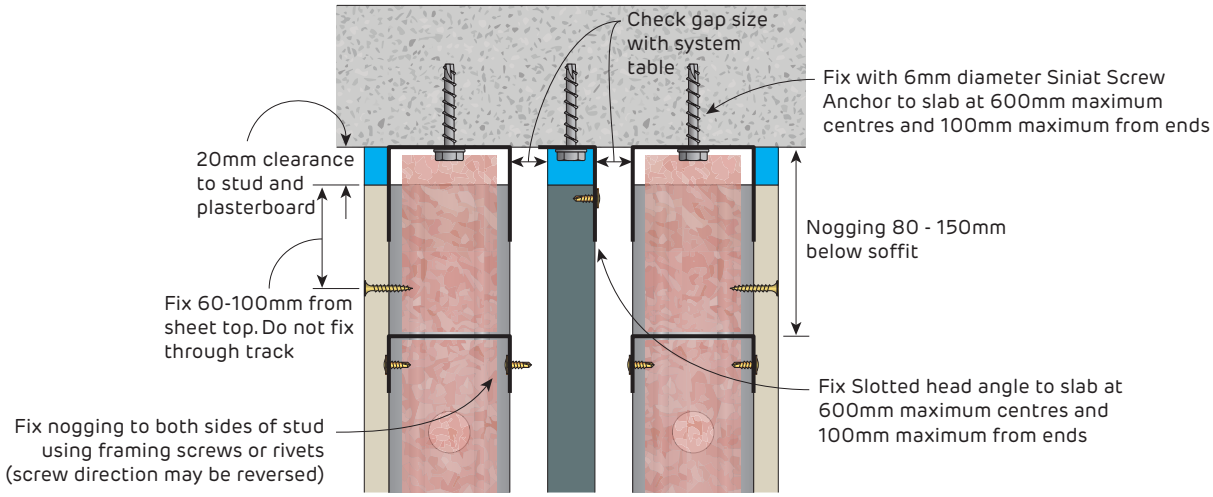

FIGURE 11 Wall Head
Slotted Steel Angle above Shaftliner Section

Do not rigidly fix cornice to non-load bearing wall head and soffit, as slab deflection is expected.

Fill any gaps with Bindex Fire and Acoustic Sealant to maintain integrity

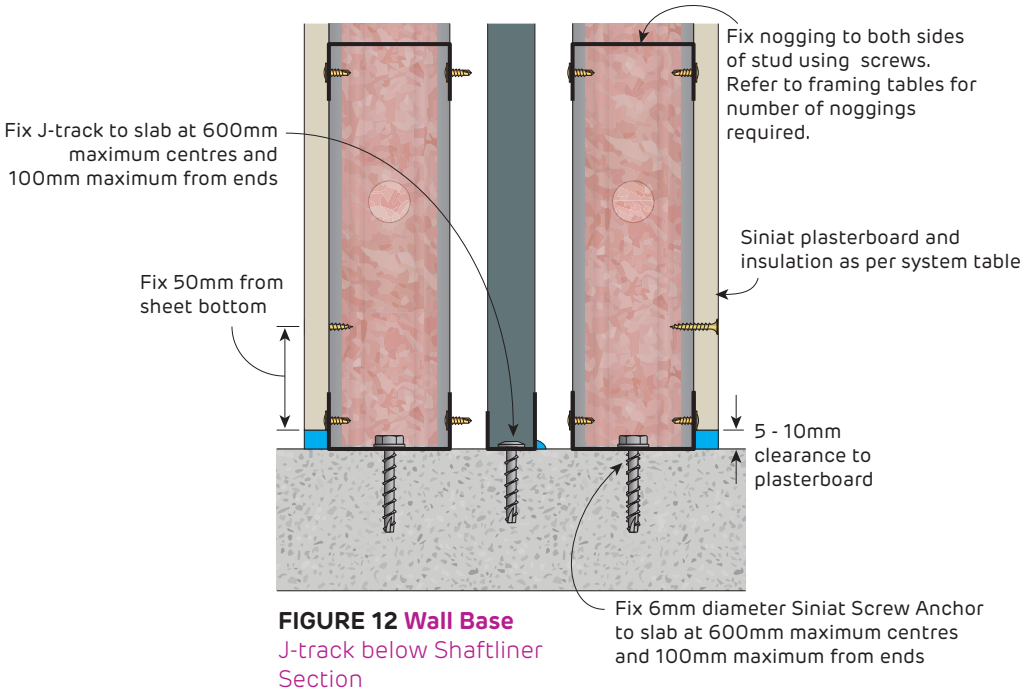

FIGURE 12 Wall Base
J-track below Shaftliner Section

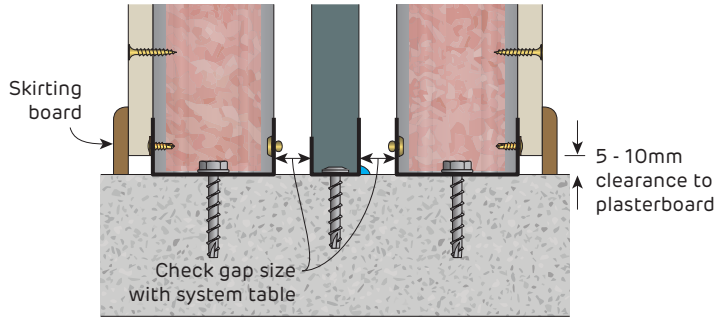

FIGURE 13 Alternative Wall Base
J-track below Shaftliner Section

Fire Rated

InterHome High-Rise Head Details with CAC Ceiling - FRL -/60/60 - Wall Height ≤ 3.6m

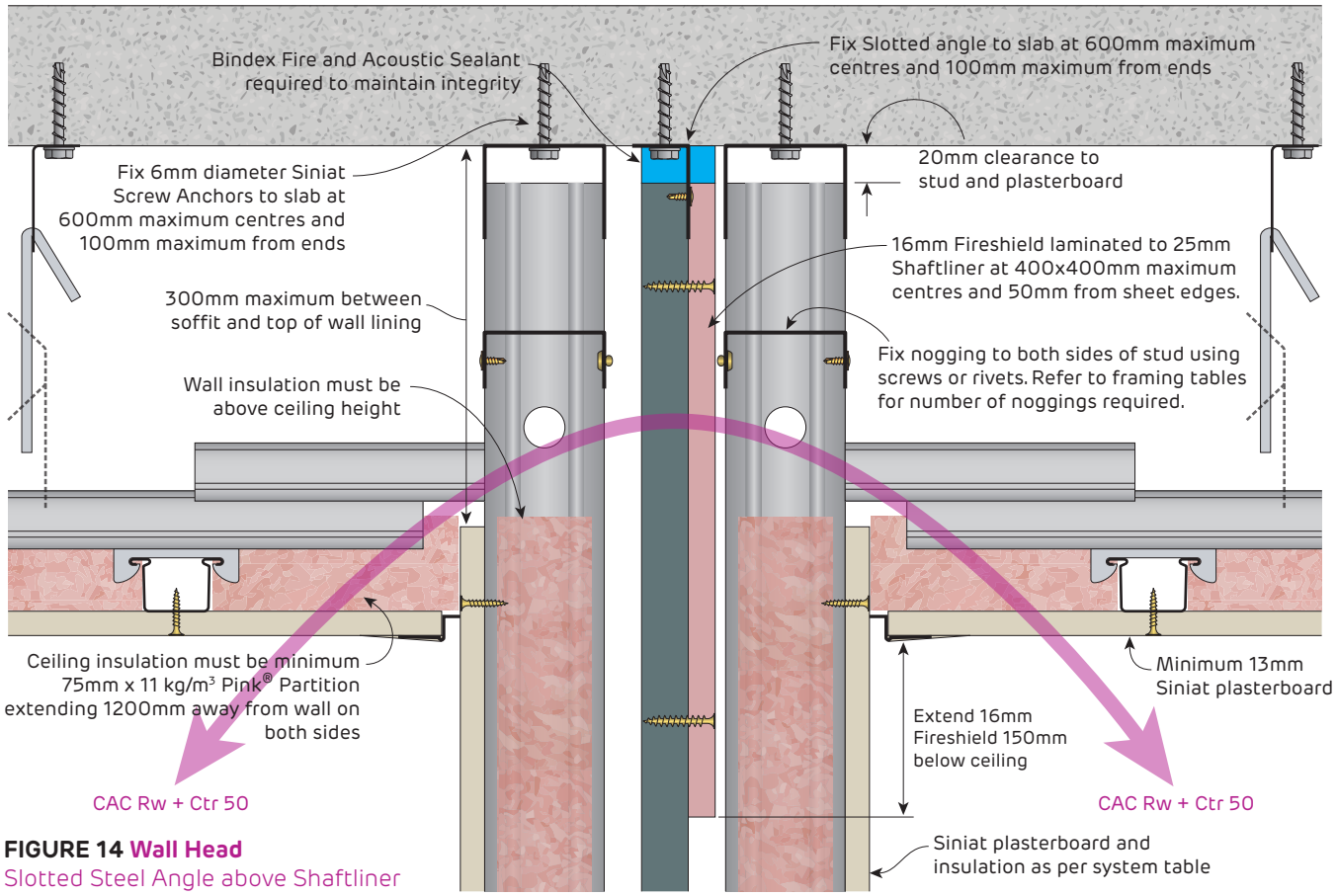

FIGURE 14 Wall Head
Slotted Steel Angle above Shaftliner Section

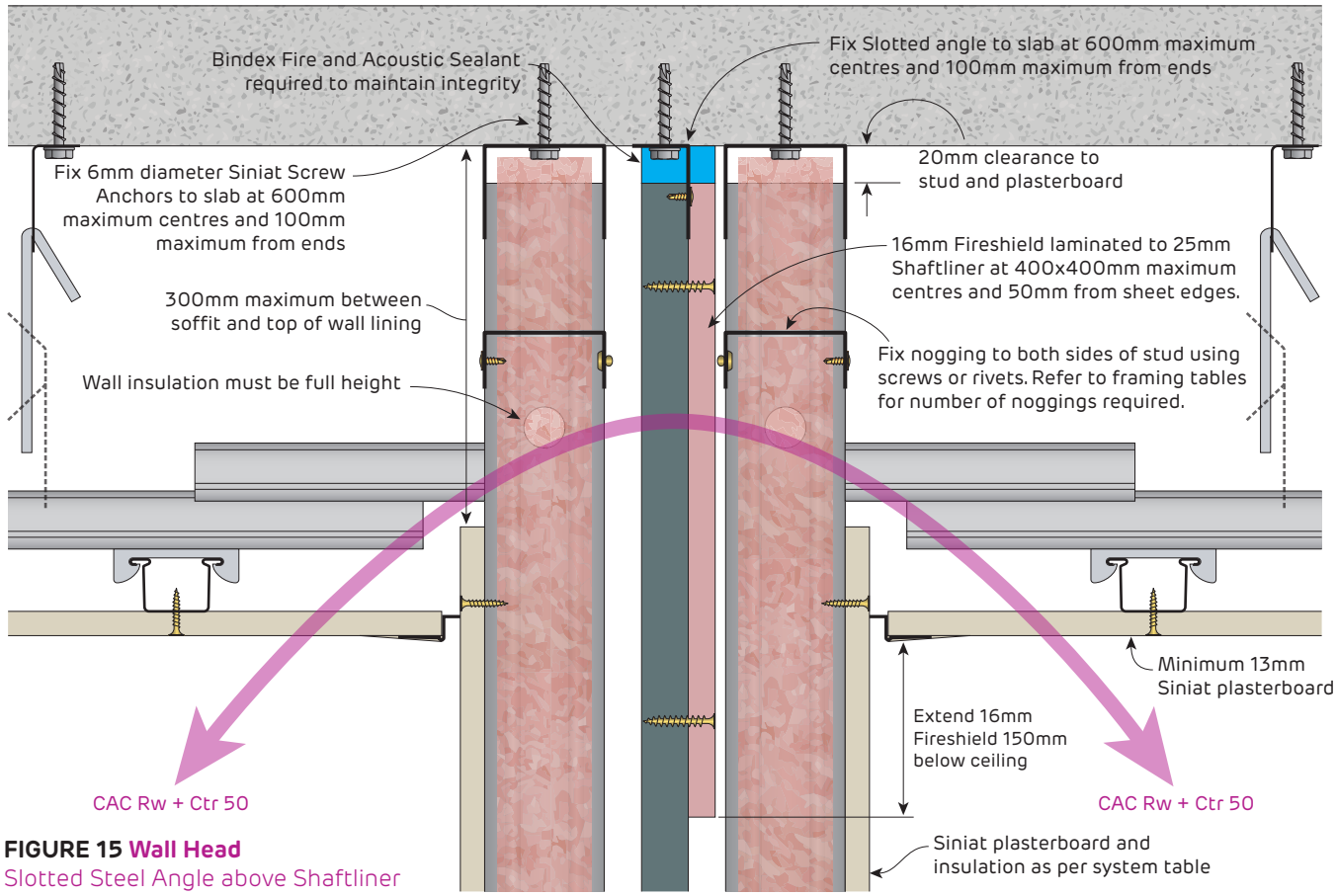

FIGURE 15 Wall Head
Slotted Steel Angle above Shaftliner Section

Fire Rated

InterHome High-Rise Head Details with CAC Ceiling - FRL -/60/60 - Wall Height 3.6m to 7.2m

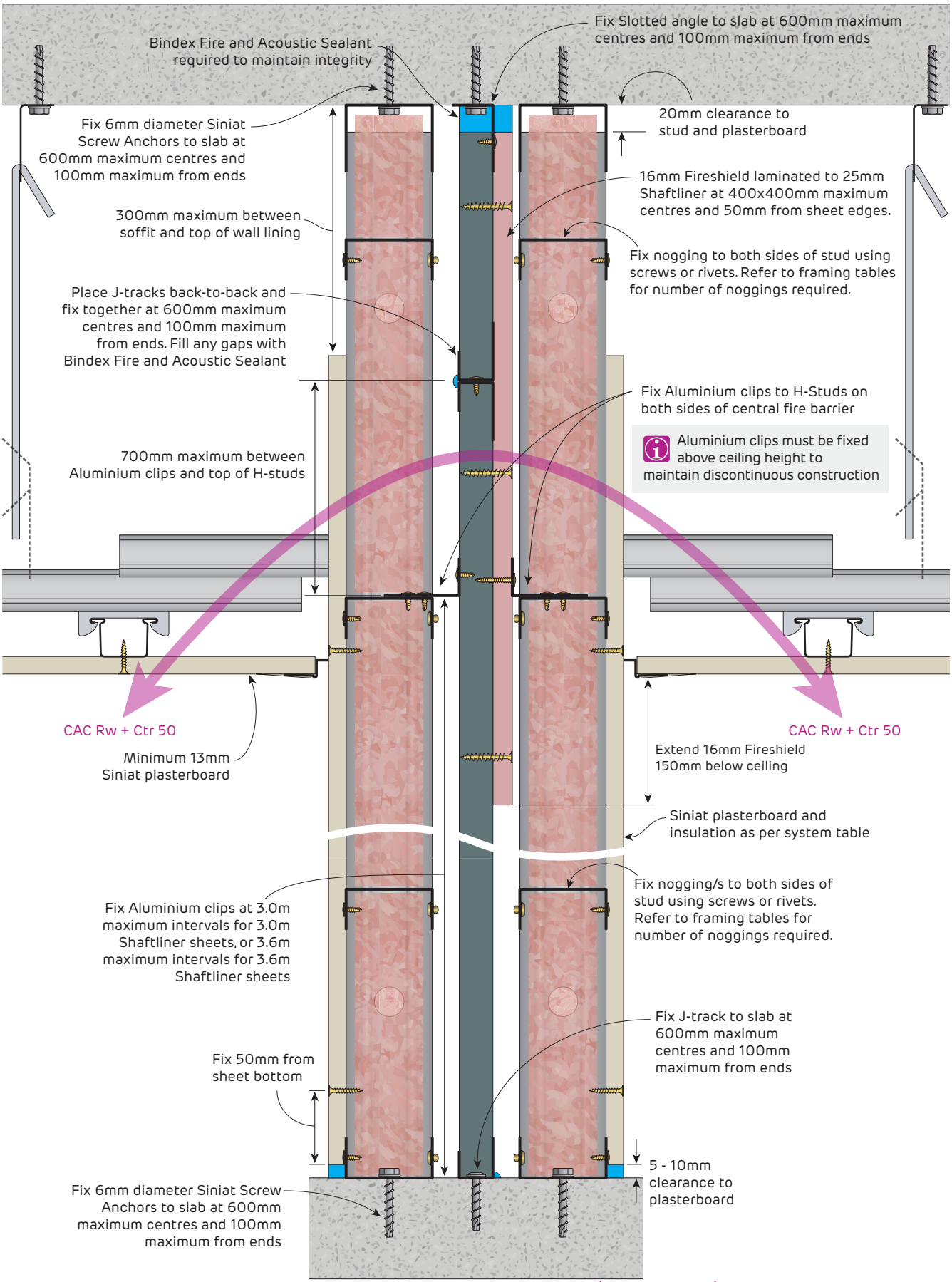

FIGURE 16 Walls above 3.0m/3.6m (H-stud length) to 7.2m
Slotted Steel Angle above Shaftliner
Section

Fire Rated

InterHome High-Rise Head Details with CAC Ceiling - FRL -/60/60

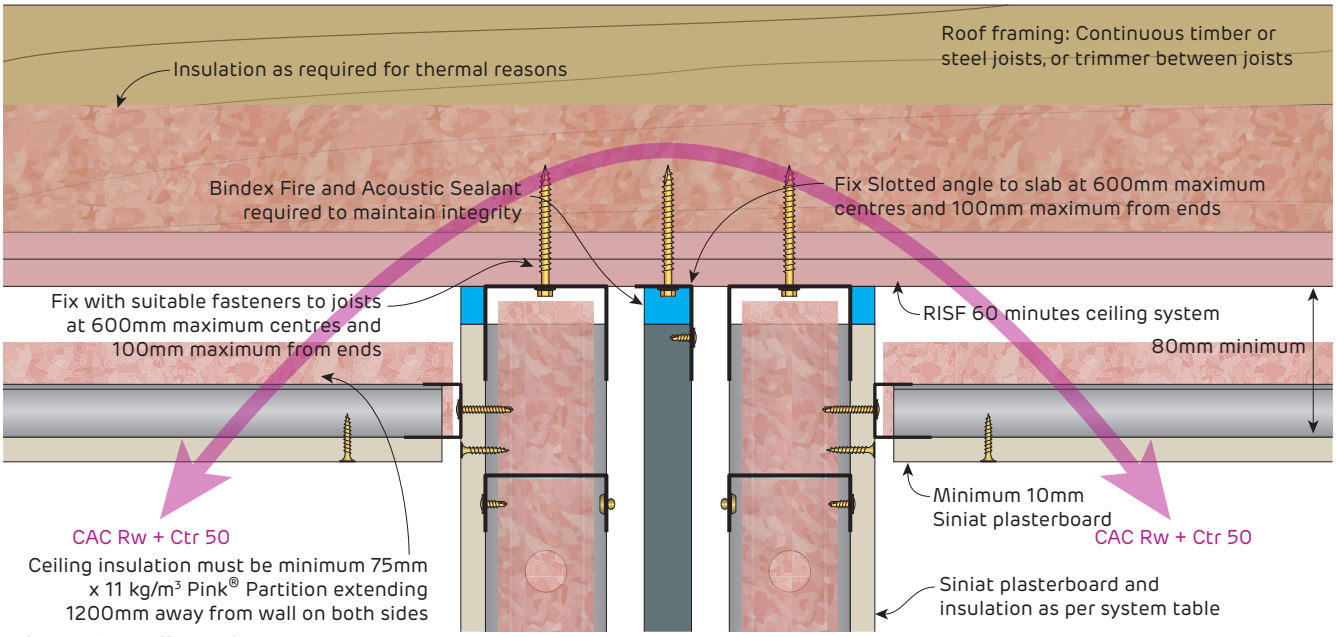

FIGURE 17 Wall Head
Slotted Steel Angle above Shaftliner Section

Fire Rated

InterHome High-Rise Details - FRL -/60/60

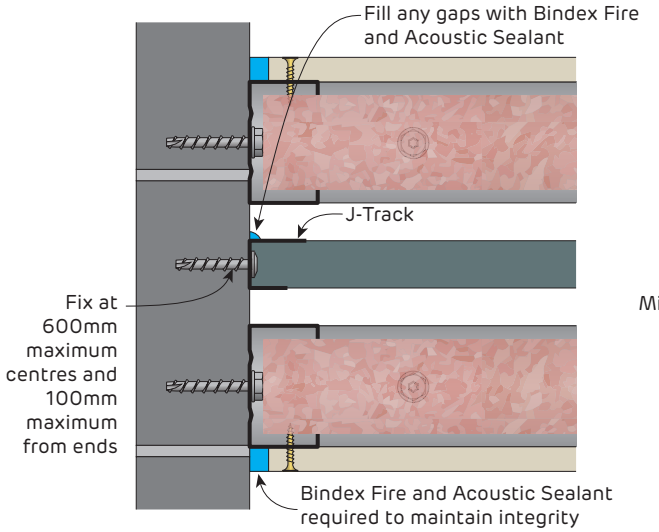

FIGURE 18 Wall End to Masonry
J-track
Plan

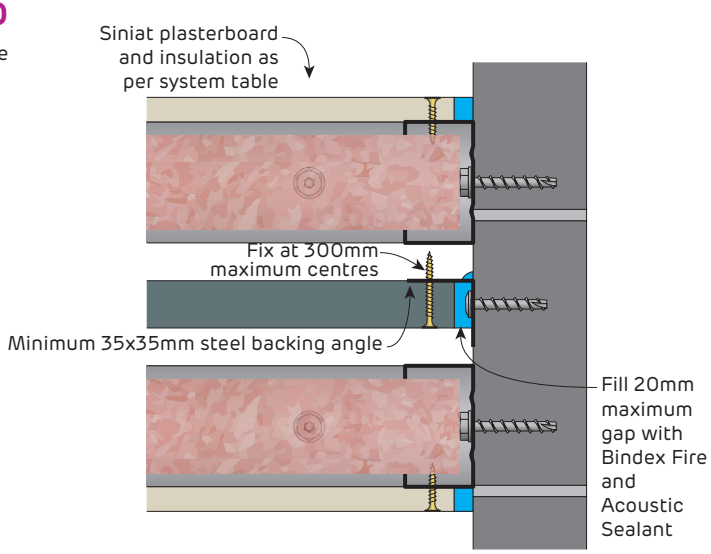

FIGURE 19 Wall End to Masonry
Steel angle
Plan

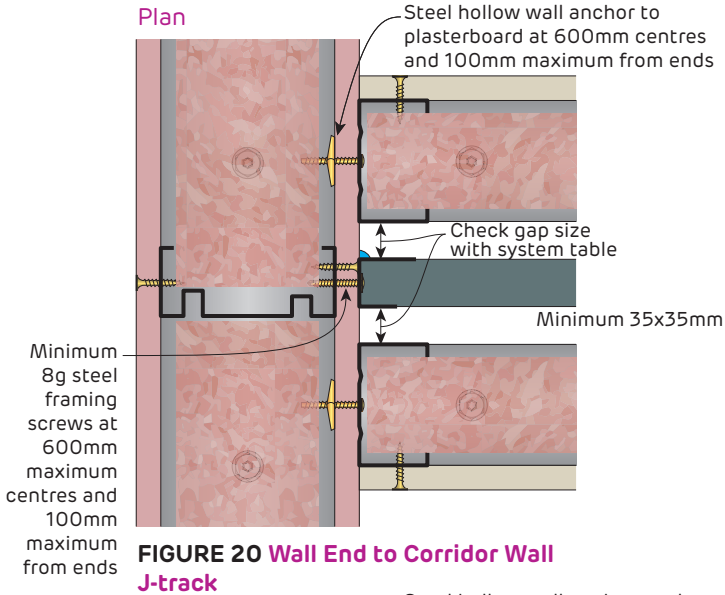

FIGURE 20 Wall End to Corridor Wall
J-track
Plan

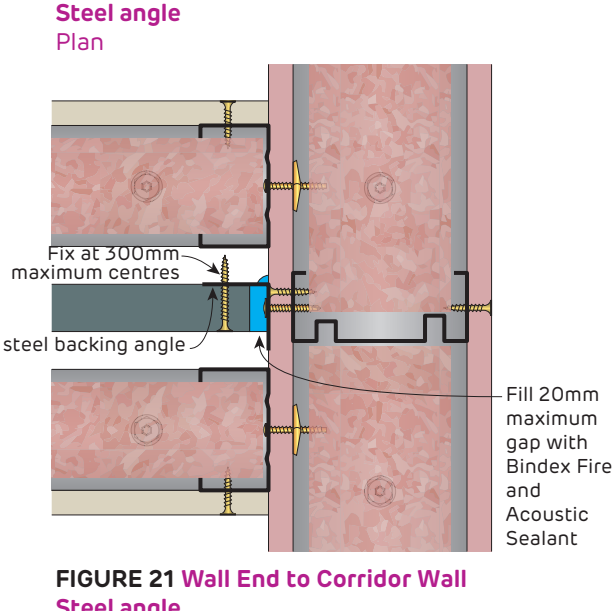

FIGURE 21 Wall End to Corridor Wall
Steel angle
Plan

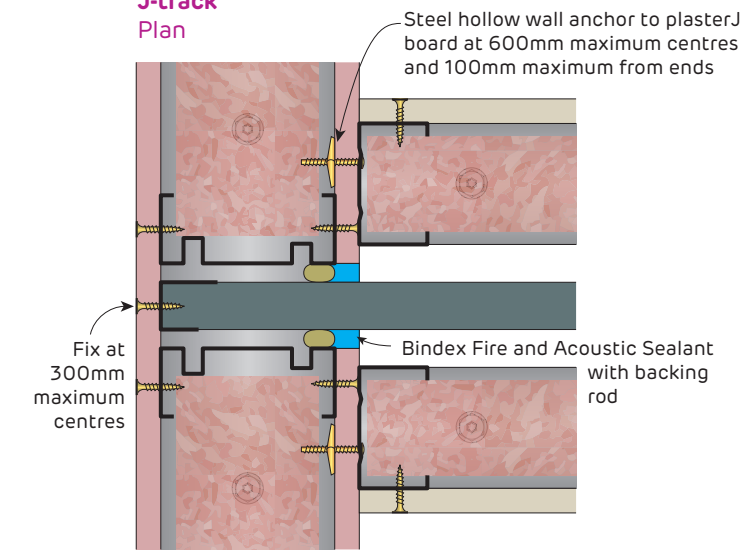

FIGURE 22 Wall End to Corridor Wall
Improved Acoustic Detail - J-track
Plan

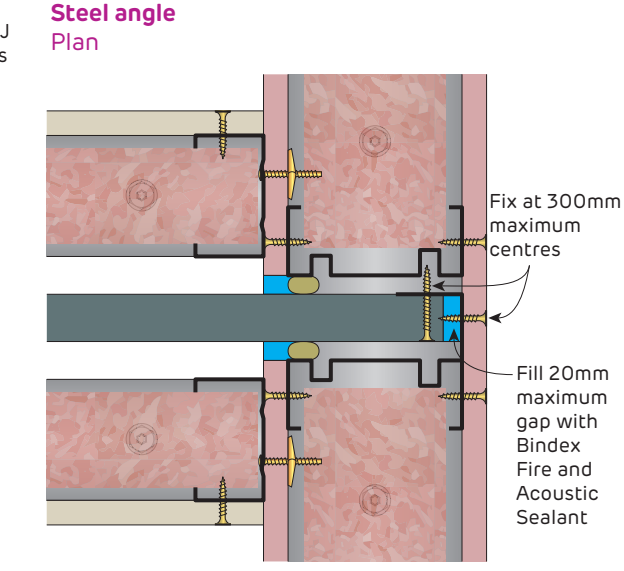

FIGURE 23 Wall End to Corridor Wall
Improved Acoustic Detail - Steel angle
Plan

Fill any gaps with Bindex Fire and Acoustic Sealant to maintain integrity

Fire Rated

InterHome High-Rise Details - FRL -/60/60

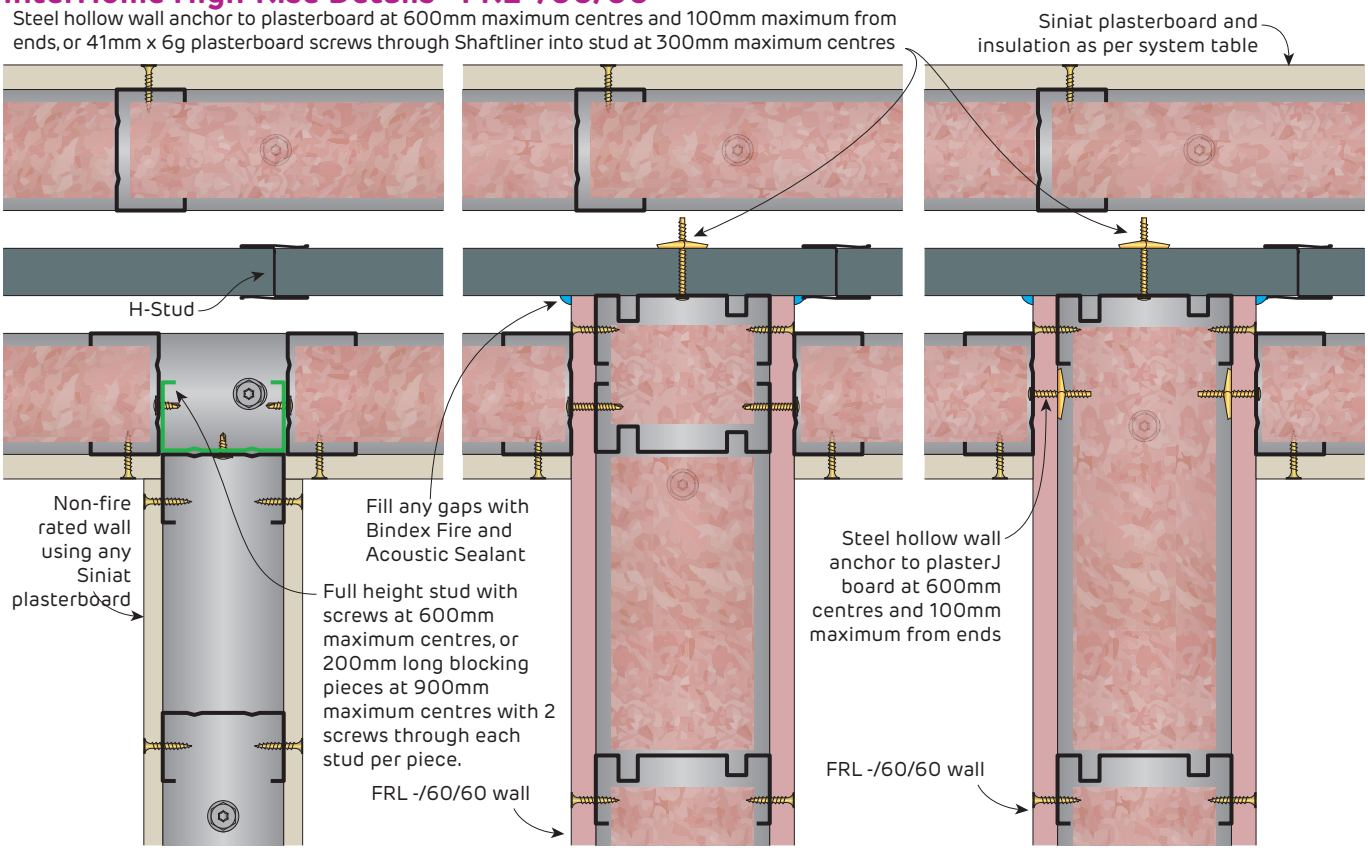

FIGURE 24 Wall Intersection with Non-Fire Rated Wall
Plan

FIGURE 25 Wall Intersection with Fire Rated Wall
Plan

FIGURE 26 Wall Intersection with Fire Rated Wall
Plan

Fill any gaps with Bindex Fire and Acoustic Sealant to maintain integrity

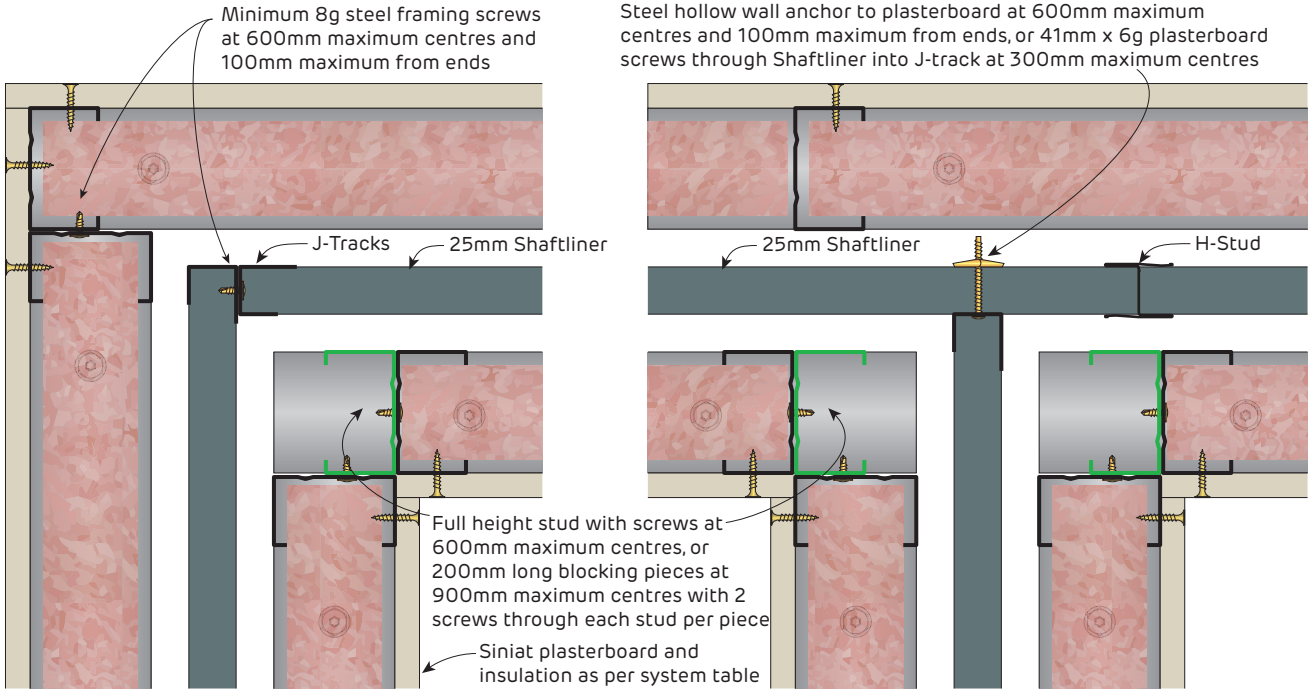

FIGURE 27 Wall Corner
Plan

FIGURE 28 Corridor Wall to Inter-tenancy Wall Junction
Plan

Fire Rated

InterHome High-Rise Details - FRL -/60/60

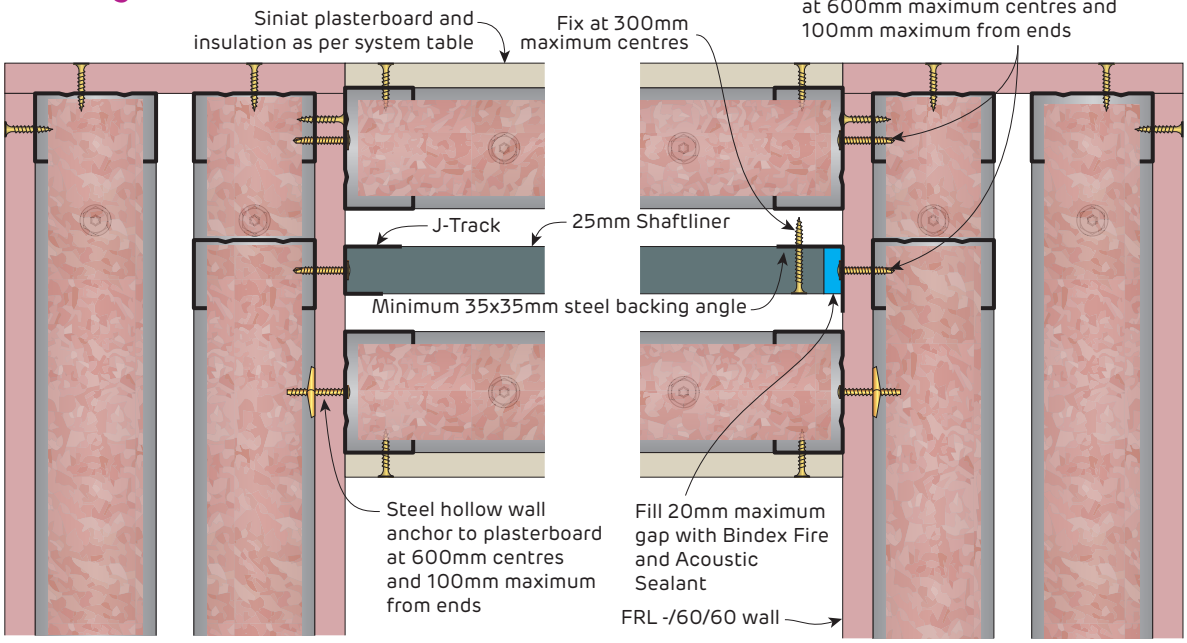

FIGURE 29 InterHome High-Rise Wall Connection to Fire Rated Plasterboard Wall
Plan

FIGURE 30 InterHome High-Rise Wall Connection to Fire Rated Plasterboard Wall
Plan

Fill any gaps with Bindex Fire and Acoustic Sealant to maintain integrity

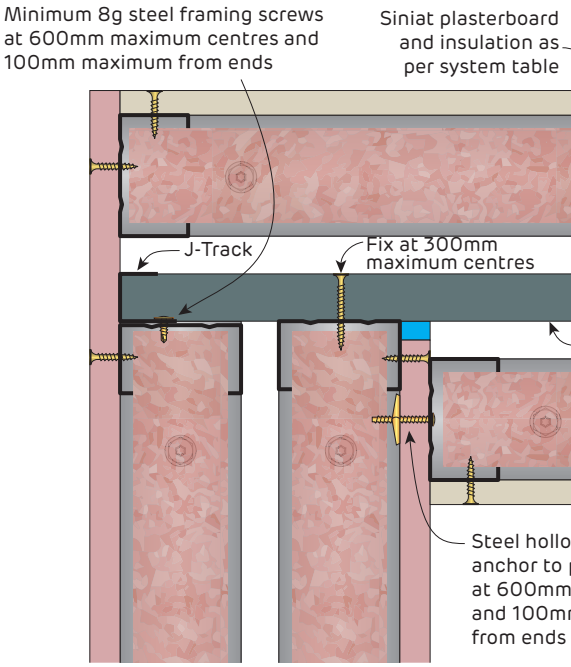

FIGURE 31 InterHome High-Rise Wall Connection to Fire Rated Plasterboard Wall
Plan

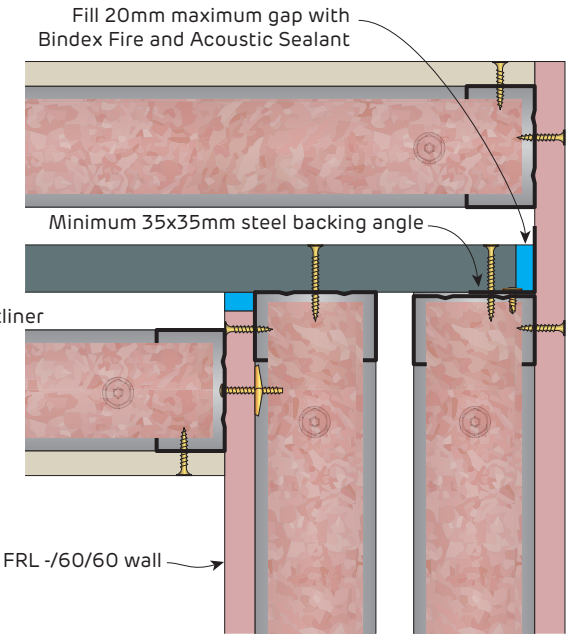

FIGURE 32 InterHome High-Rise Wall Connection to Fire Rated Plasterboard Wall
Plan

Fire Rated
InterHome High-Rise Details - FRL -/60/60

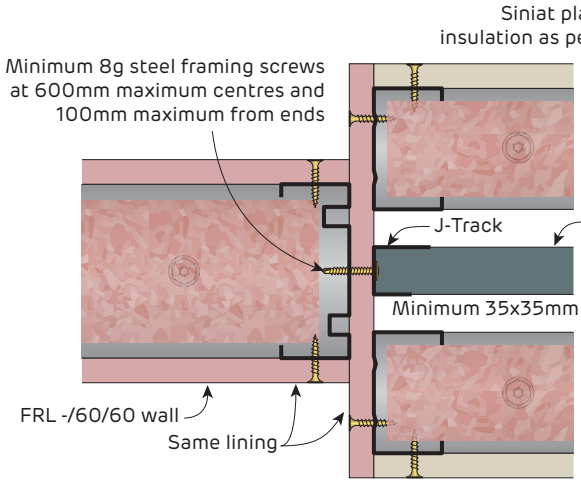

FIGURE 33 InterHome High-Rise Wall Transition to Single Stud Fire Rated Plasterboard Wall
Plan

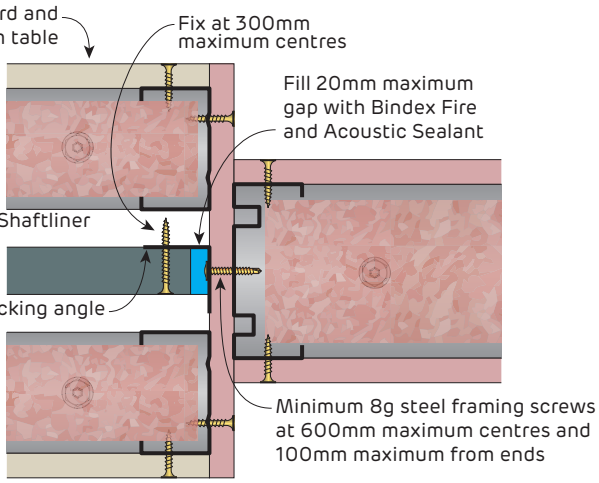

FIGURE 34 InterHome High-Rise Wall Transition to Single Stud Fire Rated Plasterboard Wall
Plan

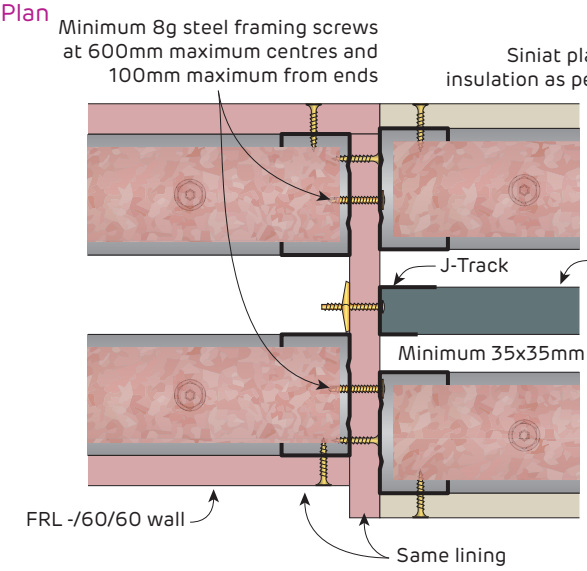

FIGURE 35 InterHome High-Rise Wall Transition to Double Stud Fire Rated Plasterboard Wall
Plan

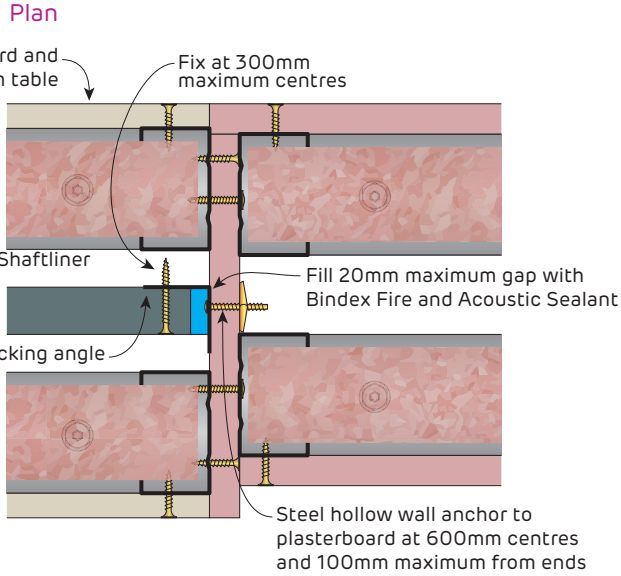

FIGURE 36 InterHome High-Rise Wall Transition to Double Stud Fire Rated Plasterboard Wall
Plan

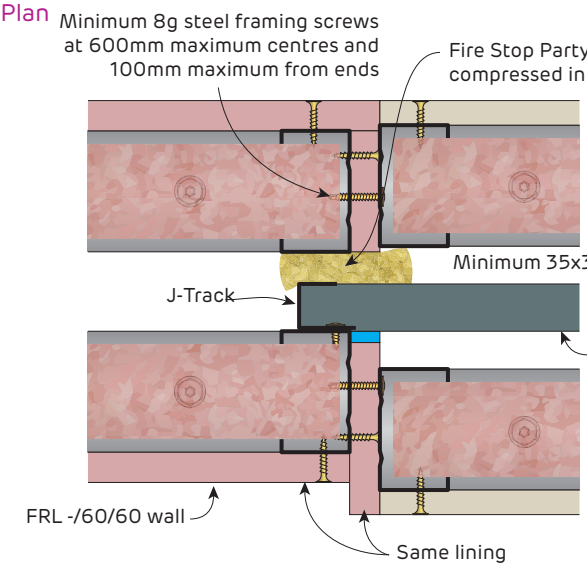

FIGURE 37 InterHome High-Rise Wall Transition to Double Stud Fire Rated Plasterboard Wall
Plan

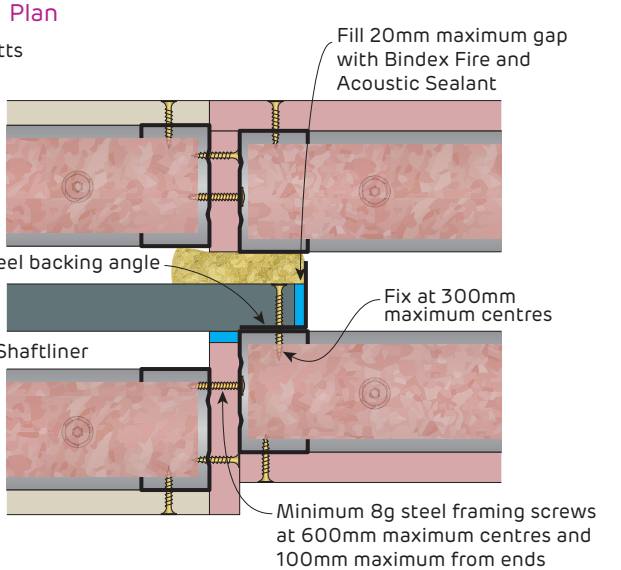

FIGURE 38 InterHome High-Rise Wall Transition to Double Stud Fire Rated Plasterboard Wall
Plan

Fire Rated

InterHome High-Rise Around Column Details - FRL -/60/60

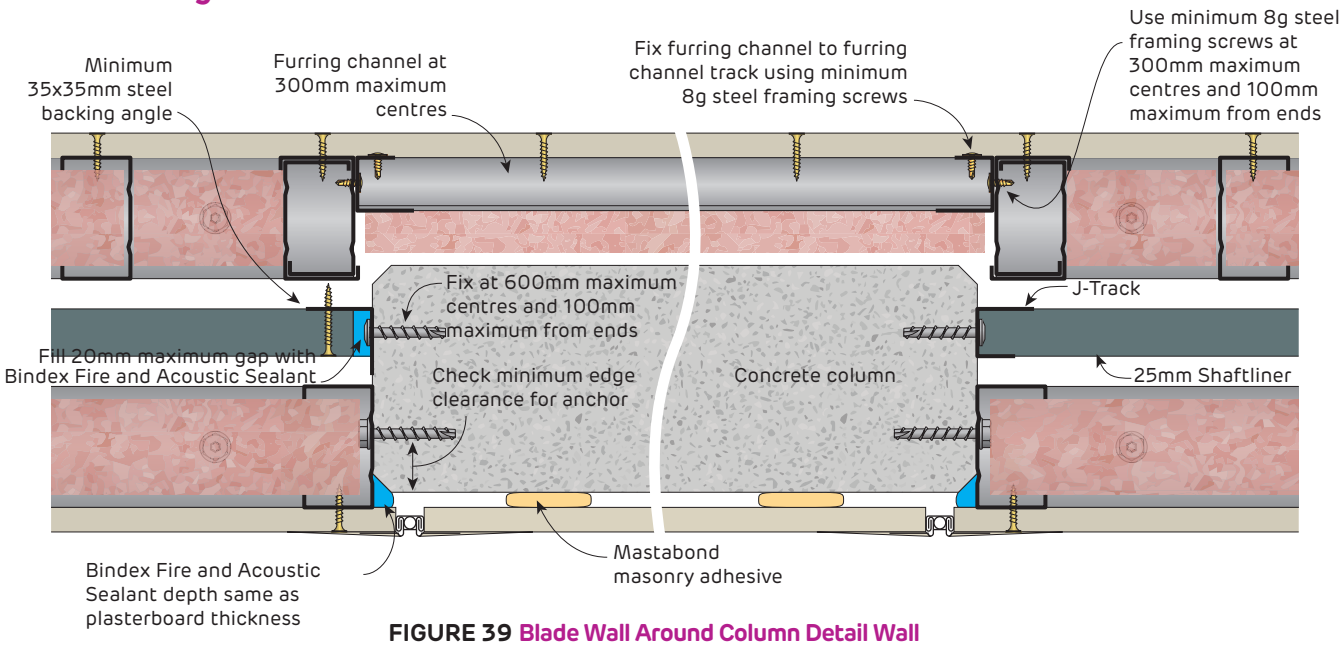

FIGURE 39 Blade Wall Around Column Detail Wall
Plan

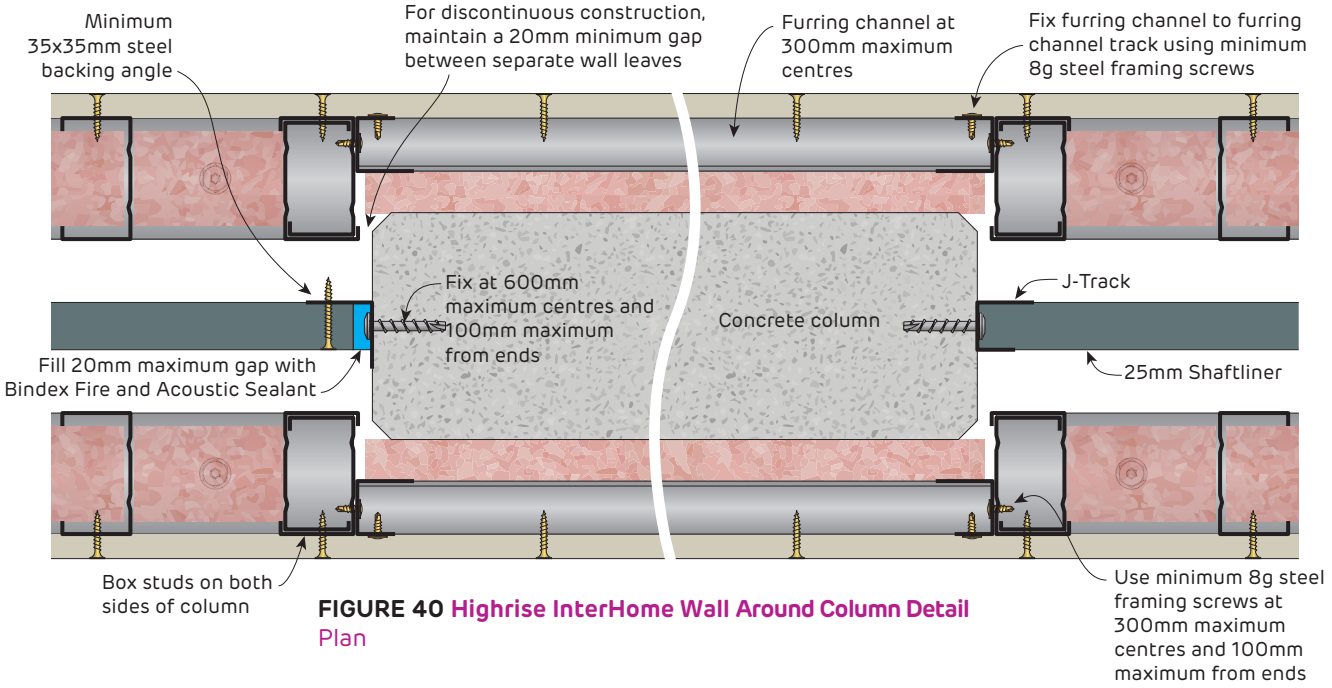

FIGURE 40 Highrise InterHome Wall Around Column Detail
Plan

Fire Rated
InterHome High-Rise Details - FRL -/60/60

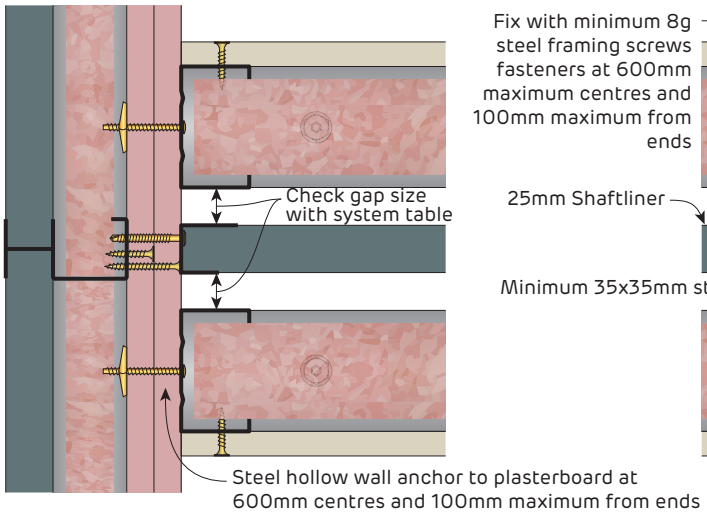

FIGURE 41 InterHome High-Rise Wall to Shaft Wall
Plan

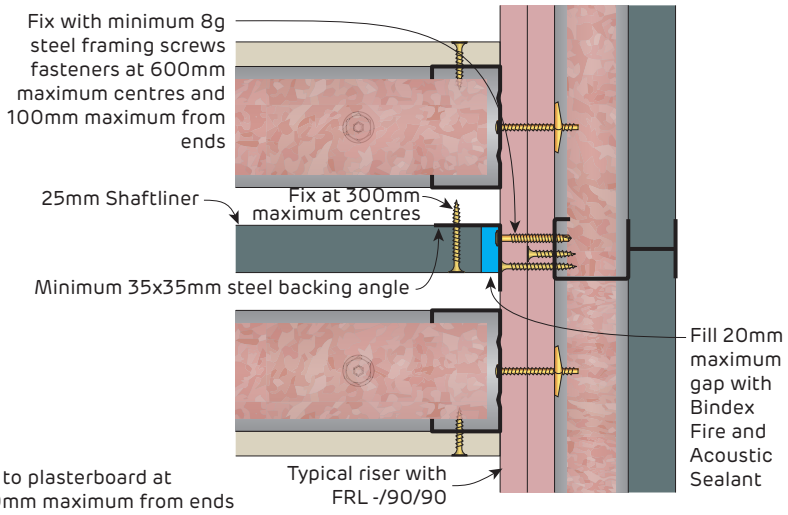

FIGURE 42 InterHome High-Rise Wall to Shaft Wall
Plan

Low sound flanking resistance for separating walls

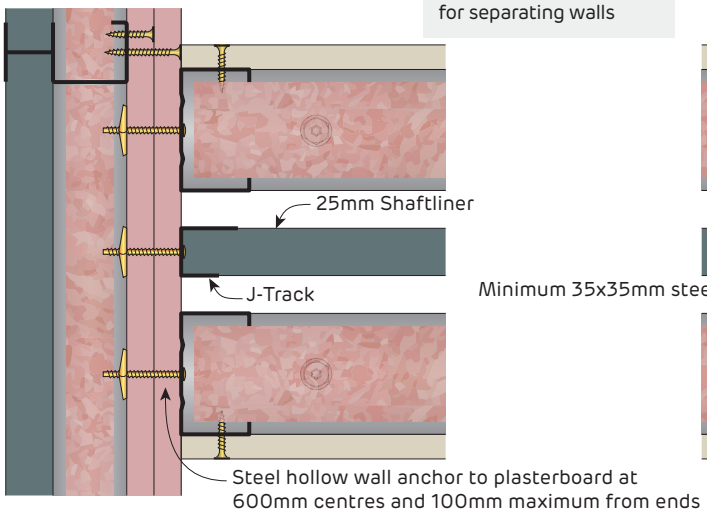

FIGURE 43 InterHome High-Rise Wall to Shaft Wall
Plan

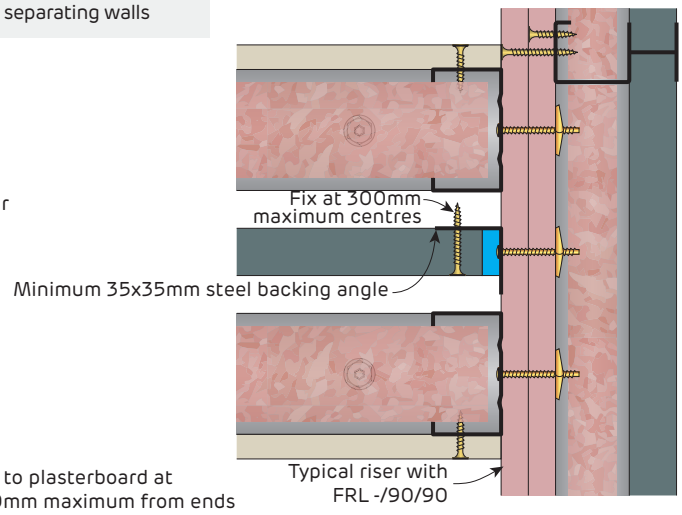

FIGURE 44 InterHome High-Rise Wall to Shaft Wall
Plan

Low sound flanking resistance for separating walls

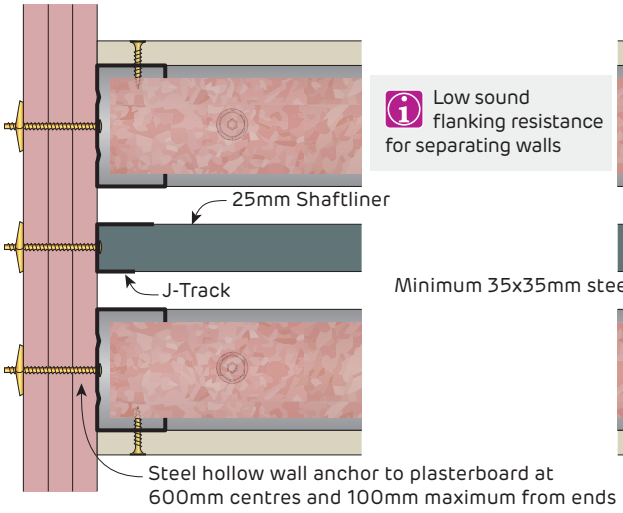

FIGURE 45 InterHome High-Rise Wall to Laminated Vertical Duct
Plan

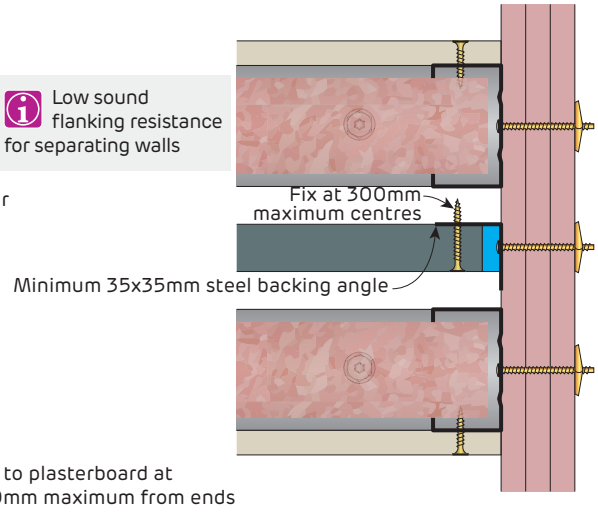

FIGURE 46 InterHome High-Rise Wall to Laminated Vertical Duct
Plan

Fire Rated
InterHome High-Rise Details - FRL -/60/60

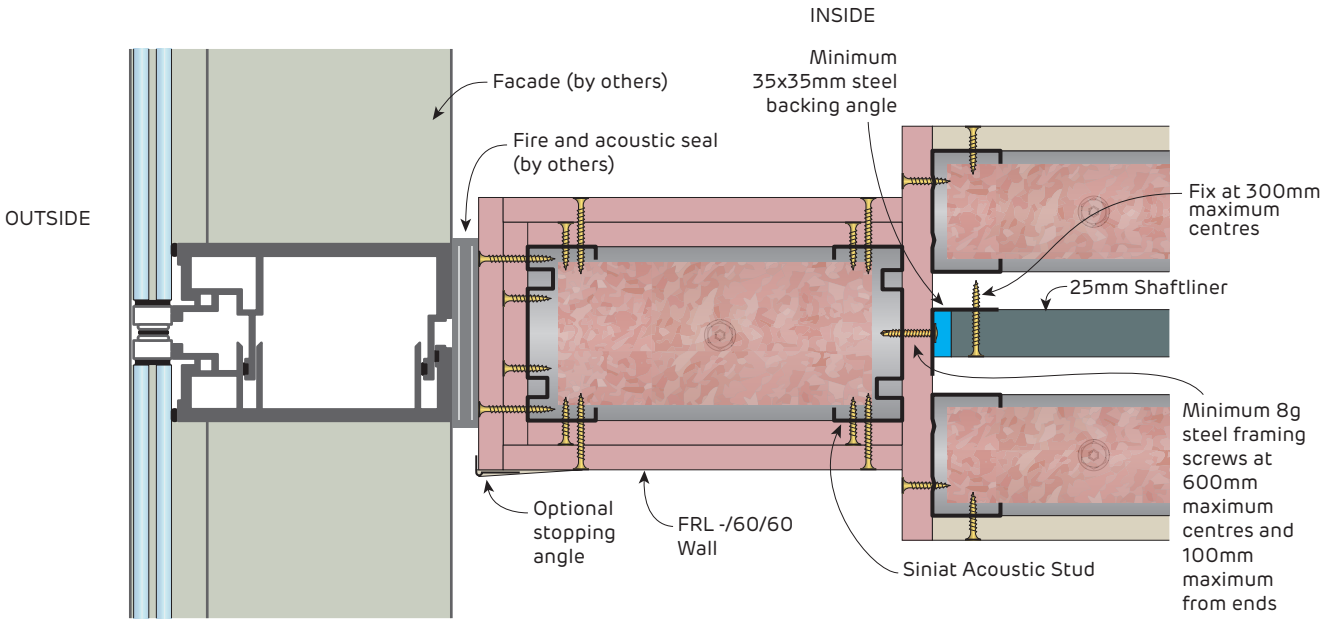

FIGURE 47 InterHome High-Rise Wall Transition to Curtain Wall Mullion
Plan

Consider project specific requirements before joining internal partition walls to facades

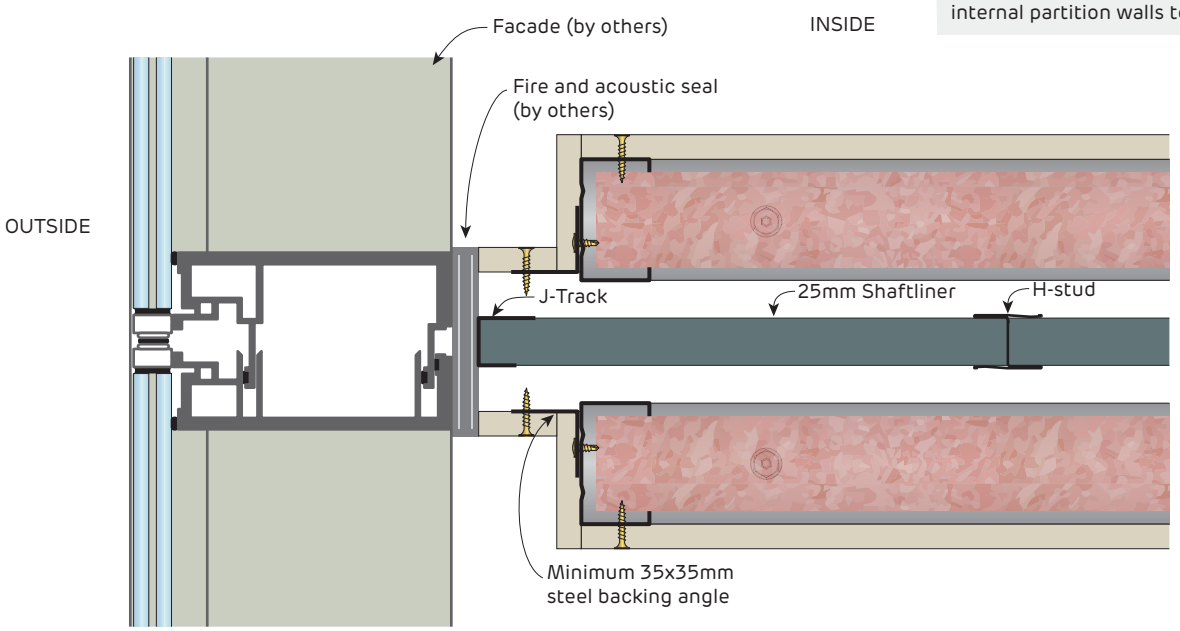

FIGURE 48 InterHome High-Rise Wall Transition to Curtain Wall Mullion
Plan

Fire Rated

InterHome High-Rise Penetration Details - FRL -/60/60

Prevent contact between all services and the central fire barrier.

Penetrations in wall linings can be back-to-back. Penetrations through the central fire barrier must be in accordance with an approved detail.

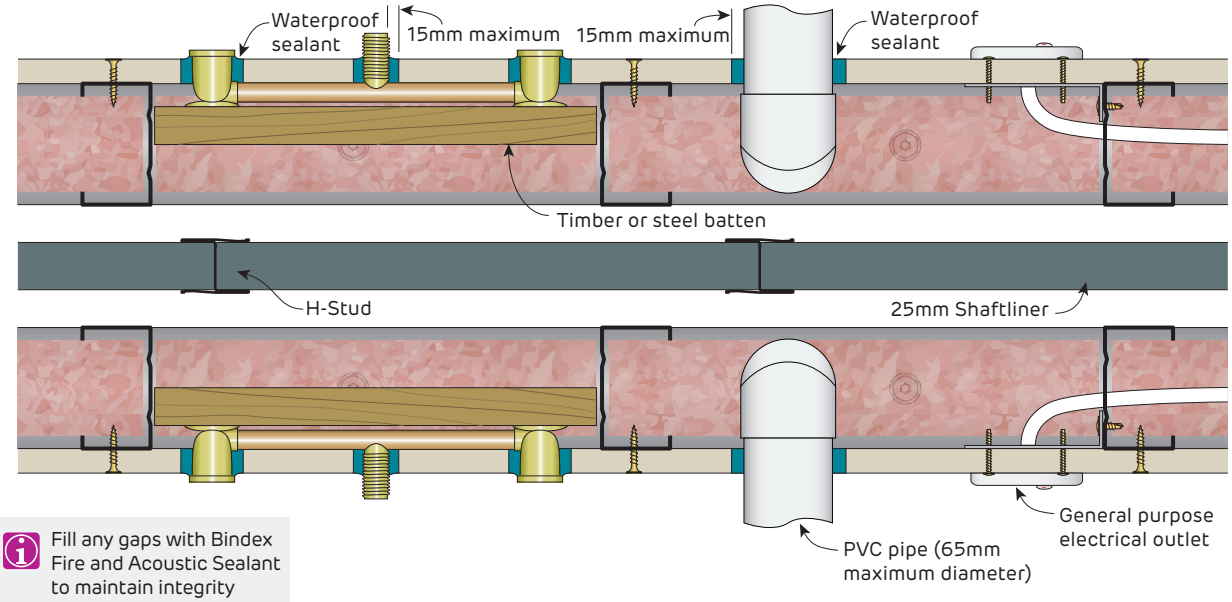

Fill any gaps with Bindex Fire and Acoustic Sealant to maintain integrity

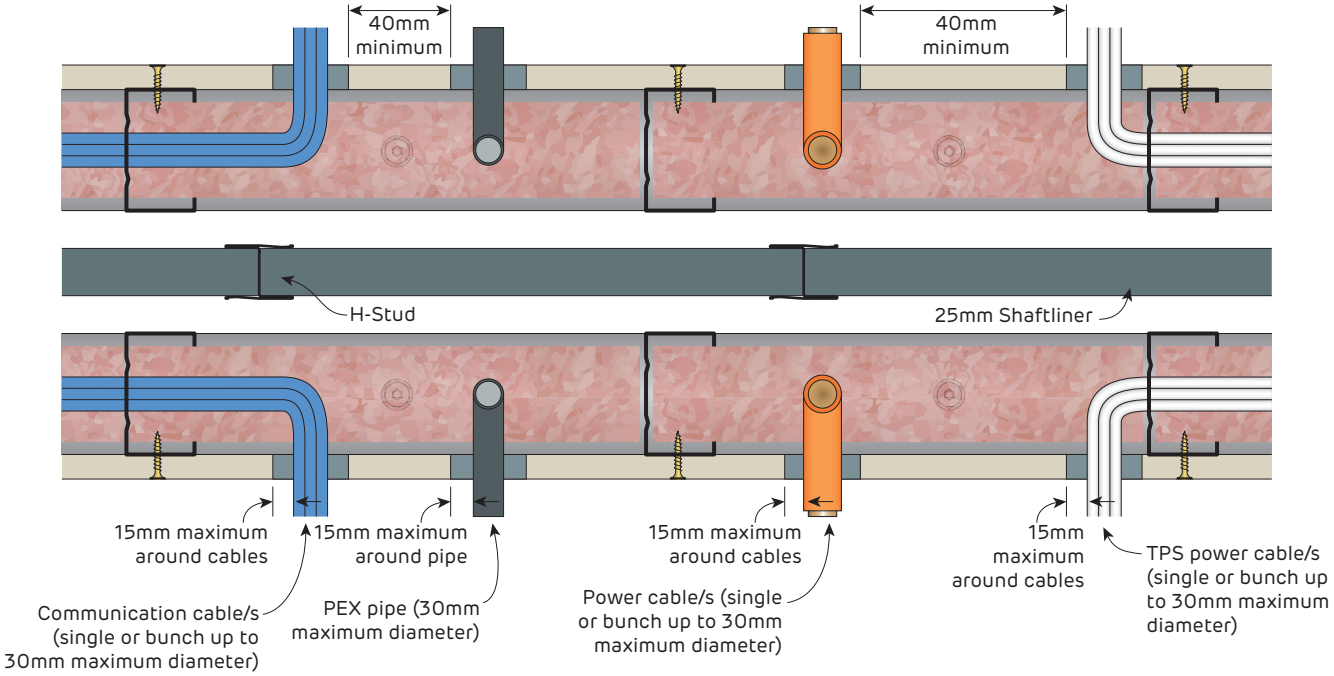

FIGURE 49 Plumbing and Electrical Penetrations in Wall Linings
Plan

Fire Rated

Patching of Central Fire Barrier - 50 x 50mm maximum opening

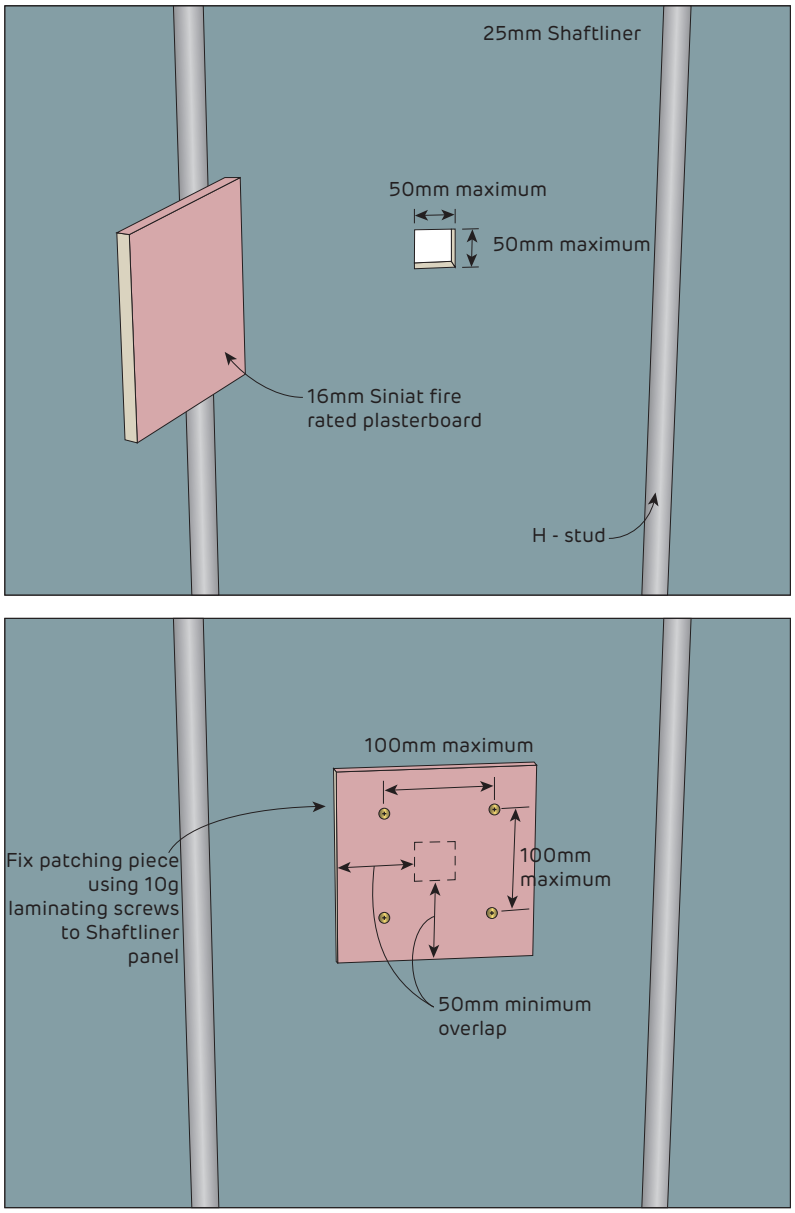

Fill any gaps with Bindex Fire and Acoustic Sealant to maintain integrity

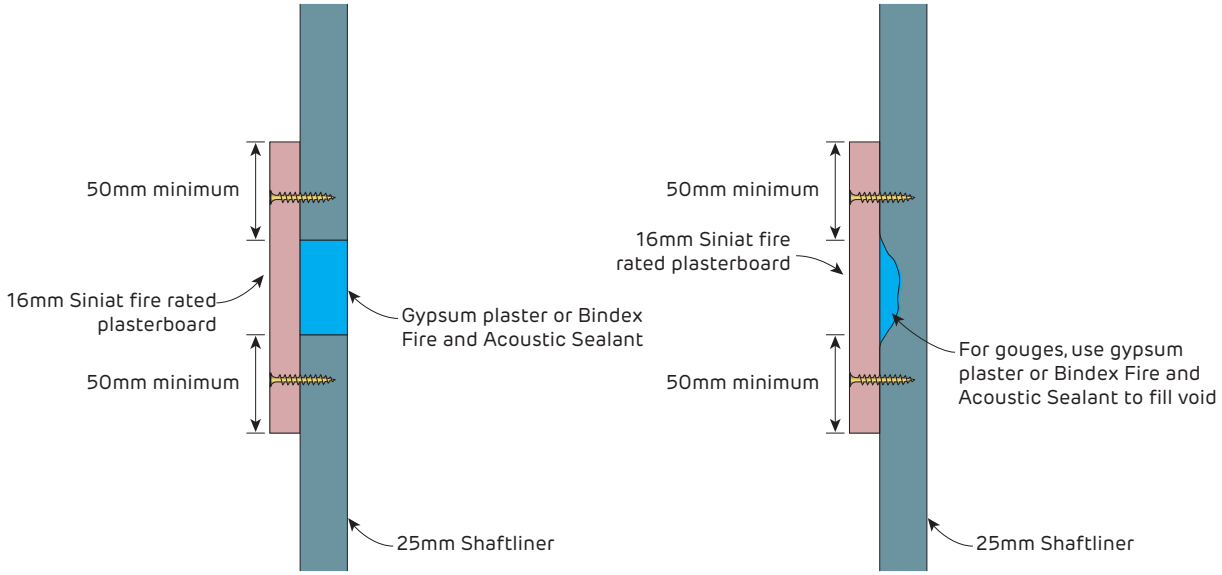

FIGURE 50 Fire Rated Patch for Shaftliner panel
Section - FRL -/60/60

Fire Rated

Patching of Central Fire Barrier - 300 x 300mm maximum opening

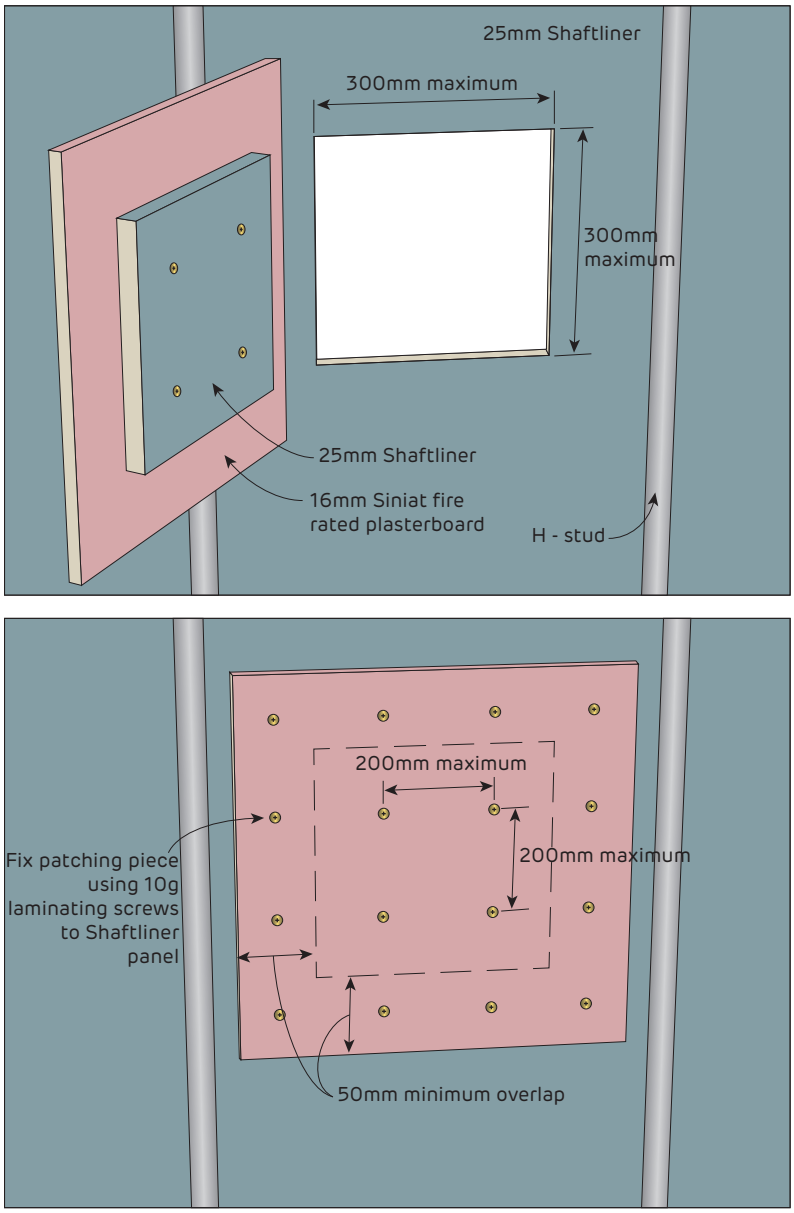

Fill any gaps with Bindex Fire and Acoustic Sealant to maintain integrity

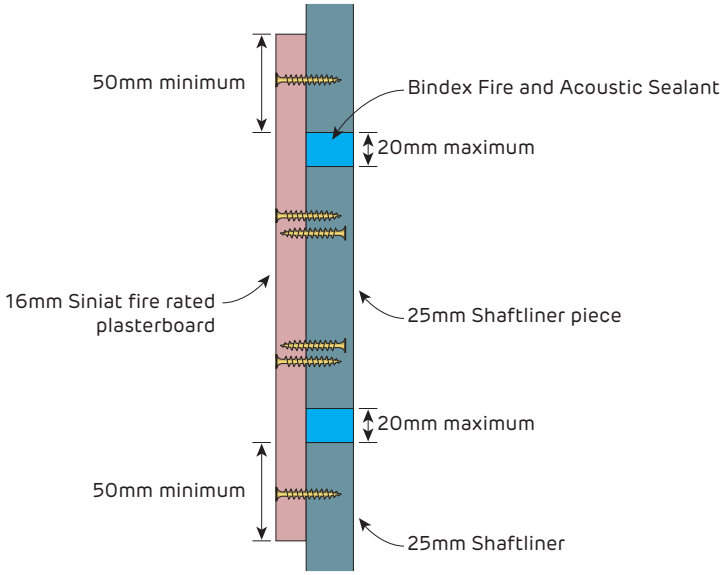

FIGURE 51 Fire Rated Patch for Shaftliner panel
Section - FRL -/60/60

Fire Rated
Patching of Central Fire Barrier - Crack in Shaftliner

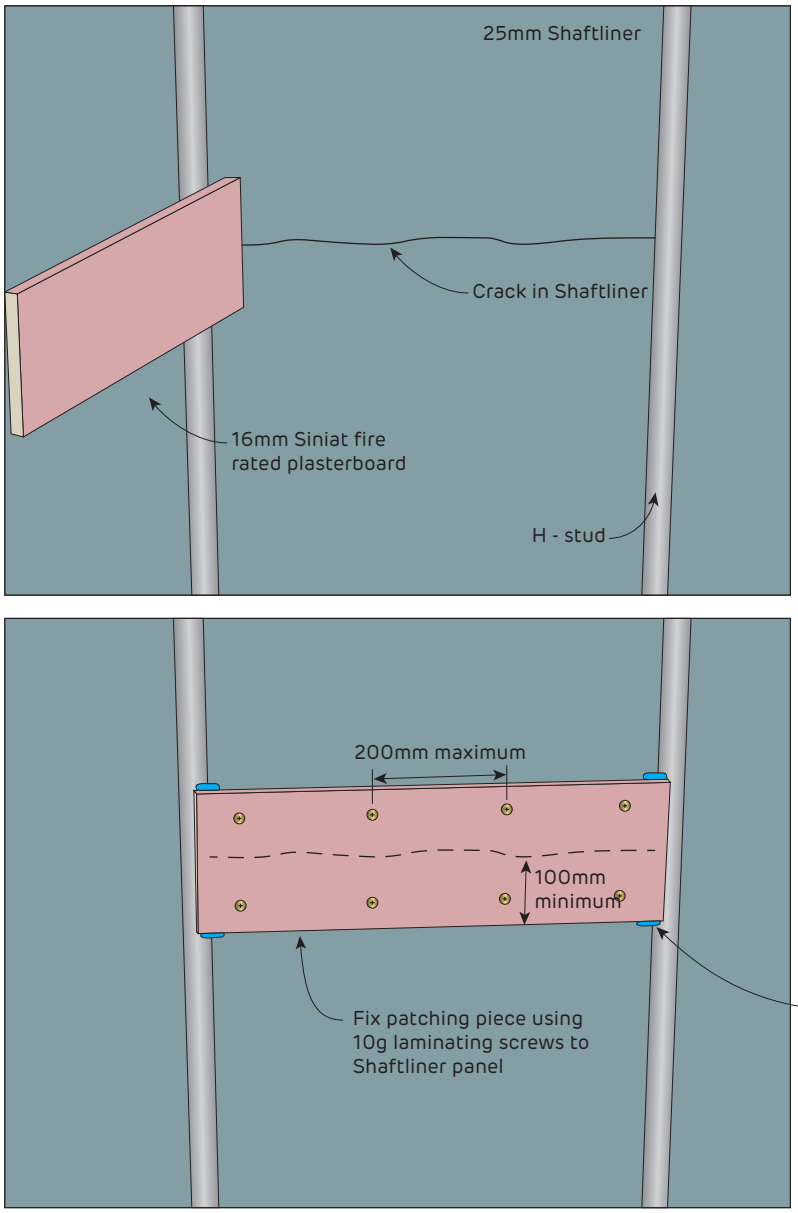

FIGURE 52 Fire Rated Patch for Shaftliner panel
Section - FRL -/60/60



SYSTEMS	**323**
INSTALLATION	**324**
COMPONENTS	324
GENERAL REQUIREMENTS	325
FRAMING	325
INSTALLATION SEQUENCE	326
PLASTERBOARD LAYOUT	327
PLASTERBOARD FIXING	327
CONSTRUCTION DETAILS	**332**

3.7 Shaft Wall

Shaft Wall systems are fire rated non-load bearing walls commonly used for shafts and service ducts. The Shaft Wall system is not suitable to operate as an air supply duct while exposed to an external fire or to contain products of combustion, ie: smoke exhaust. Shaft Wall systems have been tested to *AS 1530.4 Part 4: Fire-resistance tests for elements of construction*, but not Part 9 (Air Ducts).

Shaft Wall systems are ideal when constructing a wall where access is only possible from one side. This side is referred to as the storey side.

Shaft Wall has advantages compared with masonry construction:

- 75% lighter
- Thinner – typically less than 100mm wide using 64mm CH-Studs
- No wet trades required
- Faster installation – no scaffolding is required inside the shaft.

SHW1

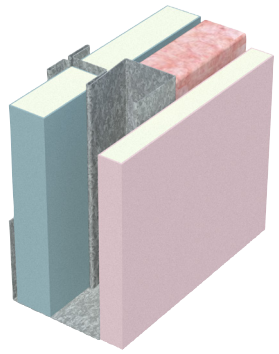

- 25mm **shaft**liner encased in Shaft Wall CH-studs
- 1 layer of 16mm **fire**shield

fireshield can be substituted with **multi**shield or **tru**rock

Fire Resistance Level

-/60/60
rated from both sides

Report FAR2863

CH-stud Size (mm)		Maximum Height (m)		Wall Width (mm)	Sound Insulation Rw (Rw + Ctr) for studs at 600mm centres and thinnest BMT		
Depth	BMT	Ws 0.25 kPa Stud Spacing (mm) 600	Ws 0.35 kPa Stud Spacing (mm) 600		No insulation	Pink® Partition 50mm 11 kg/m³ R1.2	Report
64	0.55	2.95	2.64	80	39 (32)	46 (39)	Day Design 3094-18
	0.9	3.46	3.09				
102	0.55	3.73	2.66	118	42 (33)	48 (41)	
	0.9	4.98	4.19				

SHW2

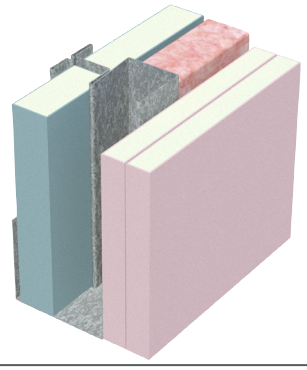

- 25mm **shaft**liner encased in Shaft Wall CH-studs
- 2 layers of 16mm **fire**shield

fireshield can be substituted with **multi**shield or **tru**rock

Fire Resistance Level

-/120/120
rated from both sides

Report FAR2863

CH-stud Size (mm)		Maximum Height (m)		Wall Width (mm)	Sound Insulation Rw (Rw + Ctr) for studs at 600mm centres and thinnest BMT		
Depth	BMT	Ws 0.25 kPa Stud Spacing (mm) 600	Ws 0.35 kPa Stud Spacing (mm) 600		No insulation	Pink® Partition 50mm 11 kg/m³ R1.2	Report
64	0.55	3.73	2.66	96	44 (36)	50 (42)	Day Design 3094-18
	0.9	4.38	3.89				
102	0.55	3.73	2.66	134	46 (37)	52 (46)	
	0.9	5.54	4.19				

SHW3

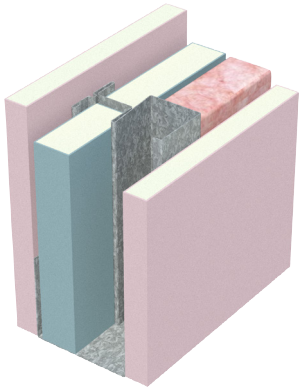

- 1 layer of 16mm **fire**shield
- 25mm **shaft**liner encased in Shaft Wall CH-studs
- 1 layer of 16mm **fire**shield

fireshield can be substituted with **multi**shield or **tru**rock

Fire Resistance Level

-/120/120
rated from both sides

Report FAR2863

CH-stud Size (mm)		Maximum Height (m)		Wall Width (mm)	Sound Insulation Rw (Rw + Ctr) for studs at 600mm centres and thinnest BMT		
Depth	BMT	Ws 0.25 kPa Stud Spacing (mm) 600	Ws 0.35 kPa Stud Spacing (mm) 600		No insulation	Pink® Partition 50mm 11 kg/m³ R1.2	Report
64	0.55	3.73	2.66	96	44 (35)	50 (42)	Day Design 3094-18
	0.9	4.38	3.89				
102	0.55	3.73	2.66	134	46 (36)	52 (45)	
	0.9	5.54	4.19				

Components

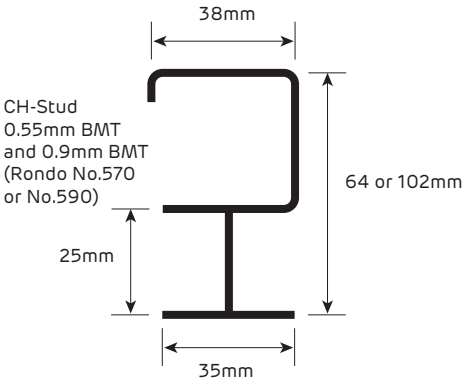

FIGURE 1 Shaft Wall CH-Stud
Section

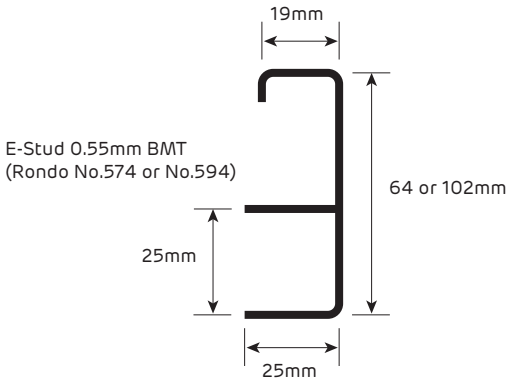

FIGURE 2 Shaft Wall E-Stud
Section

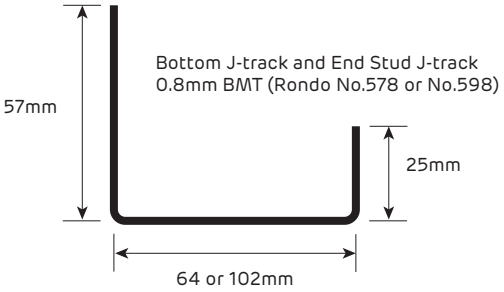

FIGURE 3 Shaft Wall J-Track
Section

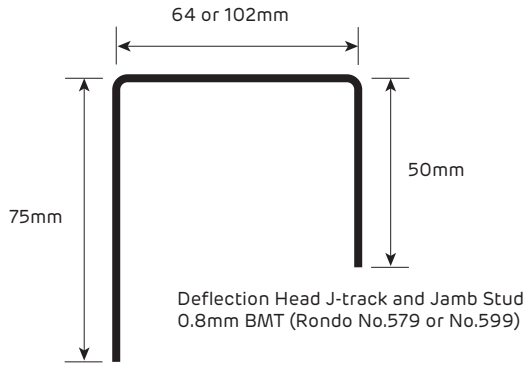

FIGURE 4 Shaft Wall Deflection Head J-Track
Section

General Requirements

	Fire Rated
Install control joints in plasterboard walls: > At 12m maximum intervals > At all control joints in the structure > At any change in the substrate	✓
Only joint the face layer. As a minimum, use paper tape with any Siniat jointing compound applied in one or two coats to the thickness of two coats. Alternatively, use **bindex** fire and acoustic sealant according to the Product Data Sheet.	✓
Use approved fire rated penetration details. Fire penetrations may require fire collars or other devices to maintain fire performance.	✓
Use **bindex** fire and acoustic sealant on all gaps and around perimeter.	✓
Attach all fixtures to studs or purpose installed noggings/blocking. Wall anchors must not be fixed only to the plasterboard of fire rated walls.	✓

For acceptable modifications or variations to fire rated systems, refer to Section 2.3 Fire Resistance

Framing

	Fire Rated
CH-studs as per framing table or structural design. Space CH-studs at 600mm (full **shaft**liner).	✓
Twist CH-studs into base tracks and push studs down completely.	✓

Table 1 Maximum Head and Base Track Anchor Spacing

Stud Spacing (mm)	Maximum Anchor Spacing (mm)
600	600

1. Additional anchors 100mm maximum from track ends.
2. 102mm studs require 2 anchors across width.

Table 2 Concrete Anchor Table

Wall Height (m)	Anchor
0 - 6.92	SA6x45

1. Concrete 20 MPa minimum. No edge / spacing effects.
2. Anchors at maximum 1.5 x stud spacing up to 600mm maximum, and also 100mm maximum from track ends.
3. 102mm CH-studs require 2 anchors across width.

Plumbing and electrical services must not protrude beyond the face of the studs.

Siniat Internal Wind Load Calculator

Refer to Section 2.3 for assistance determining the relevant internal wind pressures for a specific project. Or use the Siniat Internal Wind Load Calculator by clicking on the link or by using your phone's camera on the QR code.

Installation Sequence

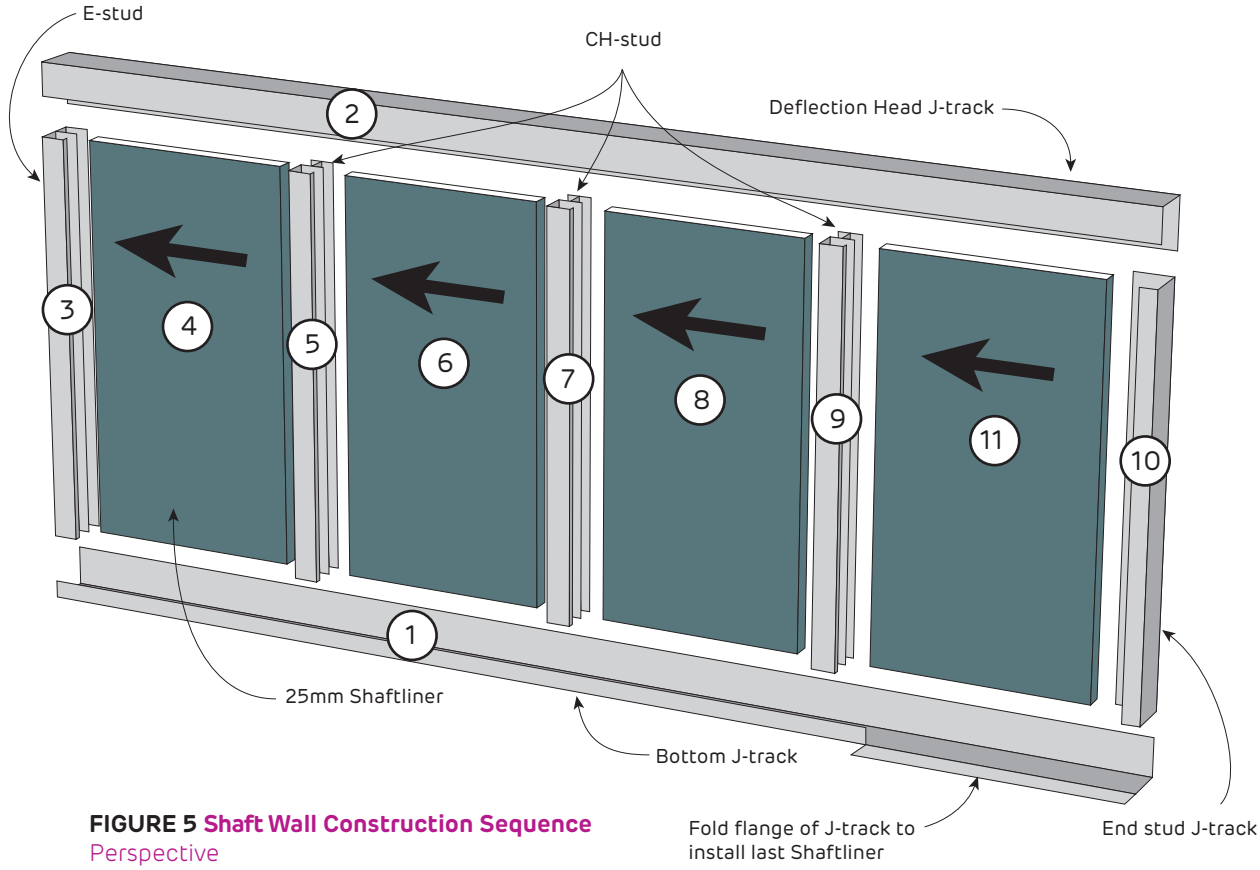

FIGURE 5 Shaft Wall Construction Sequence
Perspective

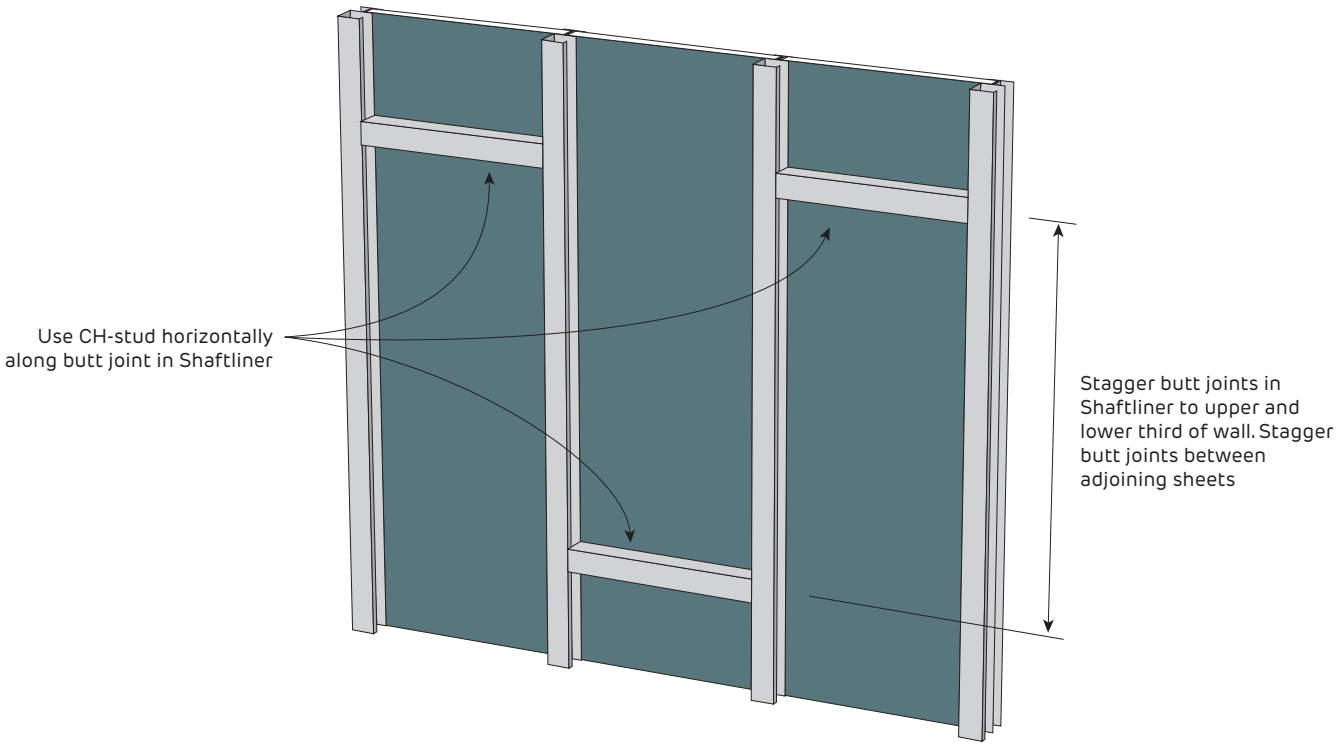

FIGURE 6 Shaftliner Butt Joint Layout
Perspective

Plasterboard Layout

	Fire Rated
Vertical joints must be 200mm minimum from the edge of any opening such as windows and doorways to minimise cracking at the joints.	✓
Fireshield Horizontal Layout	
Stagger butt joints by 300mm minimum on adjoining sheets and between layers.	✓
First layer butt joints must be backed by a CH-stud. Refer to installation diagrams.	✓
Stagger recessed edges by 300mm minimum between layers.	✓
Fireshield Vertical Layout	
Stagger butt joints by 300mm minimum on adjoining sheets and between layers.	✓
First layer butt joints must be backed by a nogging.	✓
Stagger recessed edges by 300mm minimum between layers.	✓
Shaftliner Layout	
If the wall height exceeds the length of **shaft**liner, position the **shaft**liner butt joints within the upper and lower third of the wall. [Refer to Figure 6]	✓
Stagger **shaft**liner butt joints for adjacent panels and reinforce with horizontal CH-stud cut to fit between the vertical studs. [Refer to Figure 6]	✓

> Install Fireshield horizontally when practical to reduce the effect of glancing light.

> Minimise butt joints by using long sheets.

Plasterboard Fixing

	Fire Rated
Use the 'Screw Only Method' in tiled or fire rated areas. Stud adhesive is not permitted.	✓
Drive screws to just below the sheet surface, taking care not to break the paper linerboard. For over-driven screws, install another screw 20mm away. Leave or remove the over-driven screw and patch.	✓
Laminating screws can be used to fix butt joints in the second and third layer.	✓

Screw Type and Minimum Size for the Installation of Plasterboard to Steel

Plasterboard Thickness	1st Layer	2nd Layer	3rd Layer
16mm **fire**shield	6g x 32mm screw	6g x 45mm screw *	8g x 65mm screw *
25mm **shaft**liner	6g x 45mm screw #	-	-

1. For steel ≤ 0.75mm BMT, use fine thread needle point screws.
2. For steel ≥ 0.75mm BMT, use fine thread drill point screws.
3. *10g x 38mm Laminating screws may be used as detailed in installation diagrams.
4. # For securing Shaftliner to J-track when the J-track is used as an end stud.

FIGURE 7 Shaft Wall Fire Rated 1 Layer - Horizontal
Screw Only Method

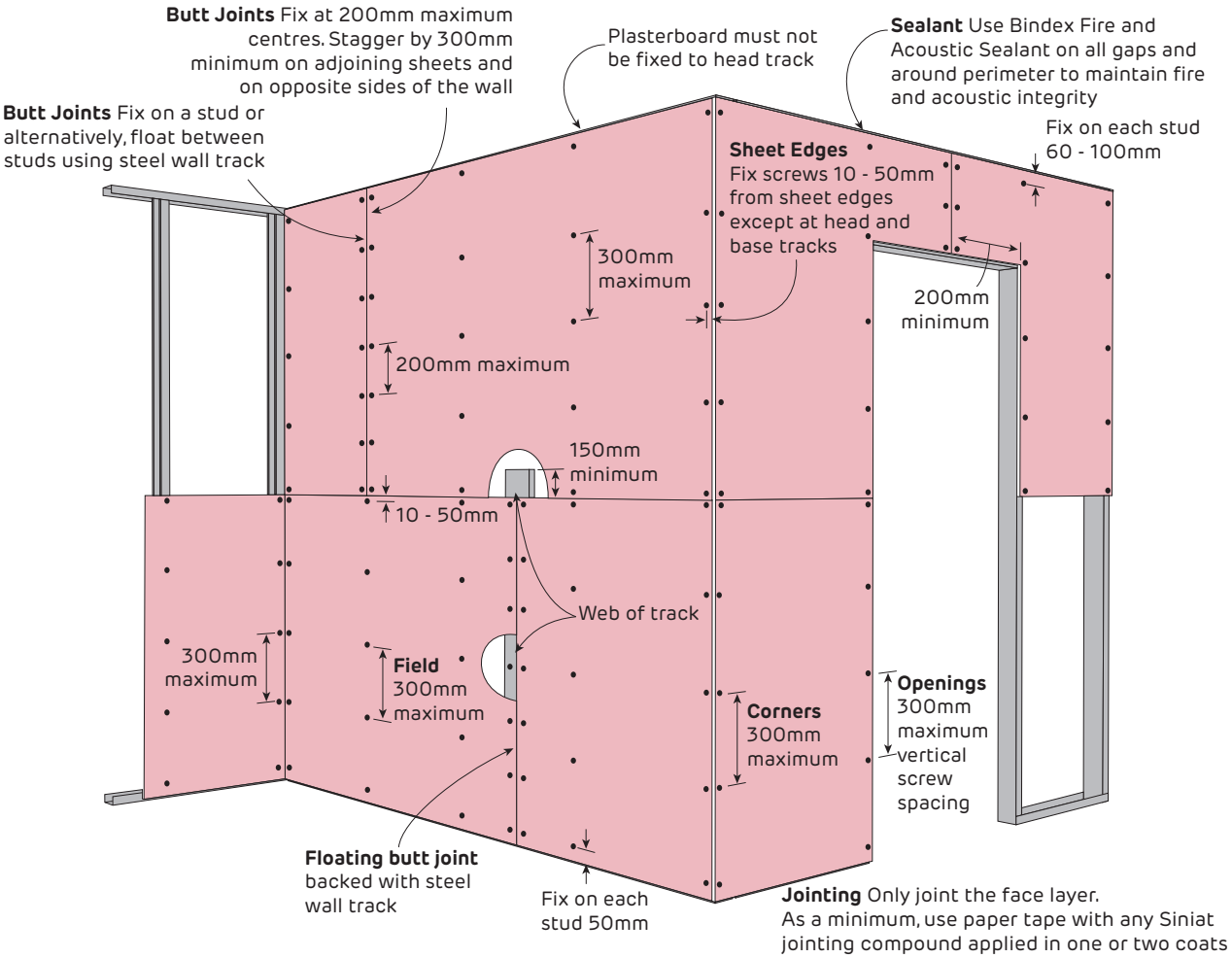

Fixing Pattern Table

Sheet Width	Fixing Pattern
600mm	S S S (3)
900mm	S S S S (4)
1200mm	S S S S S (5)
1350mm	S S S S S S (6)
1400mm	S S S S S S (6)

S = Screw

Maximum Ultimate Limit State Wind Load Table (kPa)

Plasterboard Thickness	Maximum Wall Stud Spacing			
	600mm	450mm	400mm	300mm
13mm	0.85	1.15	1.30	1.70
16mm	0.85	1.15	1.30	1.70

1. Calculations do not include the framing which must be independently designed to suit the desired loads.
2. If higher internal wind pressures are expected, please contact Siniat for specific design.

FIGURE 8 Shaft Wall Fire Rated 2 Layers - Horizontal + Horizontal
Screw Only Method

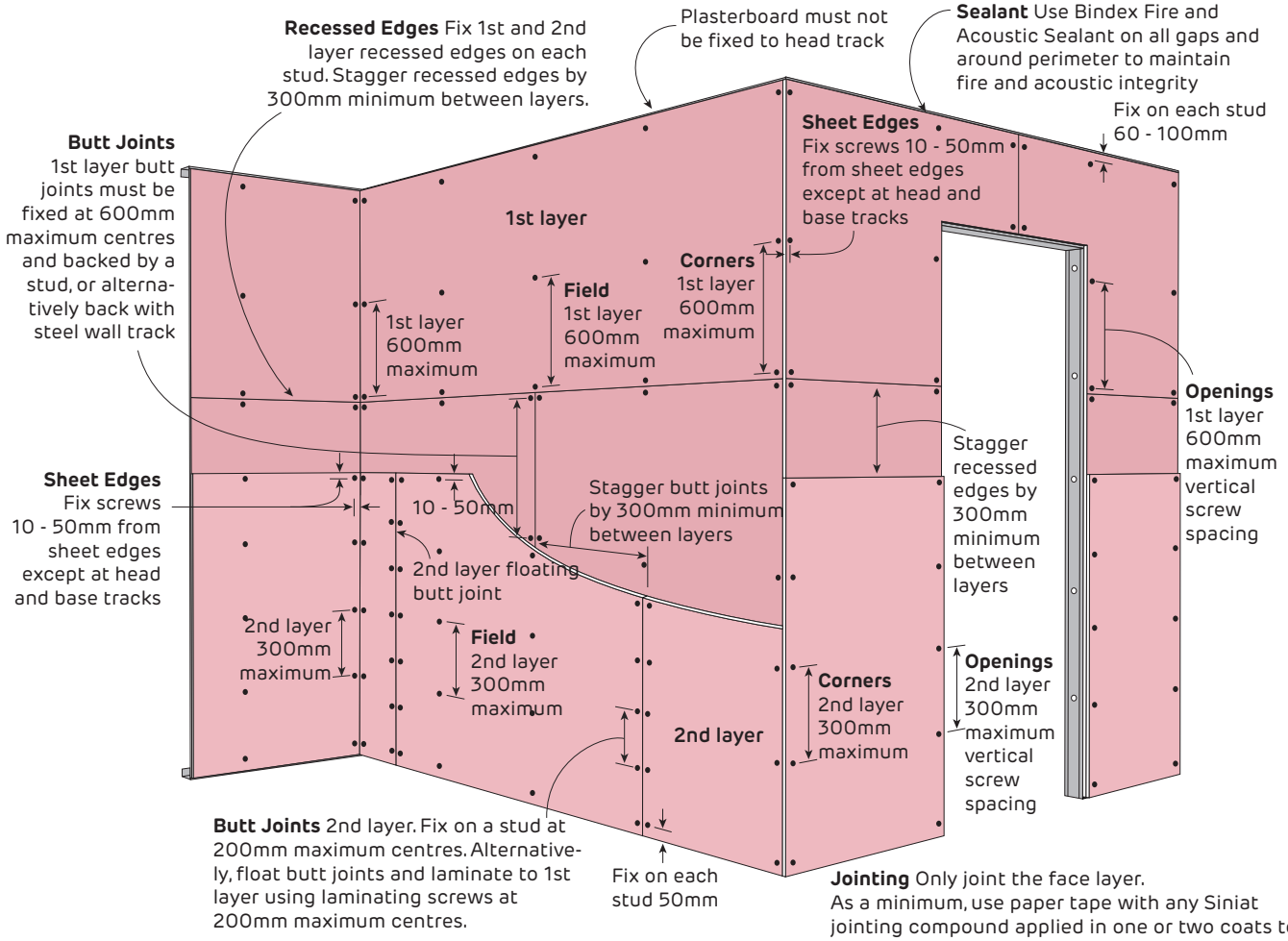

Fixing Pattern Table

Sheet Width	Fixing Pattern
600mm	S S S (3)
900mm	S S S S (4)
1200mm	S S S S S (5)
1350mm	S S S S S S (6)
1400mm	S S S S S S (6)

S = Screw

Maximum Ultimate Limit State Wind Load Table (kPa)

Plasterboard Thickness	Maximum Wall Stud Spacing			
	600mm	450mm	400mm	300mm
13mm	0.85	1.15	1.30	1.70
16mm	0.85	1.15	1.30	1.70

1. Calculations do not include the framing which must be independently designed to suit the desired loads.
2. If higher internal wind pressures are expected, please contact Siniat for specific design.

FIGURE 9 Shaft Wall Fire Rated 1 Layer - Vertical
Screw Only Method

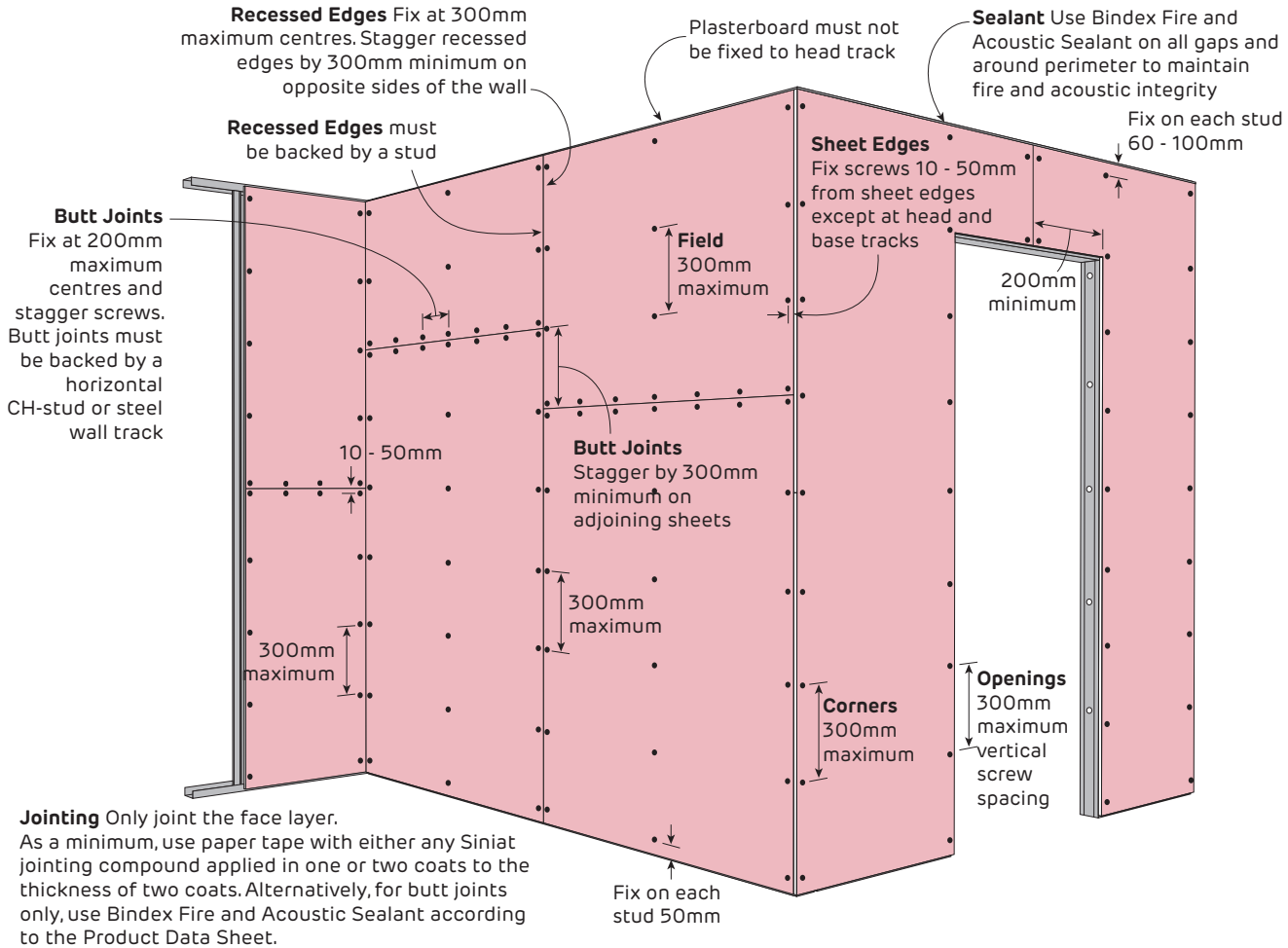

Maximum Ultimate Limit State Wind Load Table (kPa)

Plasterboard Thickness	Maximum Wall Stud Spacing			
	600mm	450mm	400mm	300mm
13mm	0.85	1.15	1.30	1.70
16mm	0.85	1.15	1.30	1.70

1. Calculations do not include the framing which must be independently designed to suit the desired loads.
2. If higher internal wind pressures are expected, please contact Siniat for specific design.

FIGURE 10 Shaft Wall Fire Rated 2 Layers - Vertical + Vertical
Screw Only Method

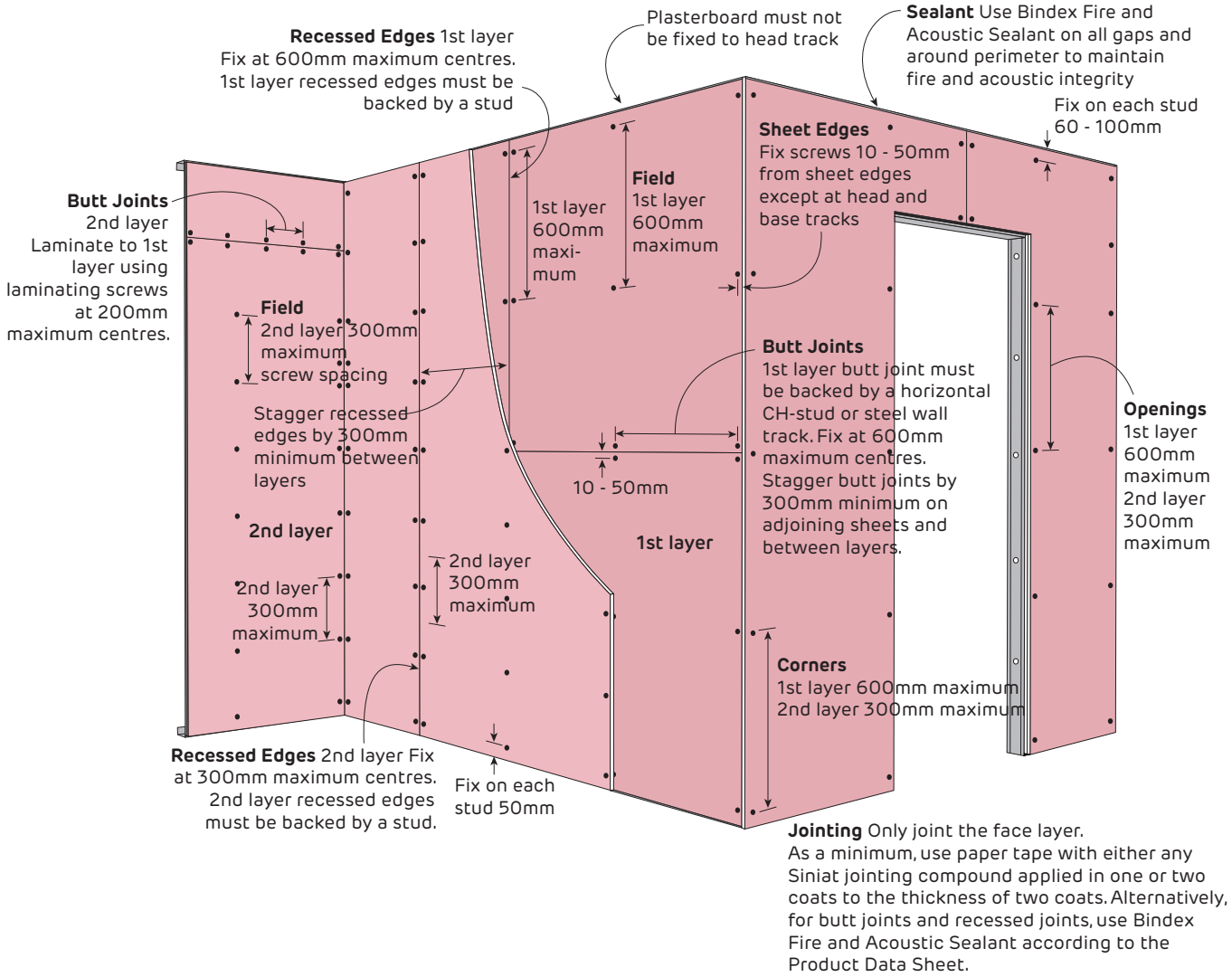

Jointing Only joint the face layer. As a minimum, use paper tape with either any Siniat jointing compound applied in one or two coats to the thickness of two coats. Alternatively, for butt joints and recessed joints, use Bindex Fire and Acoustic Sealant according to the Product Data Sheet.

Maximum Ultimate Limit State Wind Load Table (kPa)

Plasterboard Thickness	Maximum Wall Stud Spacing			
	600mm	450mm	400mm	300mm
13mm	0.85	1.15	1.30	1.70
16mm	0.85	1.15	1.30	1.70

1. Calculations do not include the framing which must be independently designed to suit the desired loads.
2. If higher internal wind pressures are expected, please contact Siniat for specific design.

Fire Rated
Shaft Wall Head and Base Details

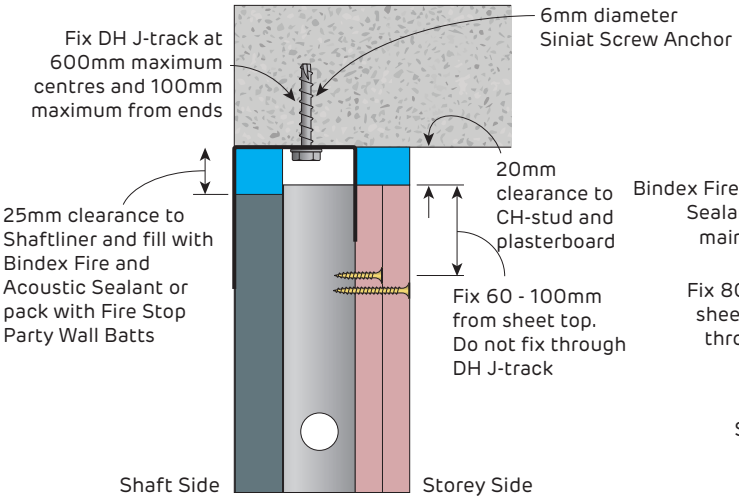

FIGURE 11 Shaft Wall Deflection Head
Max 20mm deflection allowance
System SHW2 - Section

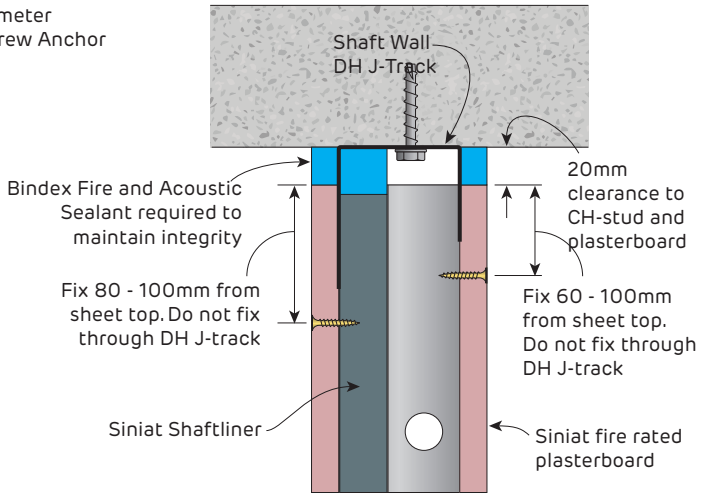

FIGURE 12 Shaft Wall Deflection Head
Max 20mm deflection allowance
System SHW1 and SHW3 - Section

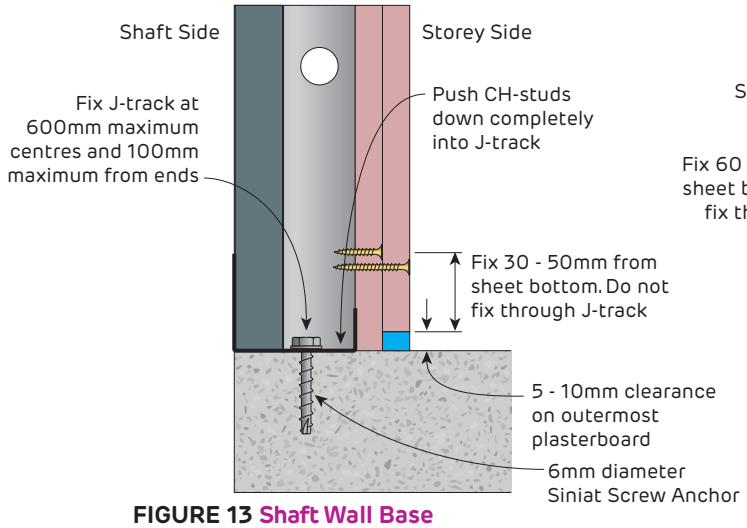

FIGURE 13 Shaft Wall Base
System SHW2
Section

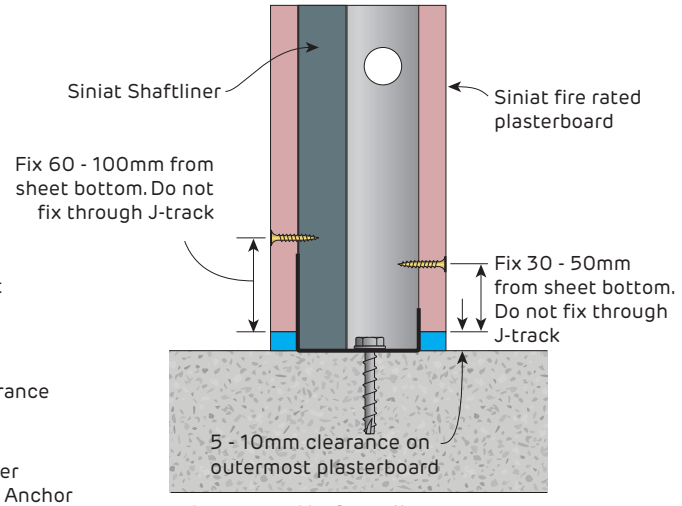

FIGURE 14 Shaft Wall Base
System SHW1 and SHW3
Section

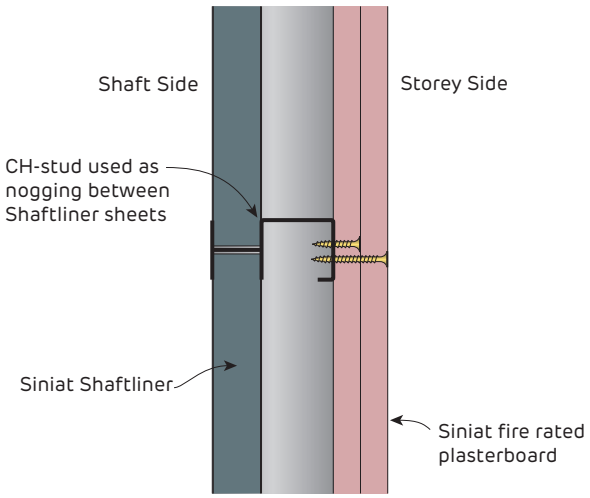

FIGURE 15 Butt Joint in Shaftliner
Section

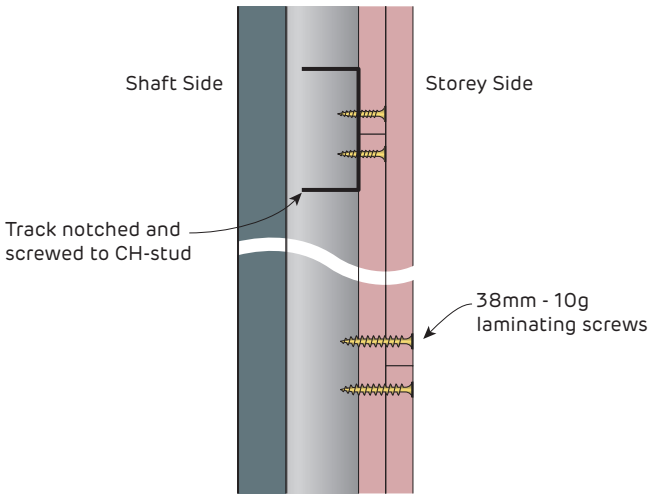

FIGURE 16 Butt Joint in Fire Rated Plasterboard
Section

Fire Rated
Shaft Wall Details

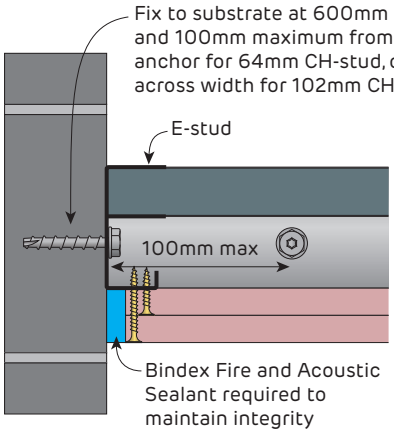

FIGURE 17 Shaft Wall Start
E-stud
Plan

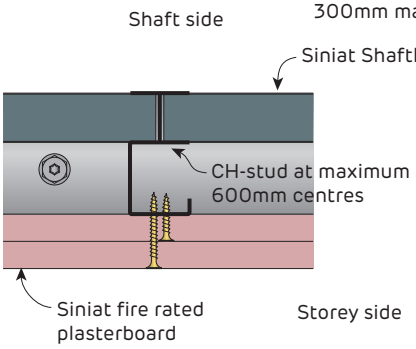

FIGURE 18 Shaft Wall Middle
CH-stud
Plan

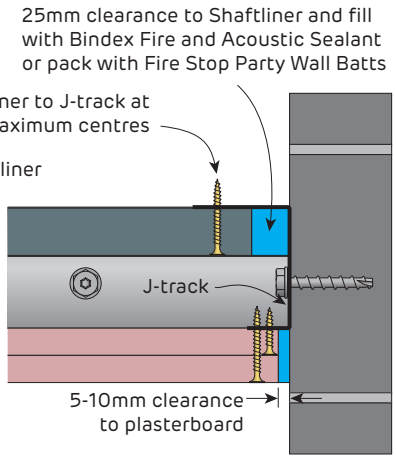

FIGURE 19 Shaft Wall End
J-track
Plan

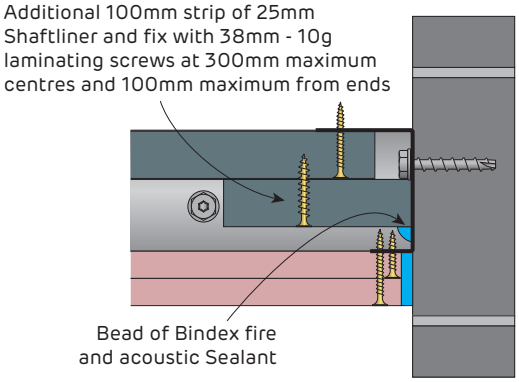

FIGURE 20 Alternative Shaft Wall End
J-track
Plan

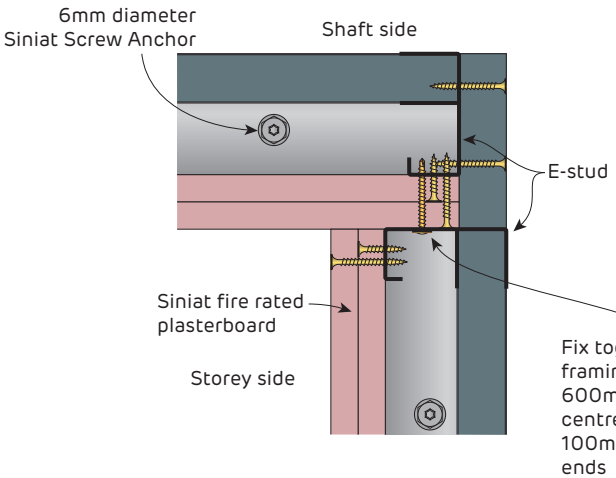

FIGURE 21 Shaft Wall Internal Corner
Plan

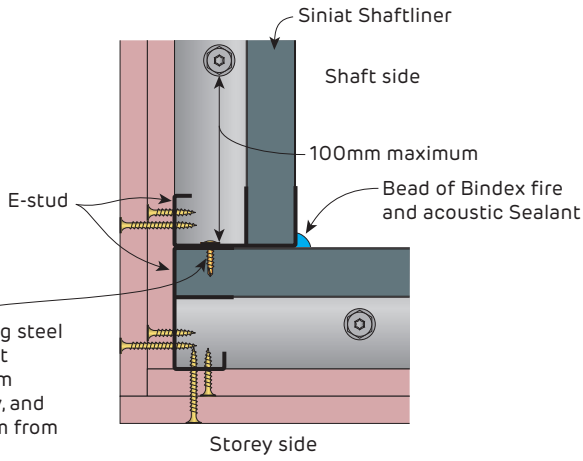

FIGURE 22 Shaft Wall External Corner
Plan

Fire Rated
Shaft Wall Details

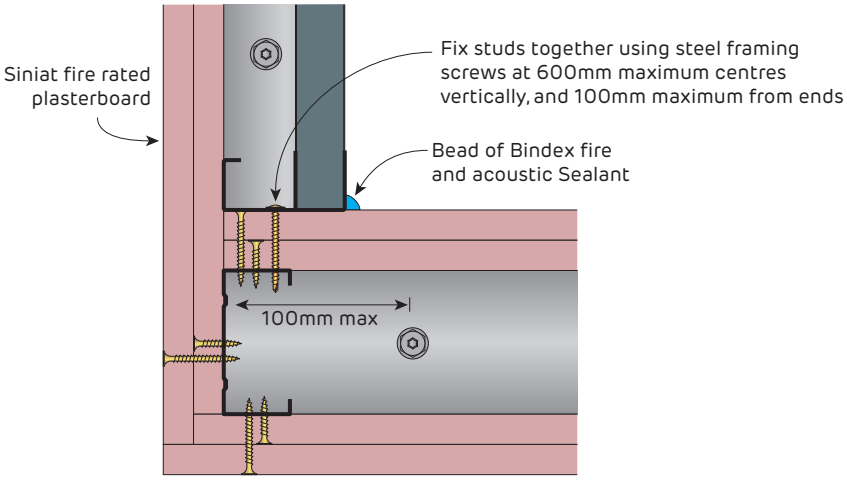

FIGURE 23 Shaft Wall to Internal Partition Corner
Plan

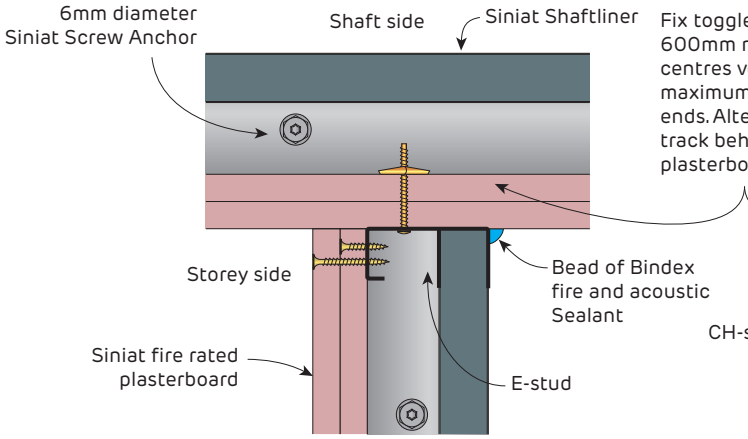

FIGURE 24 Shaft Wall Intersecting Wall
Plan

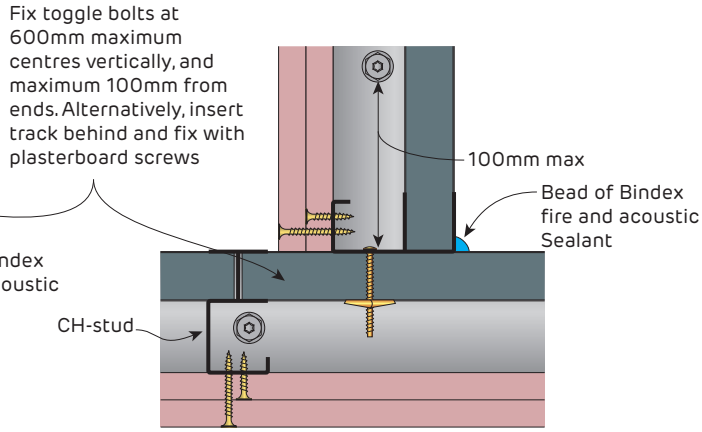

FIGURE 25 Shaft Wall Intersecting Wall
Plan

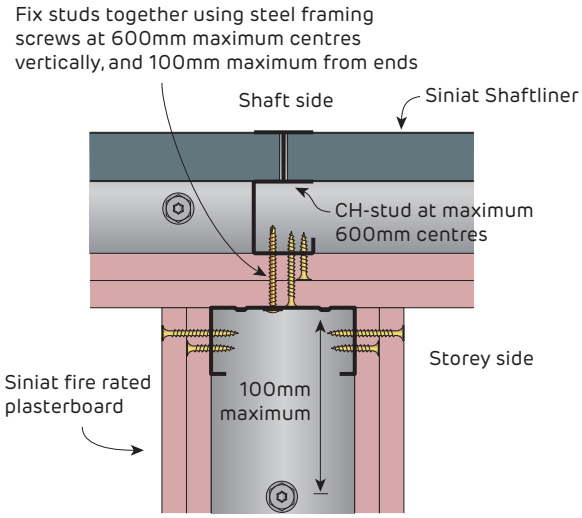

FIGURE 26 Shaft Wall to Partition Intersecting Wall
Plan

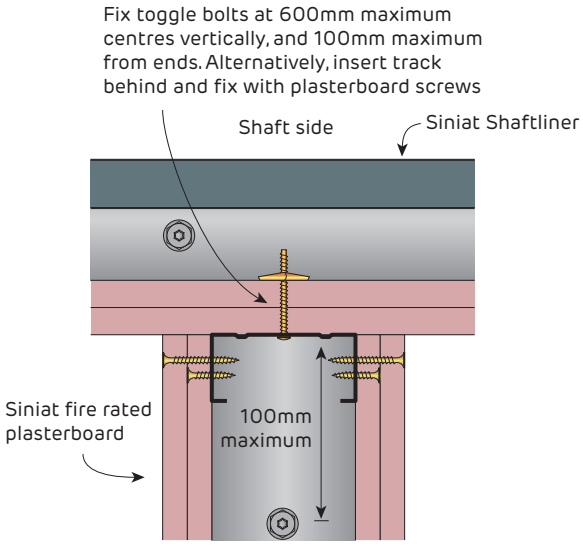

FIGURE 27 Shaft Wall to Partition Intersecting Wall
Plan

Fire Rated
Shaft Wall Details

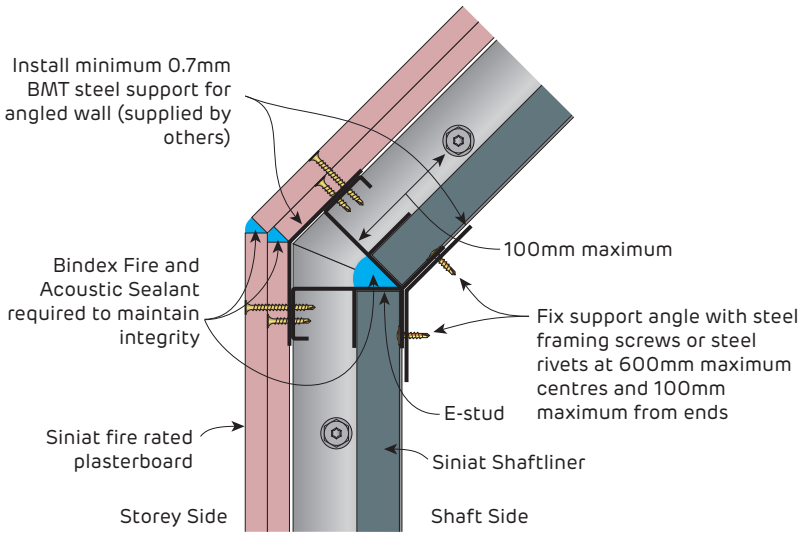

FIGURE 28 Shaft Wall Obtuse Angle
Plan

Fire Rated
Shaft Wall Details for Access Panel and Fire Damper

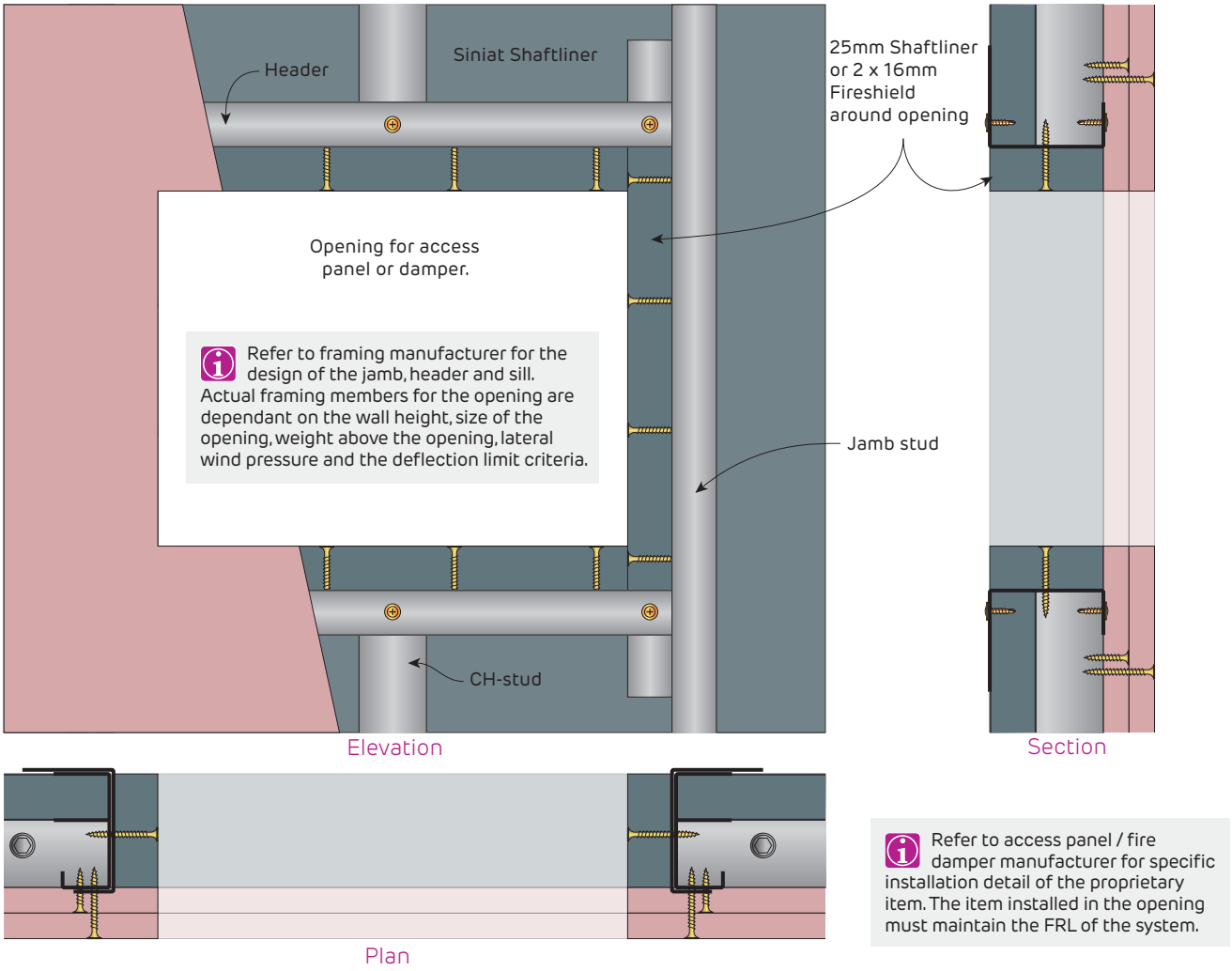

FIGURE 29 Typical Opening Detail For Fire Damper or Access Panel
Fire rated from both directions but built from one side only

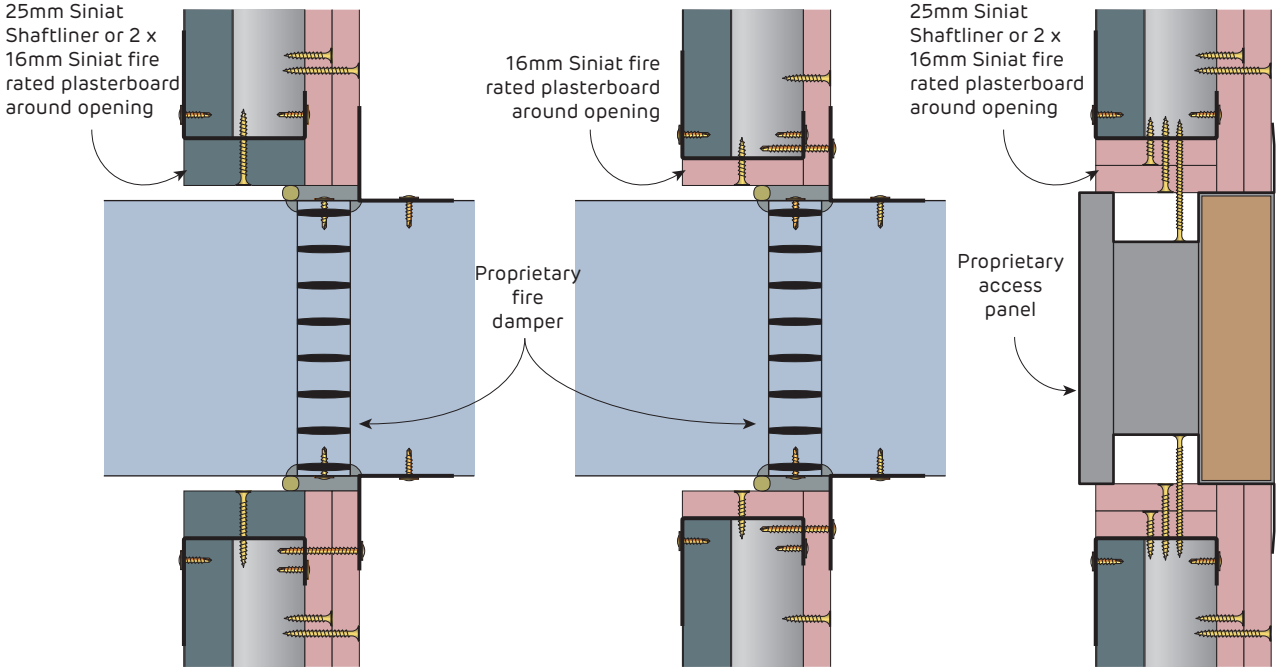

FIGURE 30 Fire Damper Example Detail
Section

FIGURE 31 Fire Damper Example Detail
Section

FIGURE 32 Access Panel Example Detail
Section



CONSTRUCTION DETAILS 338

3.8 Security Walls

Security wall is an upgrade solution to improve security for any wall system. Applications for security wall can include common walls in multi-residential apartments and hotels, partitioning in shopping centres and retail outlets such as pharmacies.

The system uses a sheet metal or expanded mesh barrier that is installed as part of the framing construction. The construction is cost-effective as it allows simple and quick assembly. The security wall upgrade may be applied to any Siniat single, staggered or double stud wall system without reducing fire and acoustic performance.

Fire Rated and Non-Fire Rated
Details for Security Walls

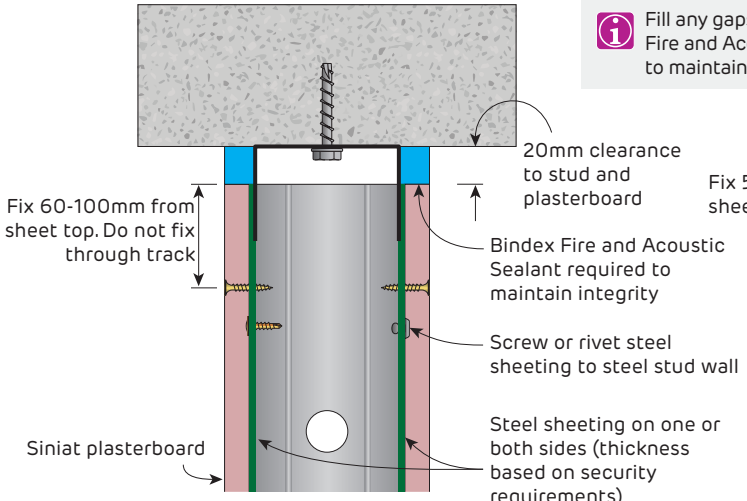

FIGURE 1 Wall Head
Steel sheeting between stud and plasterboard
Section

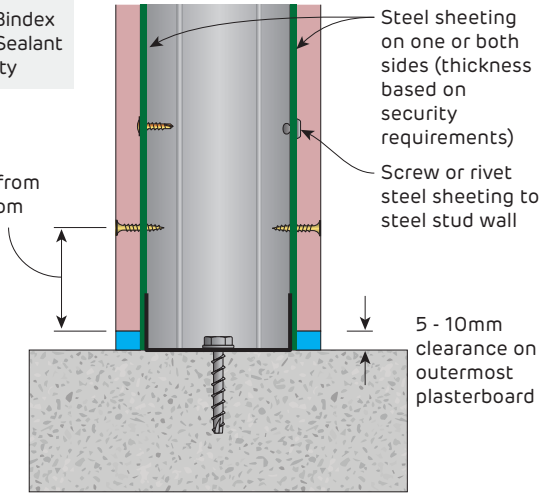

FIGURE 2 Wall Base
Steel sheeting between stud and plasterboard
Section

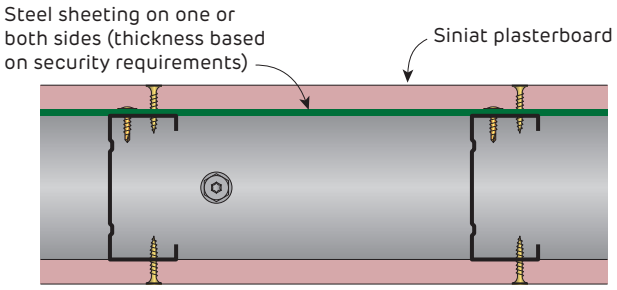

FIGURE 3 Single Stud Wall
1 layer of steel sheeting
Plan

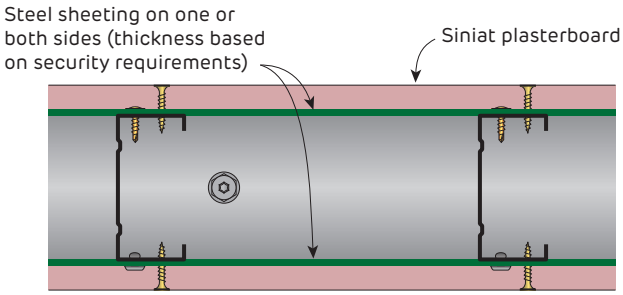

FIGURE 4 Single Stud Wall
2 layers of steel sheeting
Plan

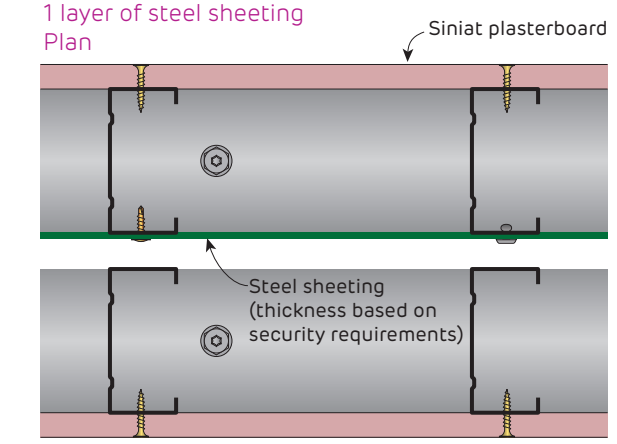

FIGURE 5 Double Stud Wall
1 layer of steel sheeting between stud framing
Plan

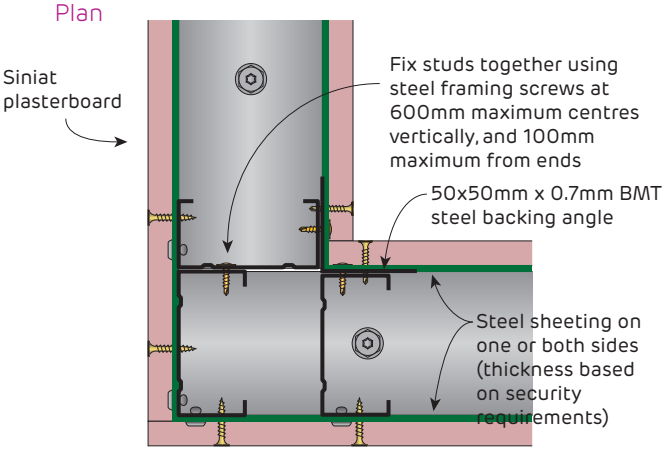

FIGURE 6 90° Corner
2 layers of steel sheeting
Plan

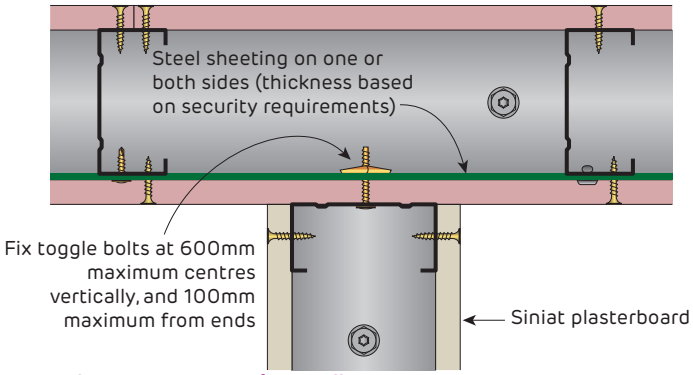

FIGURE 7 Intersecting Wall
1 layer of steel sheeting
Plan

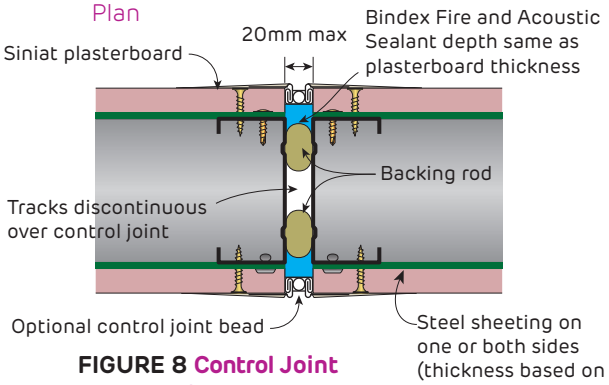

FIGURE 8 Control Joint
2 layers of steel sheeting
Plan



3.9 Timber Separating Wall Details

Timber double stud walls are commonly used as load bearing separating walls for Class 1 dwellings and Class 2 multi-residential buildings, providing fire safety and acoustic separation between sole occupancy units.

This section only contains construction details only for load bearing separating walls. For Wall Systems refer to Section 3.3 and for Ceiling Systems refer to Section 5.1.

For load bearing Class 1 applications also consider Siniat InterHome system, and for non-load bearing Class 2 separating wall systems consider Siniat InterHome High-Rise walls in Section 3.6.

Fire Rated
Separating Wall

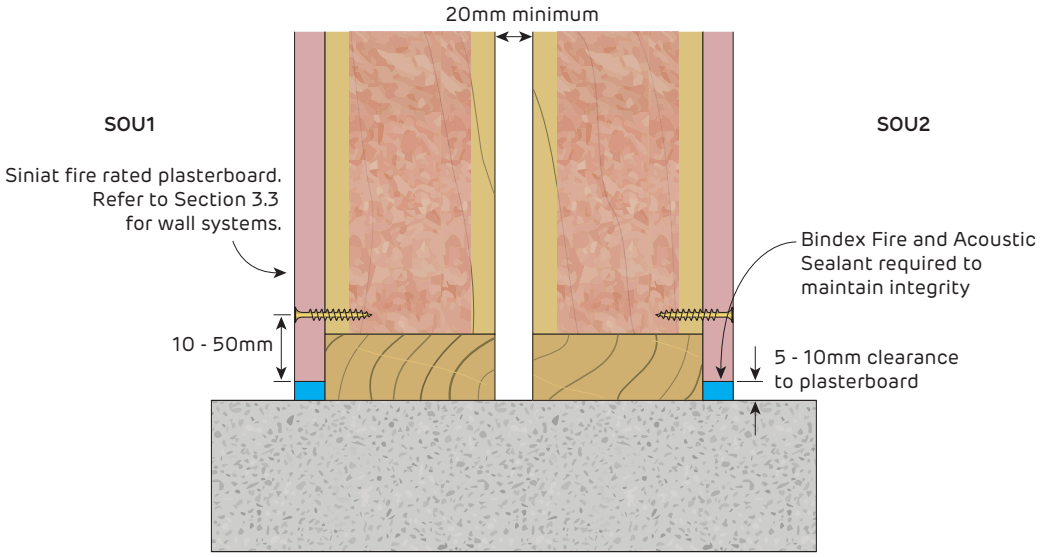

FIGURE 1 Separating Wall Base to Slab
Section

Fill any gaps with Bindex Fire and Acoustic Sealant to maintain integrity

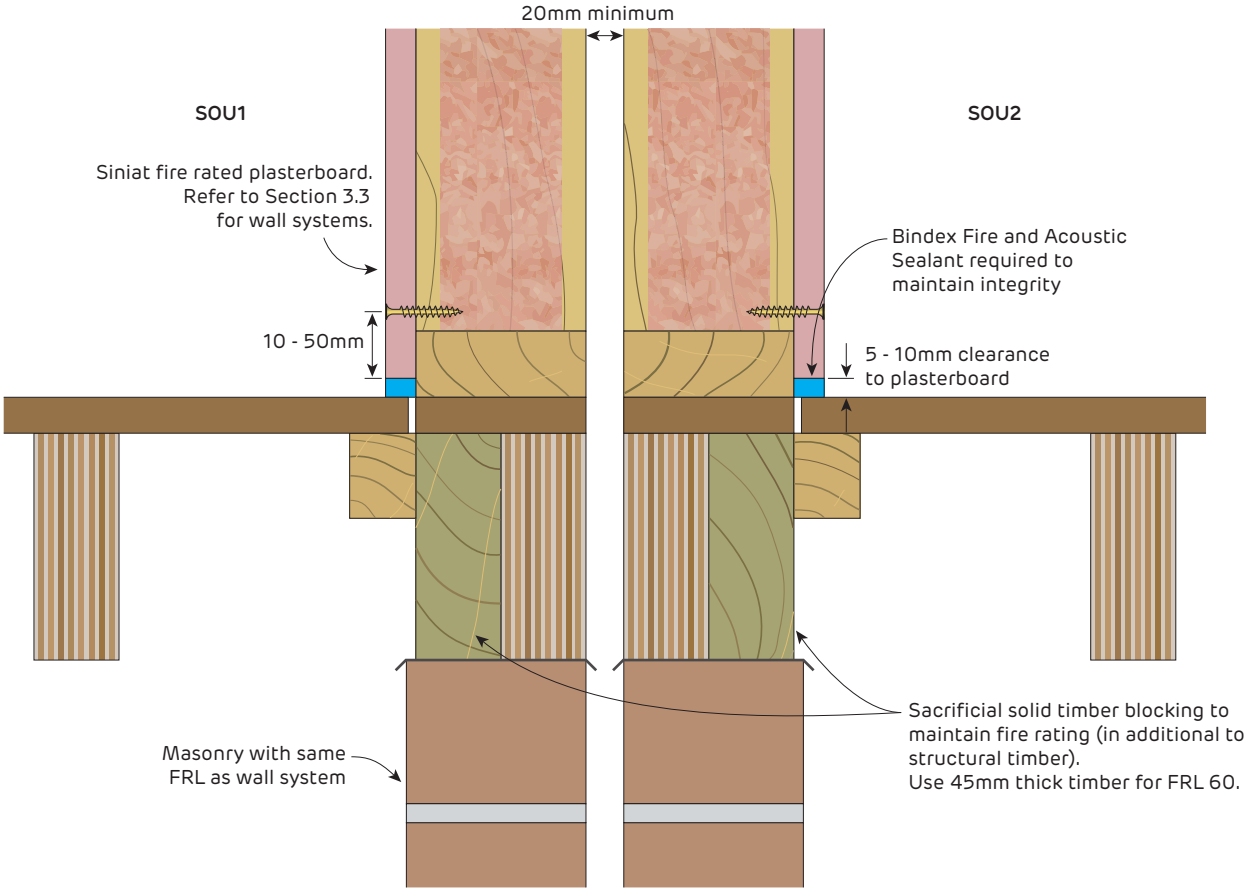

FIGURE 2 Separating Wall with Suspended Ground Floor
Section

Fire Rated
Separating Wall FRL with Suspended Floor inside SOU

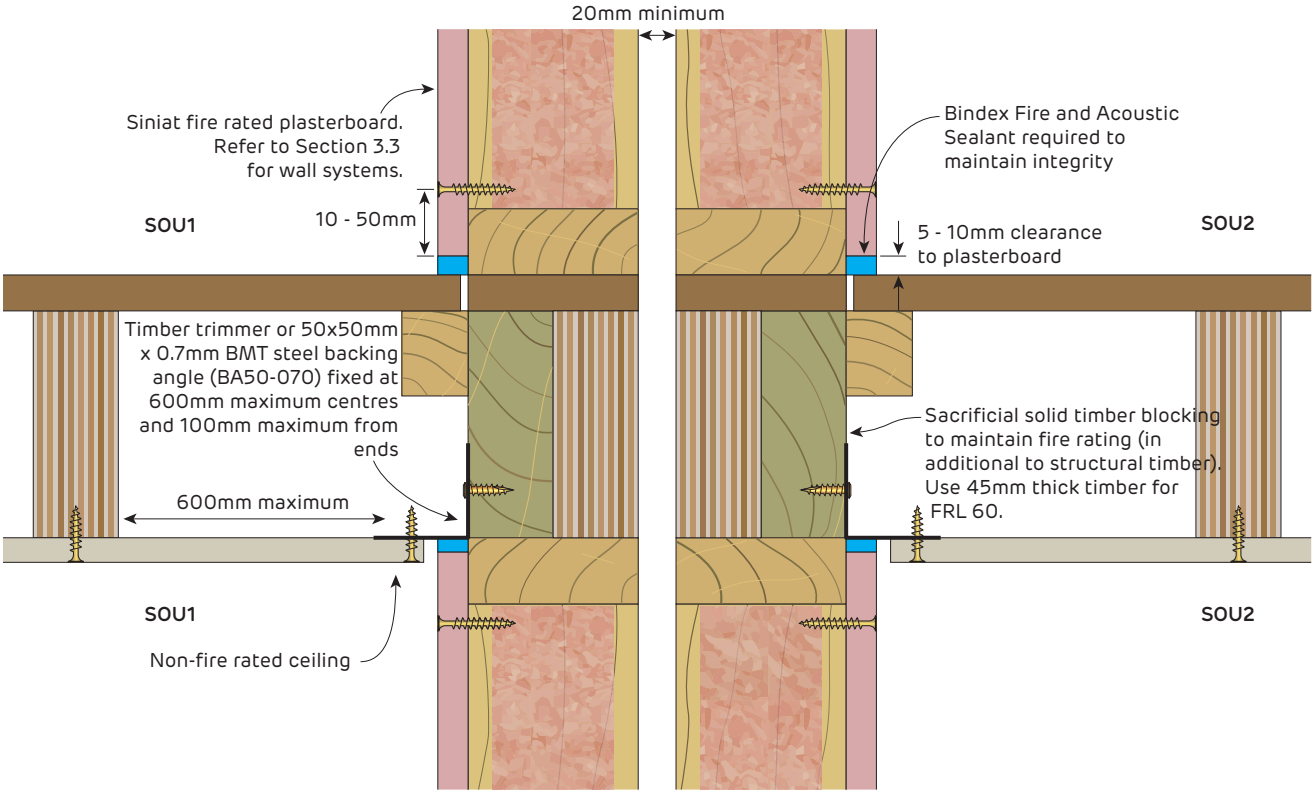

FIGURE 3 Separating Wall with Suspended Floor
Section

Fill any gaps with Bindex Fire and Acoustic Sealant to maintain integrity

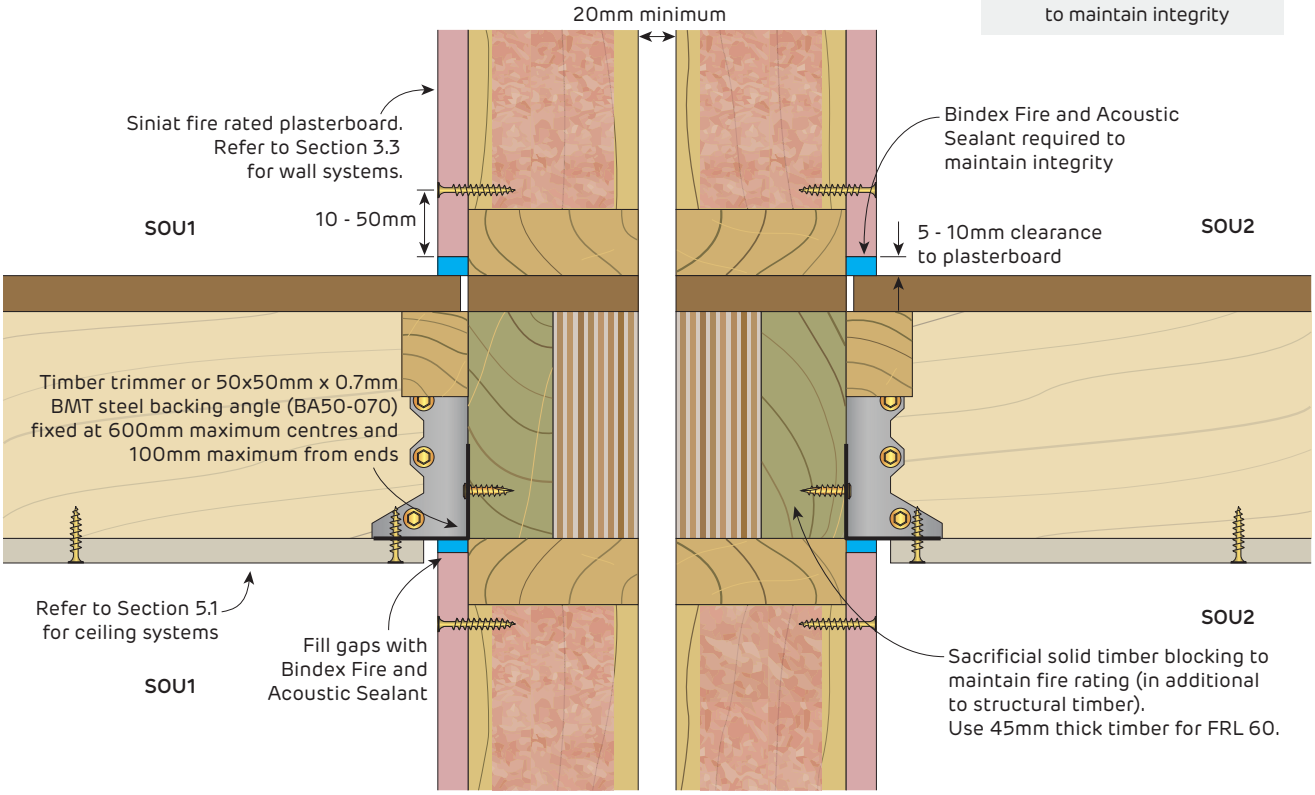

FIGURE 4 Separating Wall with Suspended Floor
Floor joists on framing brackets
Section

Fire Rated
Separating Wall FRL with Suspended Floor inside SOU

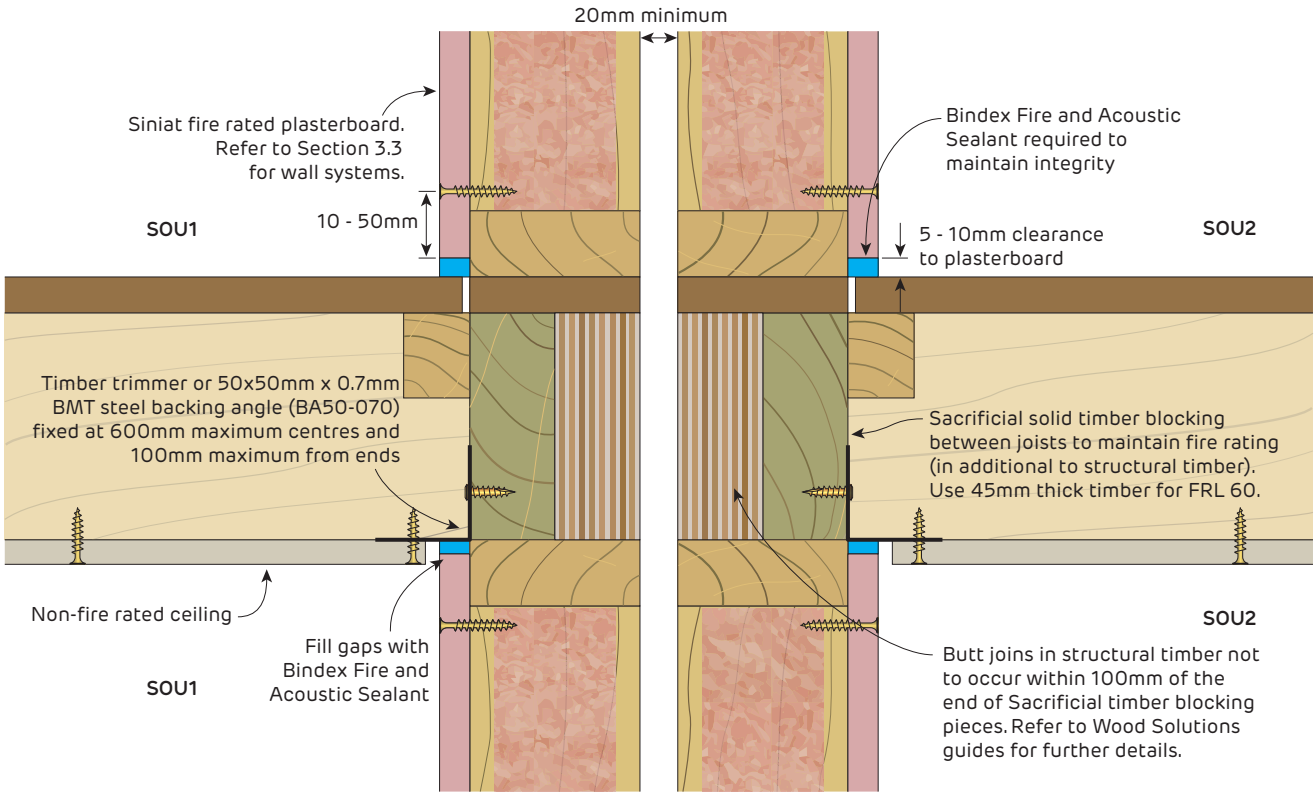

FIGURE 5A Separating Wall with Suspended Floor
Floor joists seated on wall plates
Section

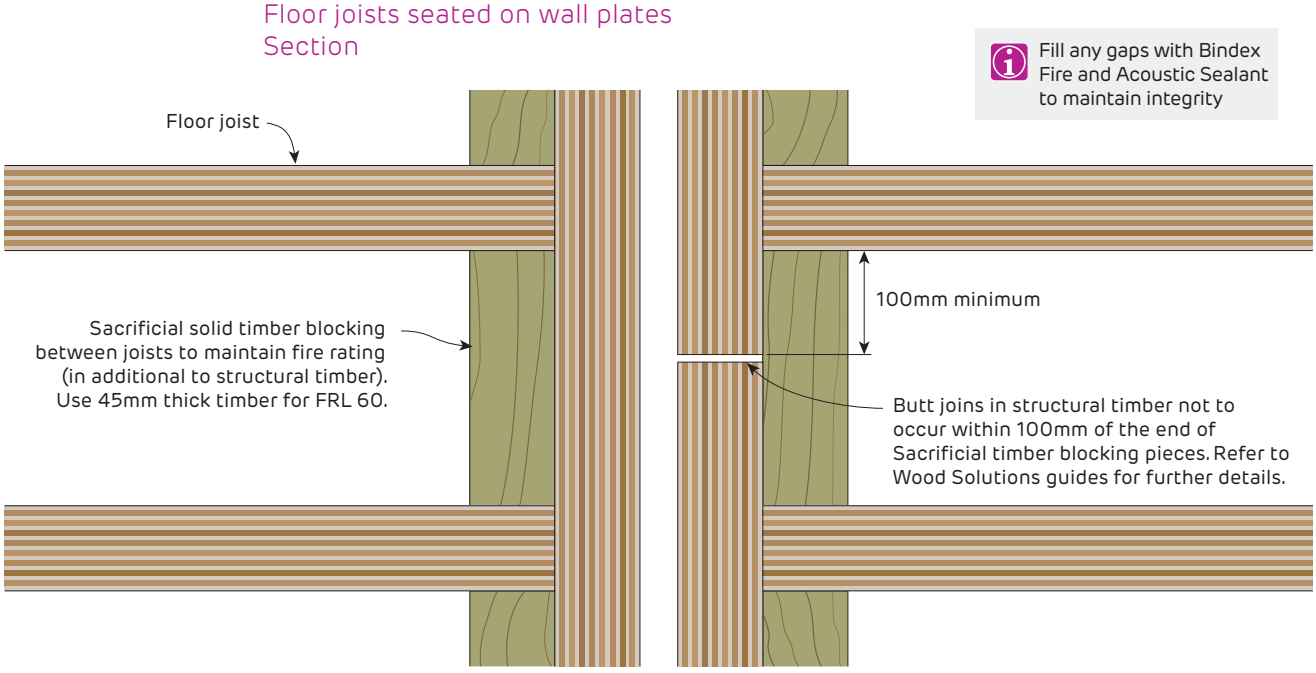

FIGURE 5B Separating Wall with Suspended Floor
Plan

Fire Rated
Separating Wall FRL with Suspended Floor Details

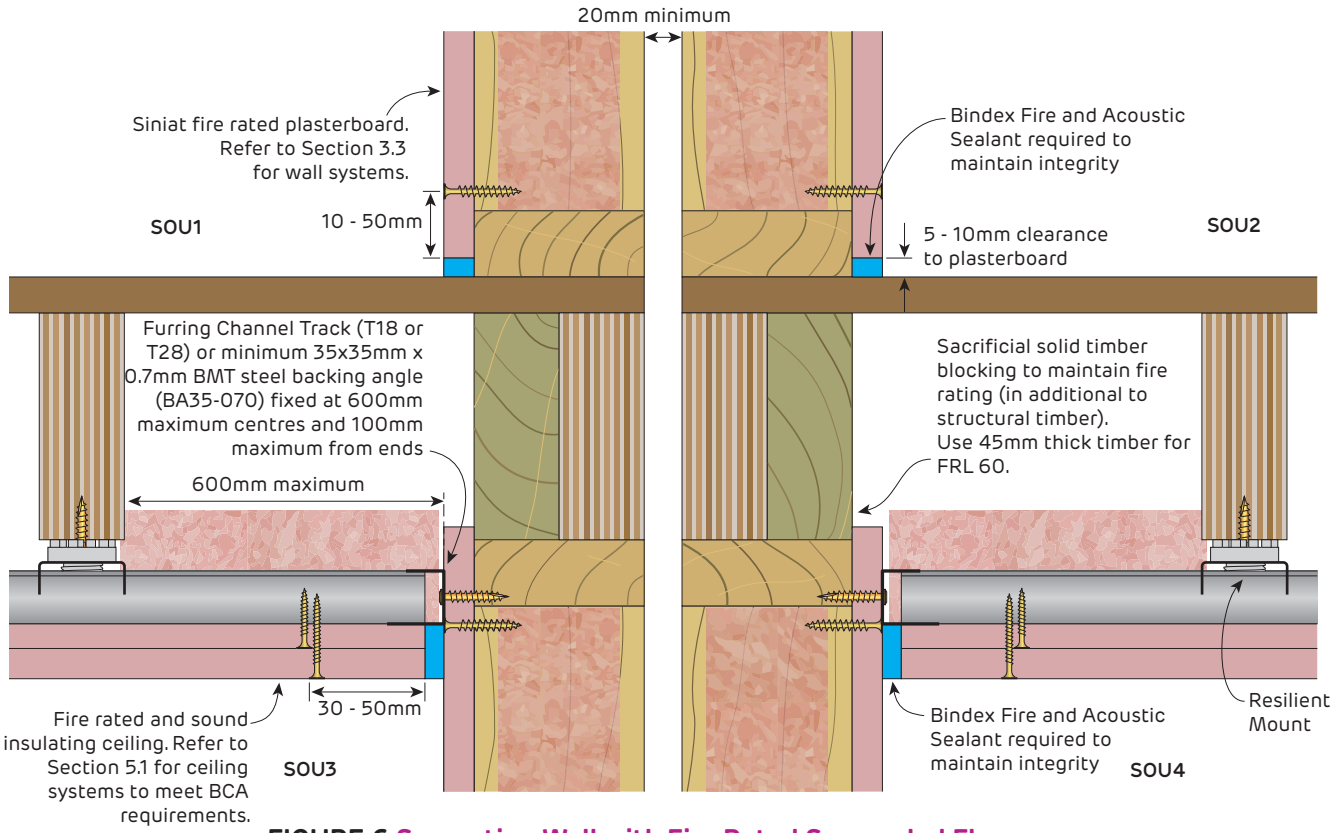

FIGURE 6 Separating Wall with Fire Rated Suspended Floor
Section

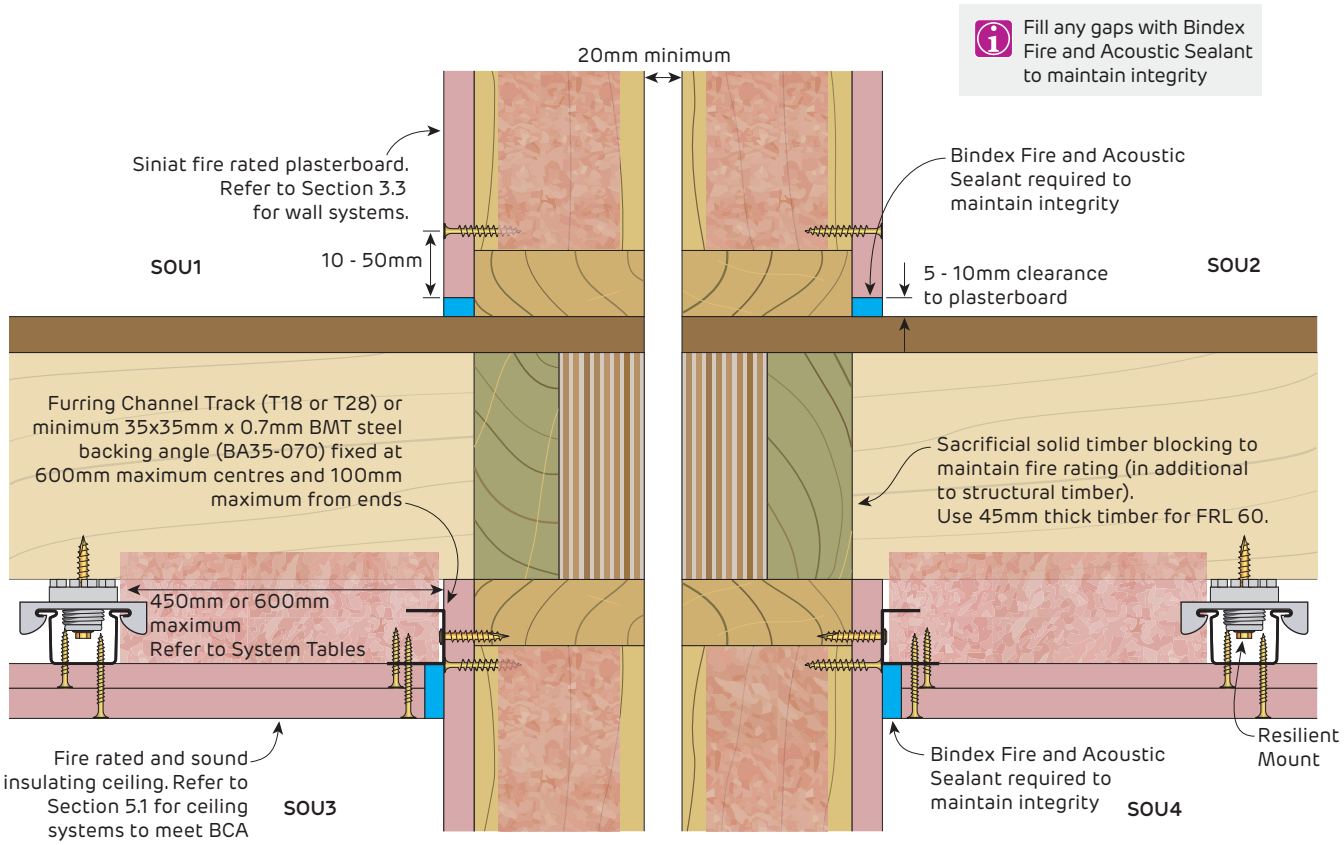

FIGURE 7 Separating Wall with Fire Rated Suspended Floor
Section

Fire Rated
Separating Wall FRL

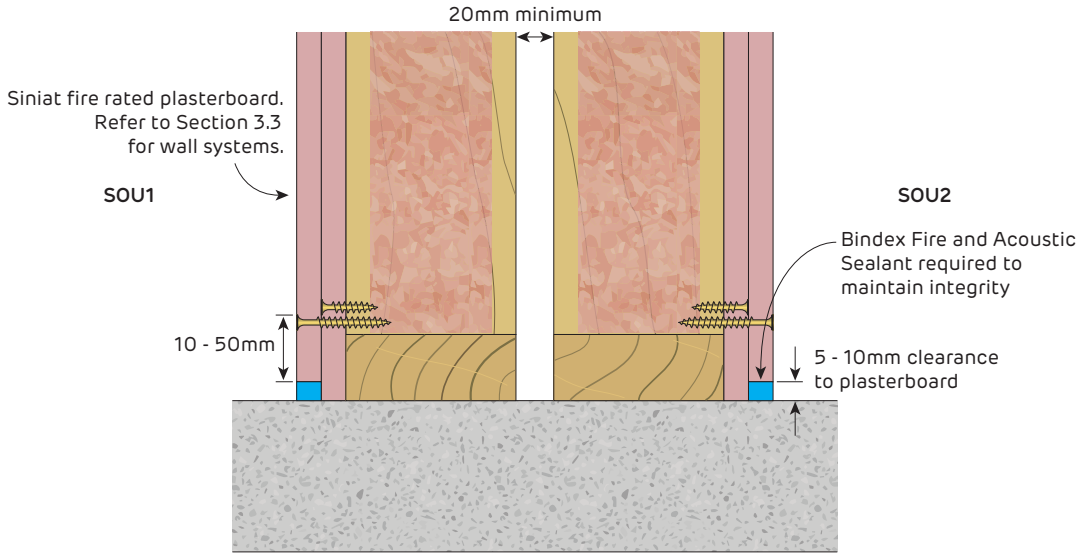

FIGURE 8 Separating Wall Base to Slab
Section

Separating Wall FRL with Suspended Floor

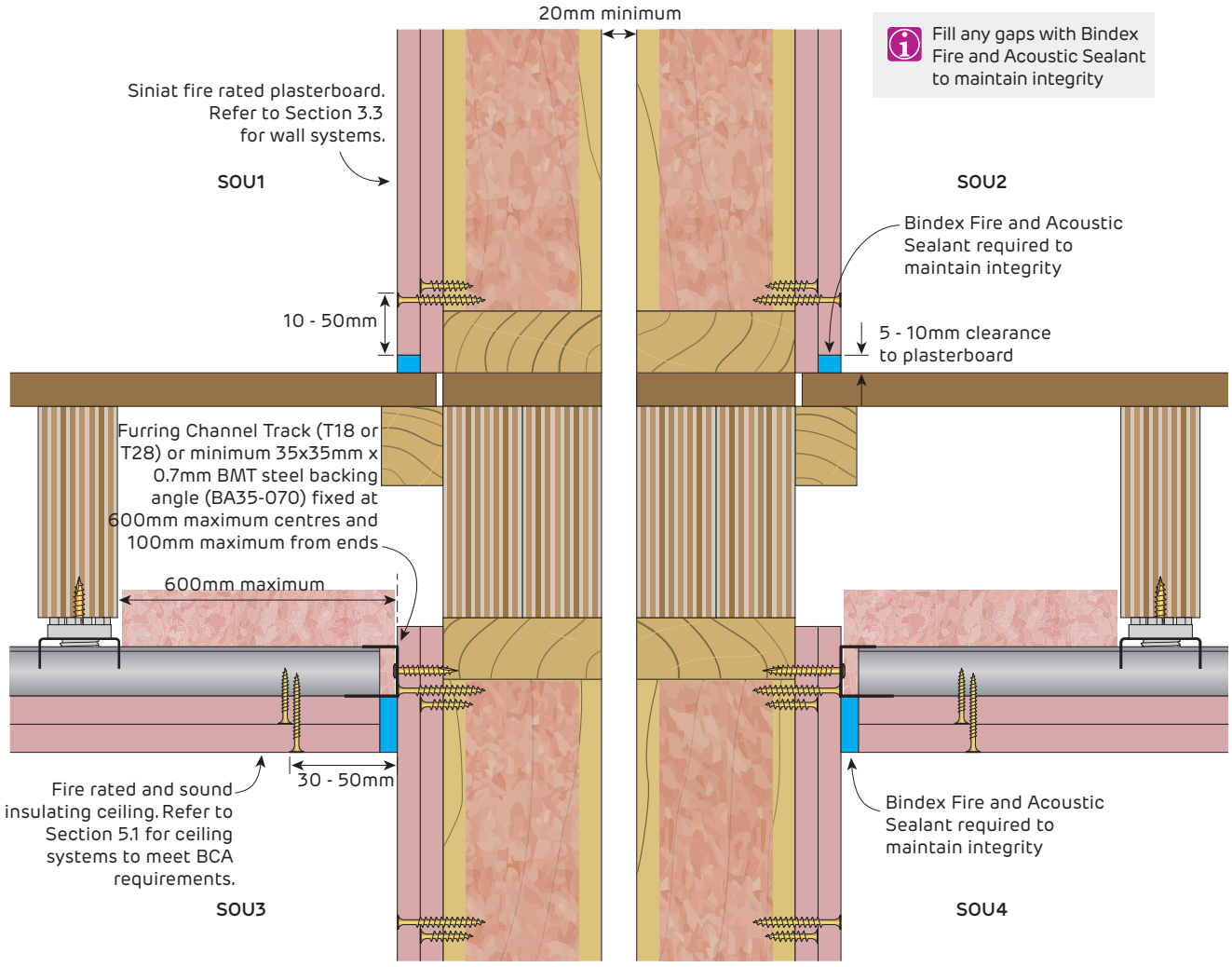

FIGURE 9 Separating Wall with Fire Rated Suspended Floor
Section

Fire Rated
Separating Wall to Non-Combustible Roof Lining

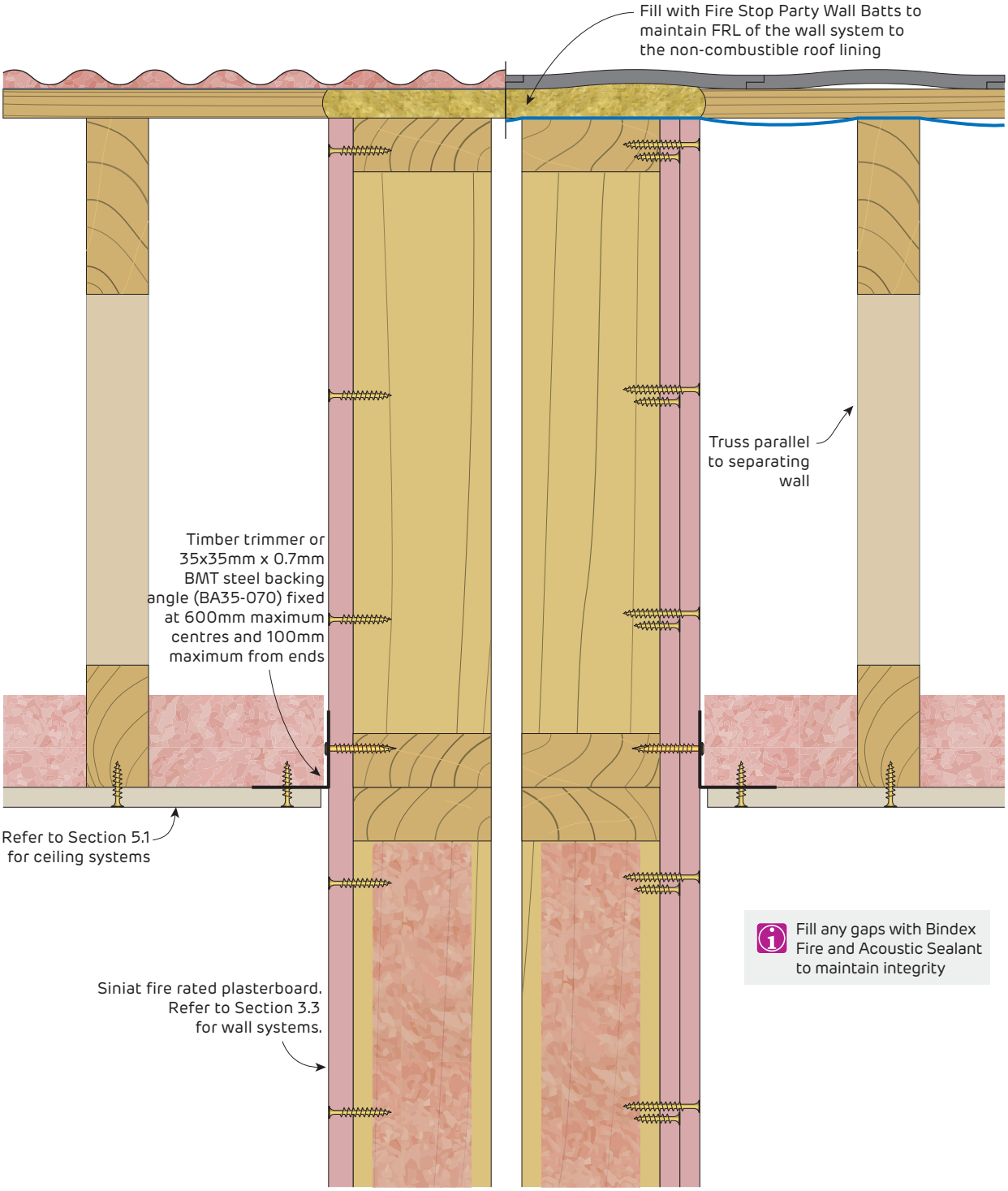

FIGURE 10 Separating Wall to Non-combustible Roof Lining
Section

Fire Rated
Separating Wall to Ceiling with RISF of 60 minutes

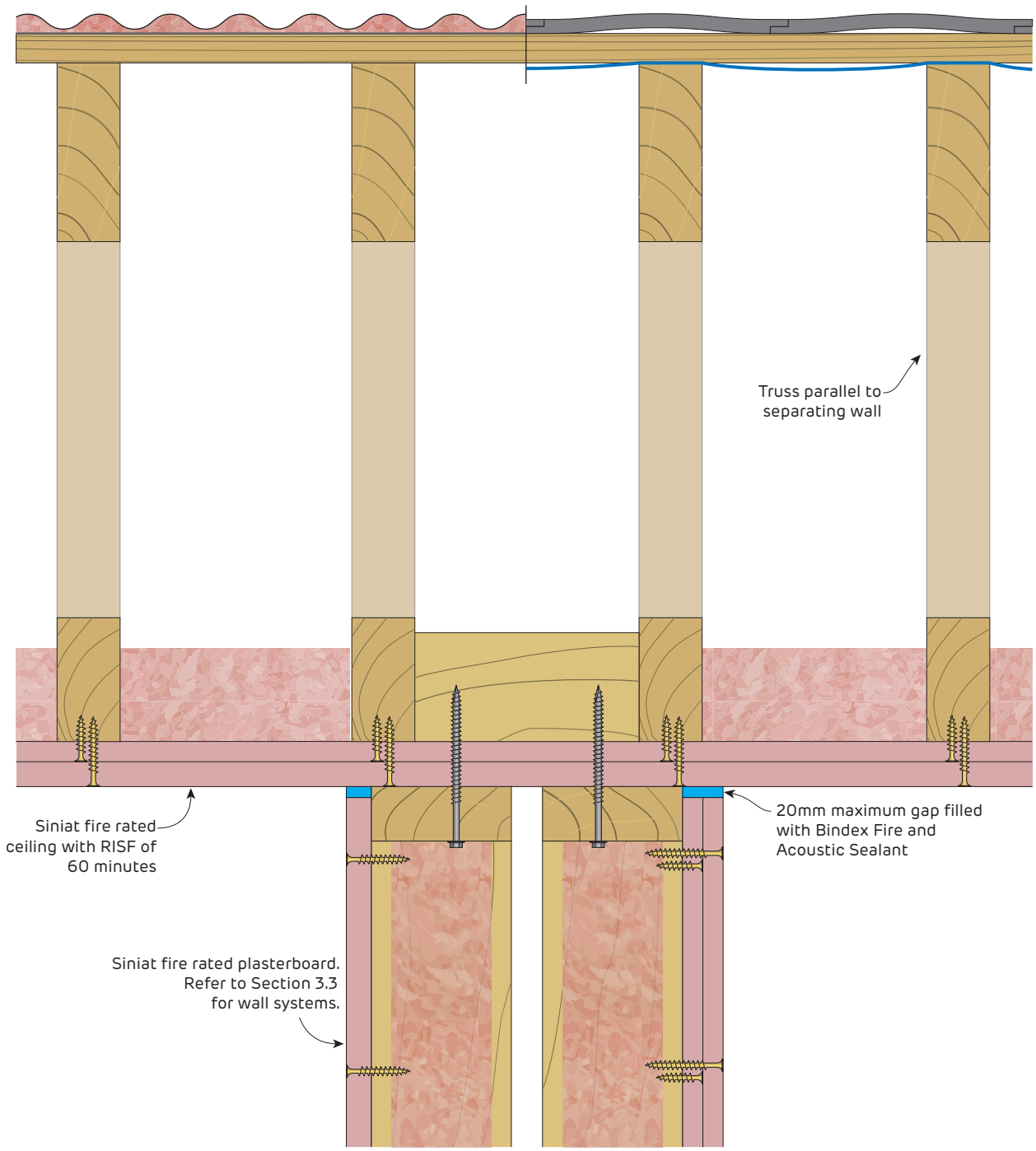

FIGURE 11 Separating Wall to Siniat Fire Rated Ceiling
Section

Fire Rated
Separating Wall to External Wall Above

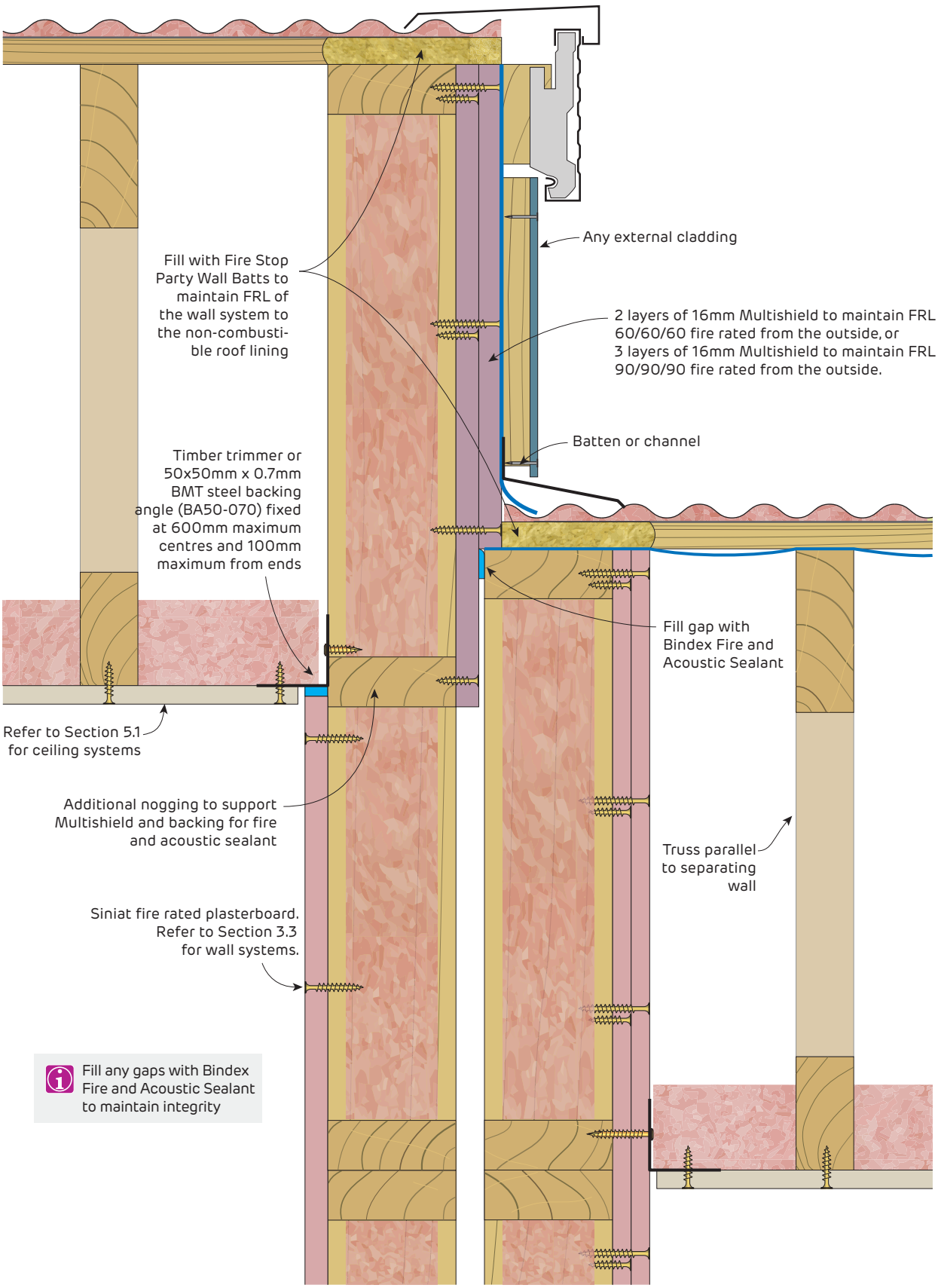

FIGURE 12 Separating Wall with External Wall Above
Section

Fire Rated
Separating Wall over Eaves

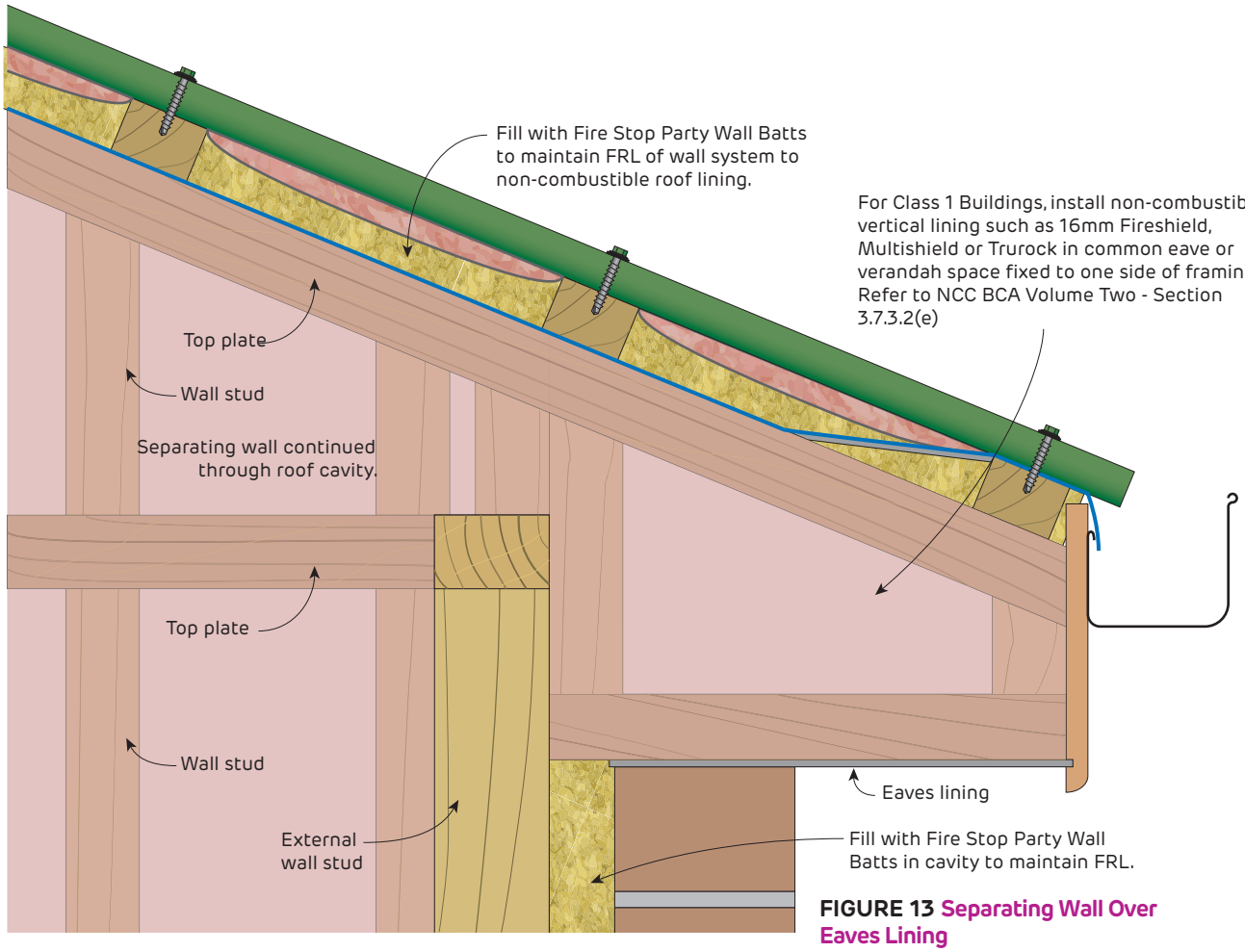

FIGURE 13 Separating Wall Over Eaves Lining
Section

Non-Fire Rated Intersecting Walls

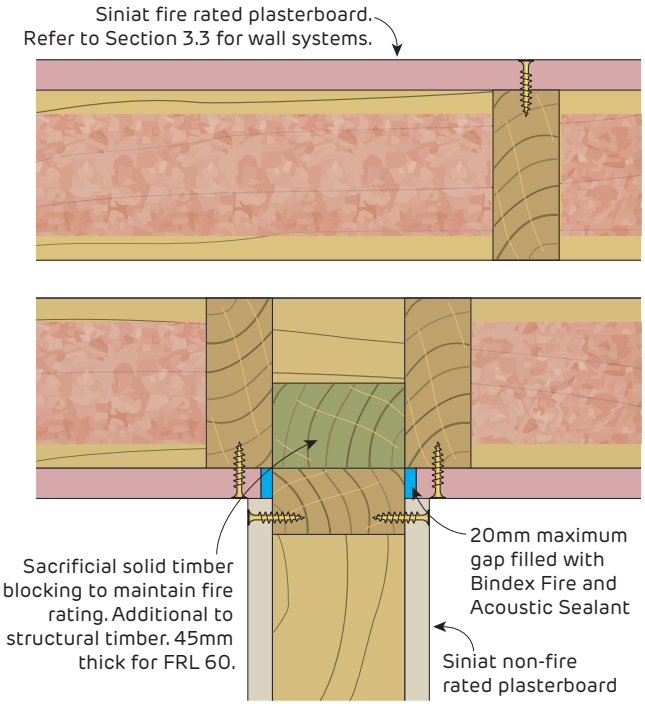

FIGURE 14 Separating Wall with Non-Fire Rated Intersecting Wall
Plan

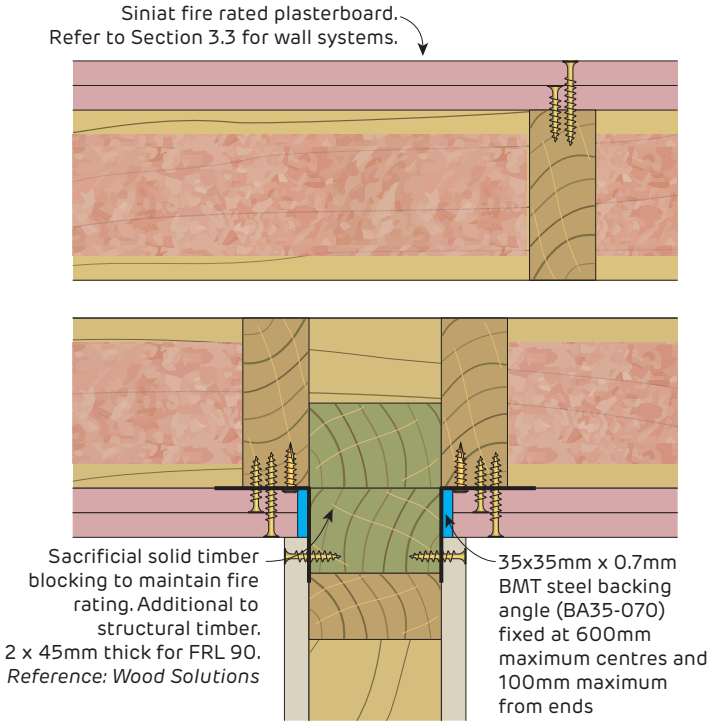

FIGURE 15 Separating Wall with Non-Fire Rated Intersecting Wall
Plan

Fire Rated
Separating Wall to External Wall

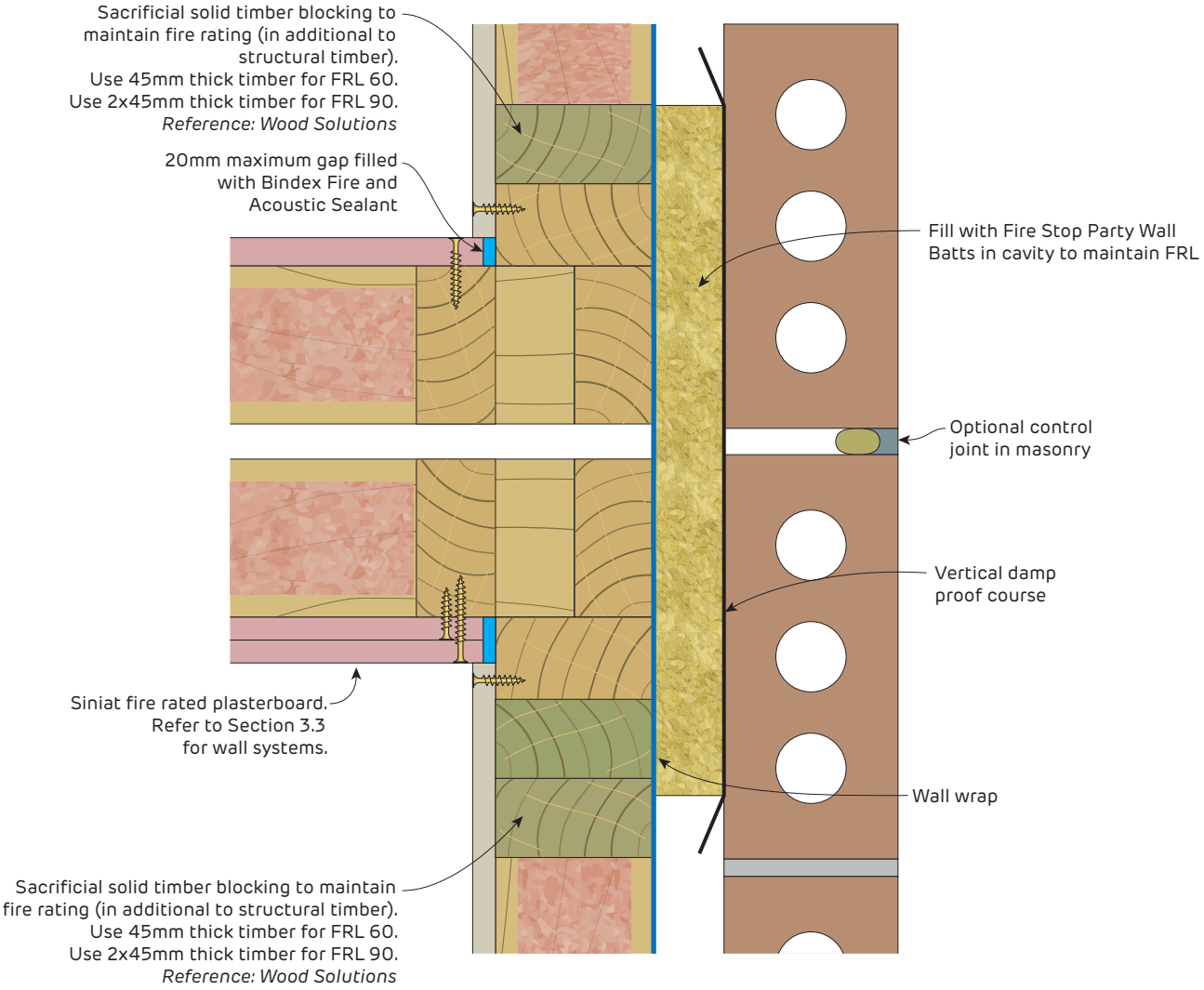

FIGURE 16 Separating Wall to External Brick Wall
Plan

Fire Rated
Separating Wall to External Wall

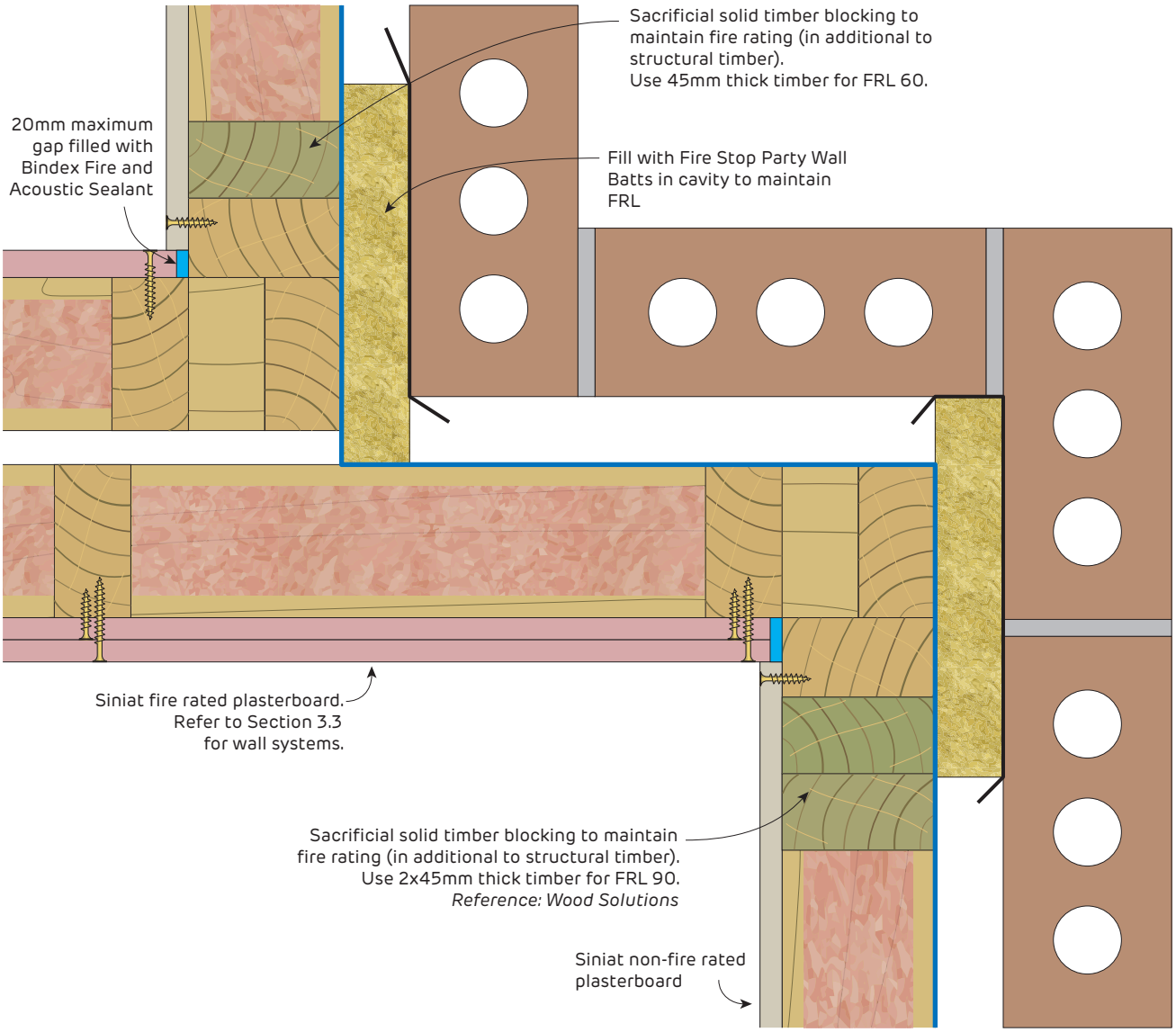

FIGURE 17 Separating Wall to External Brick Wall
Plan



CONSTRUCTION DETAILS 352

3.10 Portal Frame Construction Details

Fire rated steel frame partition walls can be used to divide portal frame construction into separate fire compartments.

Under normal conditions these walls are non-load bearing but may bear the load of structural elements above the wall in the event of fire. As such a wall with a Structural Adequacy component to the Fire Resistance Level (FRL) should be used and additional structural columns may be required to support the intended loads under fire conditions. The NCC requires all structures to have Structural Reliability (Refer to BCA BP1.1(a)(iii)) whereby local damage such as a fire in one part of the building does not compromise the structural stability of the rest of the building. This indicates that a review of the buildings structural stability in the event of a fire must be completed.

As portal frames are complex structures, advice from fire engineers is recommended to assist with cost effective solutions for issues such as the transmission of heat through structural members crossing fire walls. In this case, a performance based solution is usually implemented.

This section contains details around structural steel beams and columns, as well as purlins and girts. Refer to Section 3.1 for Steel Framed Partitions Walls and Section 6.4 for Fire Encasement systems for protection of structural members.

Fire Rated
Wall Partition Around Steel Beam to Roof Lining

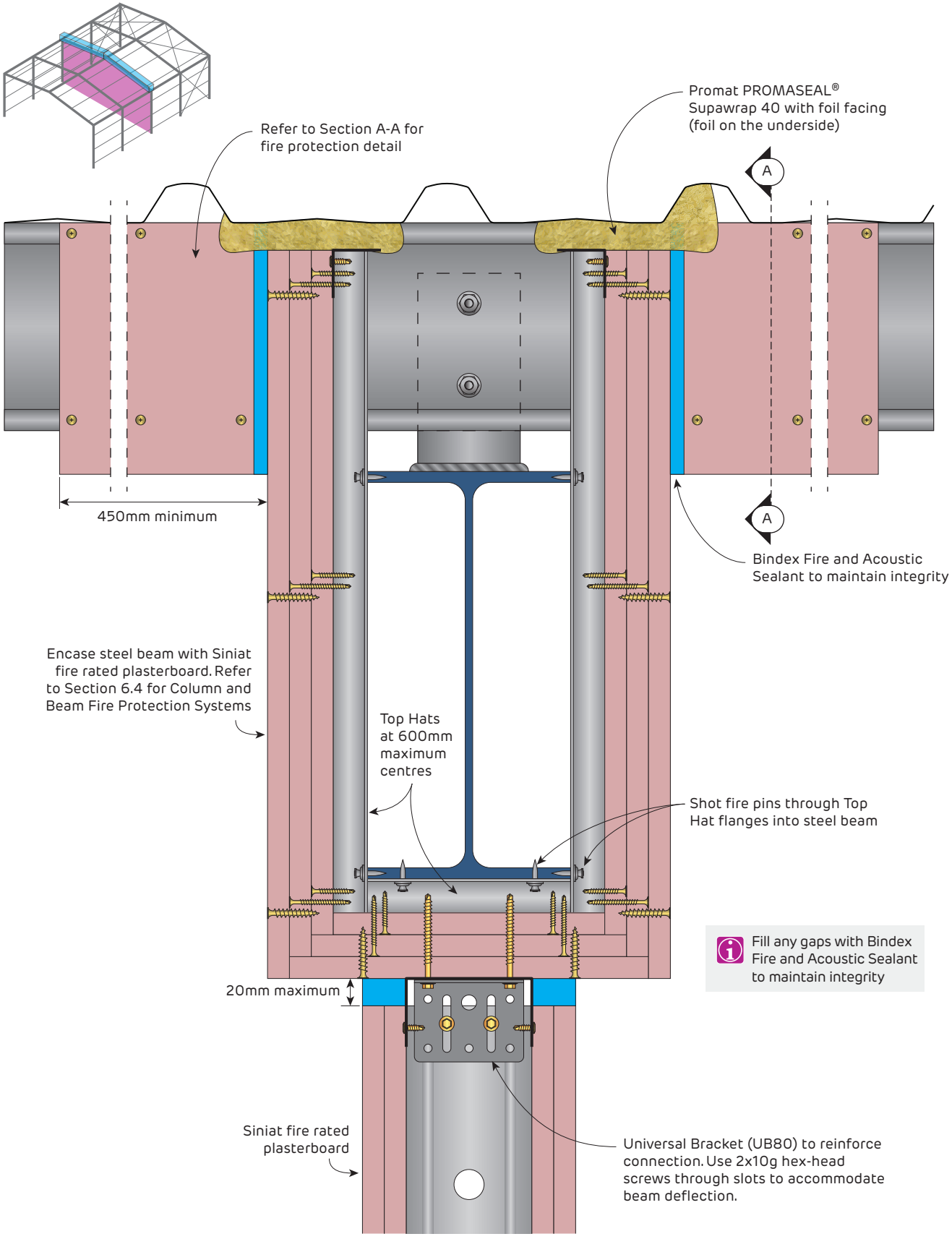

FIGURE 1 Wall Head Detail
Up to FRL 120/120/120
Section

Fire Rated

Wall Partition Around Steel Beam to Roof Lining - Higher Deflection Allowance

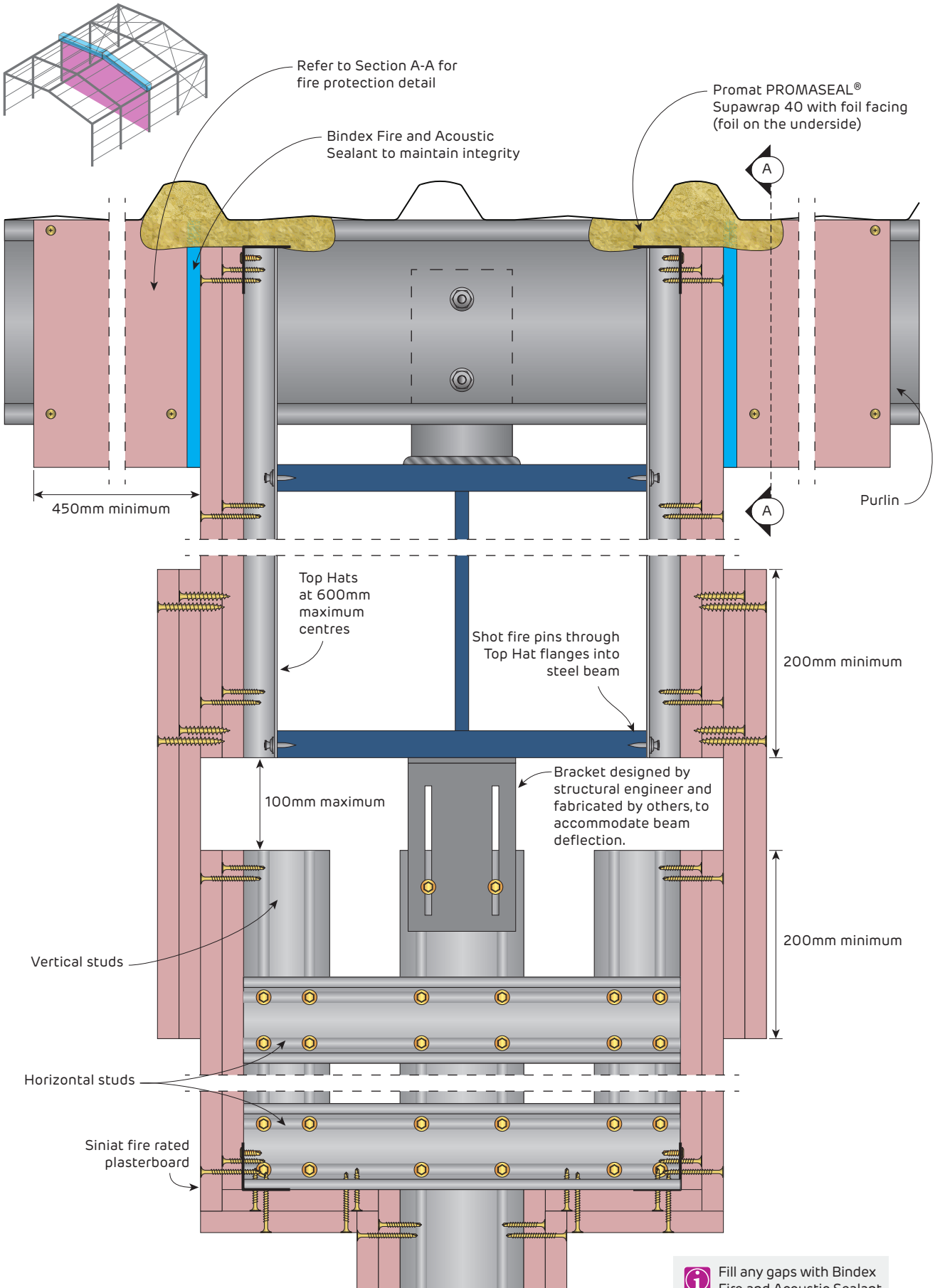

FIGURE 2 Wall Head Detail
Up to FRL 120/120/120 - Section

Fill any gaps with Bindex Fire and Acoustic Sealant to maintain integrity

Fire Rated
Wall Partition Around Steel Beam to Roof Lining

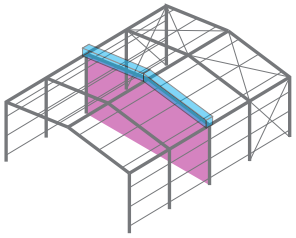

Fill any gaps with Bindex Fire and Acoustic Sealant to maintain integrity

SECTION A-A Wall Head Detail for C Purlin
Up to FRL 120/120/120
Section

Fire Rated
Wall Partition Around Steel Beam to Roof Lining

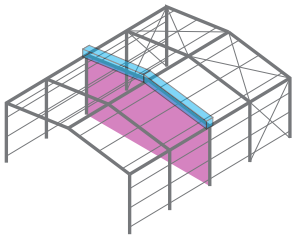

Fill any gaps with Bindex Fire and Acoustic Sealant to maintain integrity

SECTION A-A Wall Head Detail for Z Purlin
Up to FRL 120/120/120
Section

Fire Rated
Wall Partition Around Steel Column to Precast Concrete

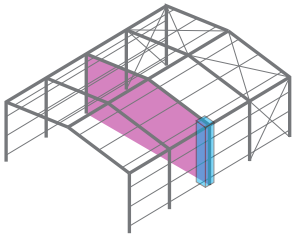

FIGURE 3 Wall End to Precast Wall
Up to FRL 120/120/120
Plan

Fire Rated
Wall Partition Around Steel Column to Wall Cladding

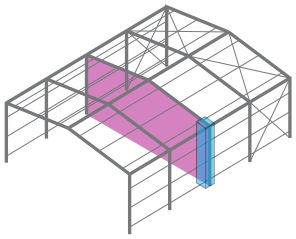

FIGURE 4 Wall End to Wall Cladding
Up to FRL 120/120/120
Plan

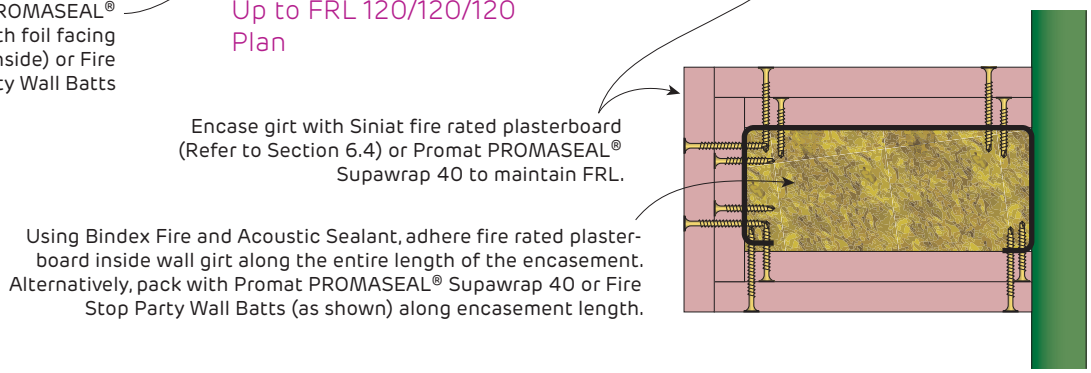

SECTION B-B Fire Protection of Wall Girt
Section

Fire Rated
Wall Partition to Wall Cladding

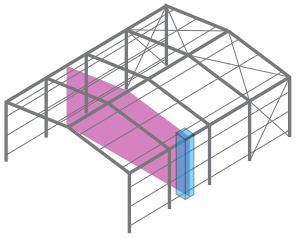

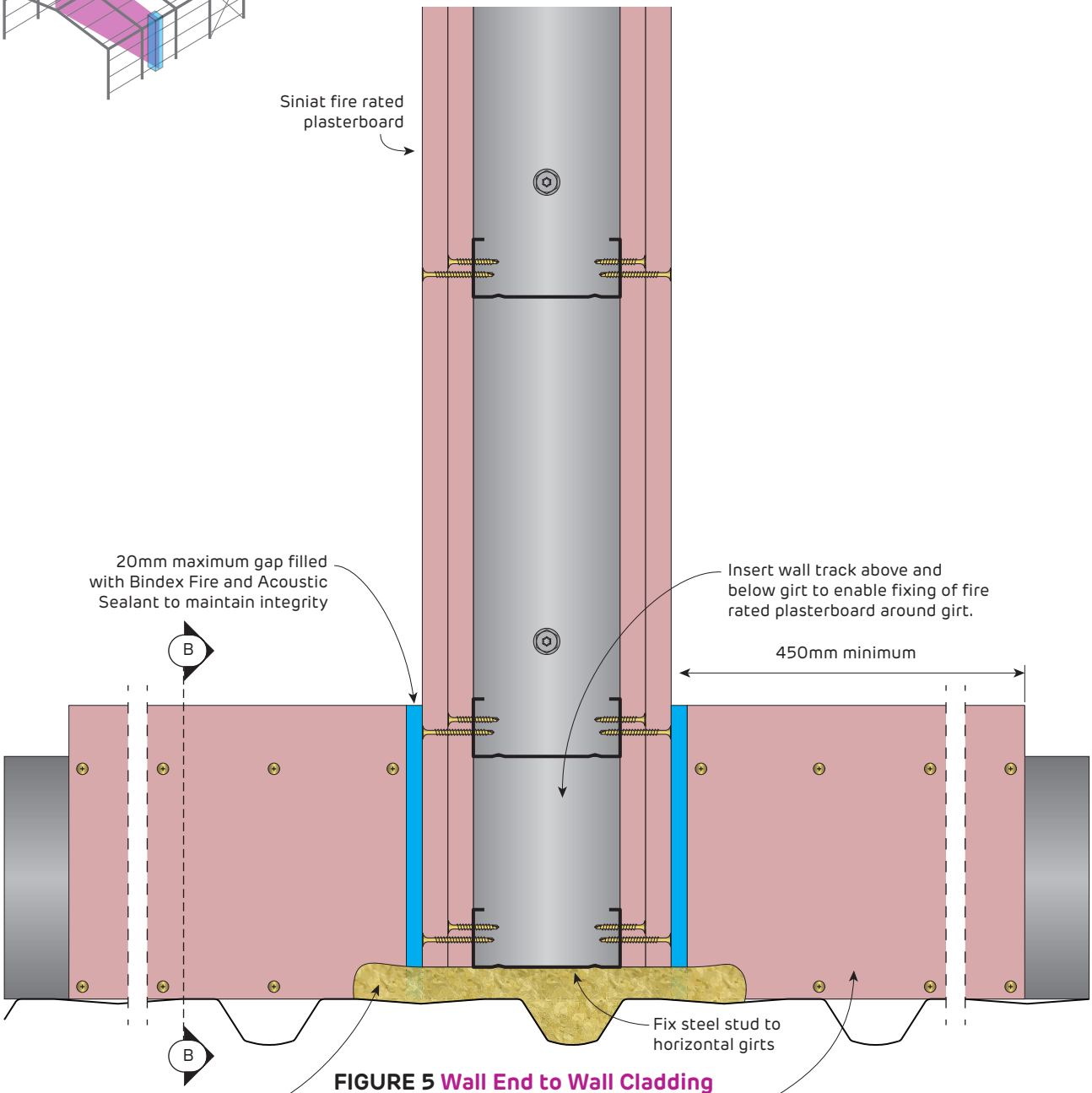

FIGURE 5 Wall End to Wall Cladding
Up to FRL 120/120/120
Plan

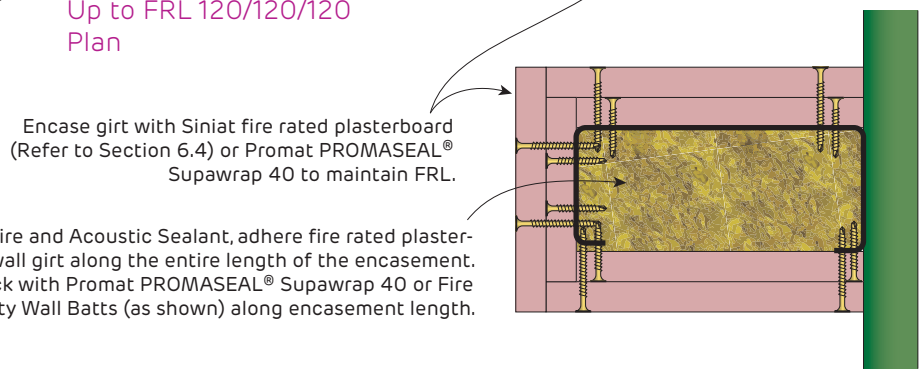

Fill any gaps with Bindex Fire and Acoustic Sealant to maintain integrity

SECTION B-B Fire Protection of Wall Girt
Section

Fire Rated
Wall Head Details Around C or Z Purlins

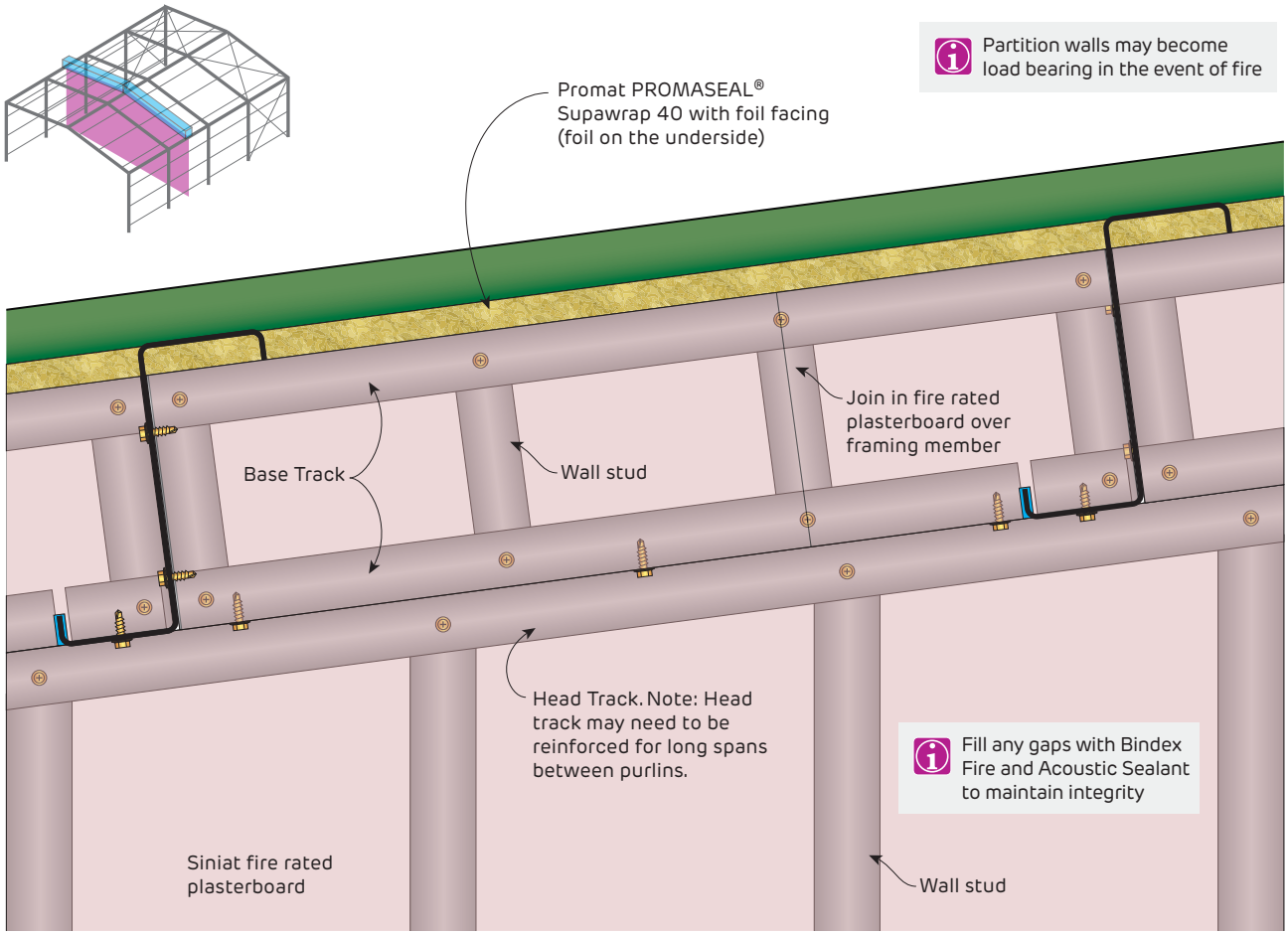

FIGURE 6 Partition Wall to Roof - Perpendicular to C or Z Purlins
Up to FRL 120/120/120
Section

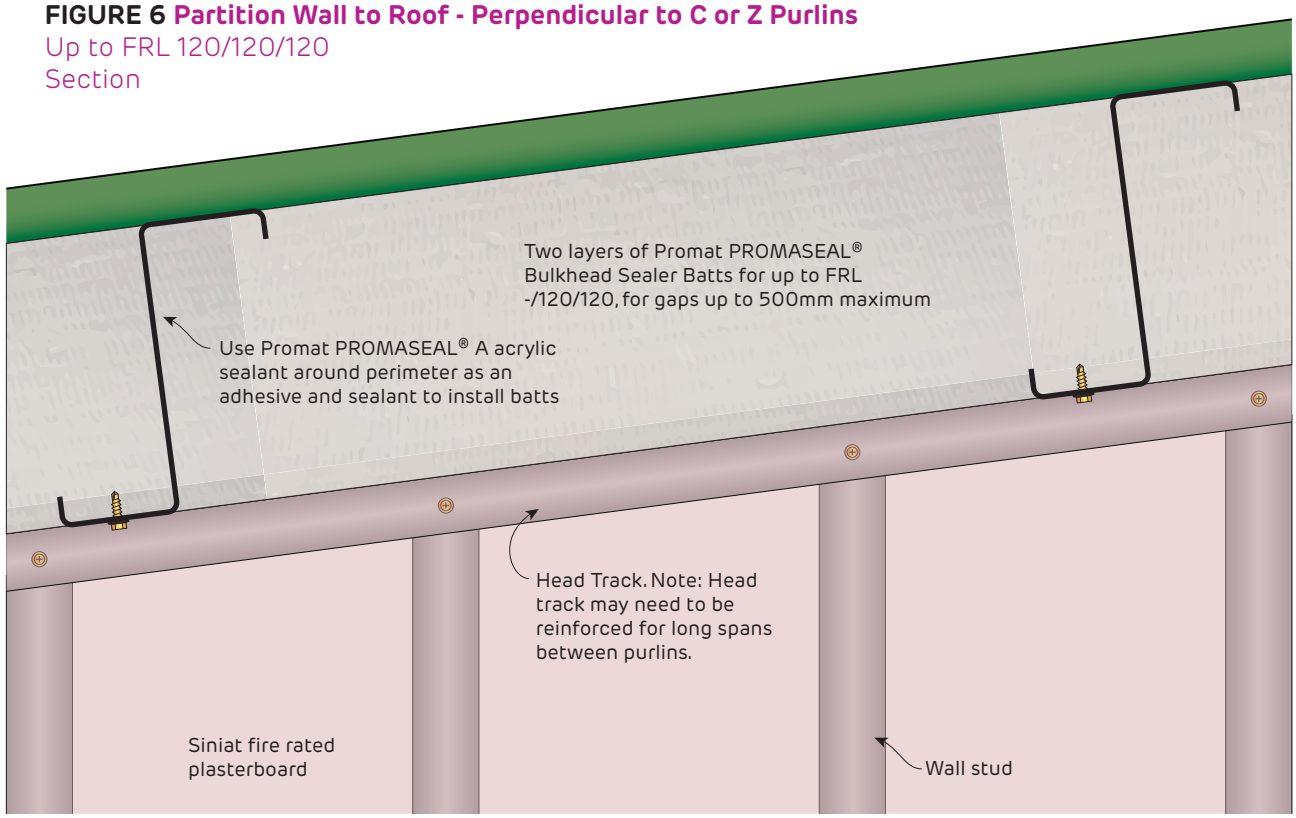

FIGURE 7 Partition Wall to Roof - Perpendicular to C or Z Purlins
Up to FRL 120/120/120
Section

Fire Rated
Wall Head Details Around C or Z Purlins

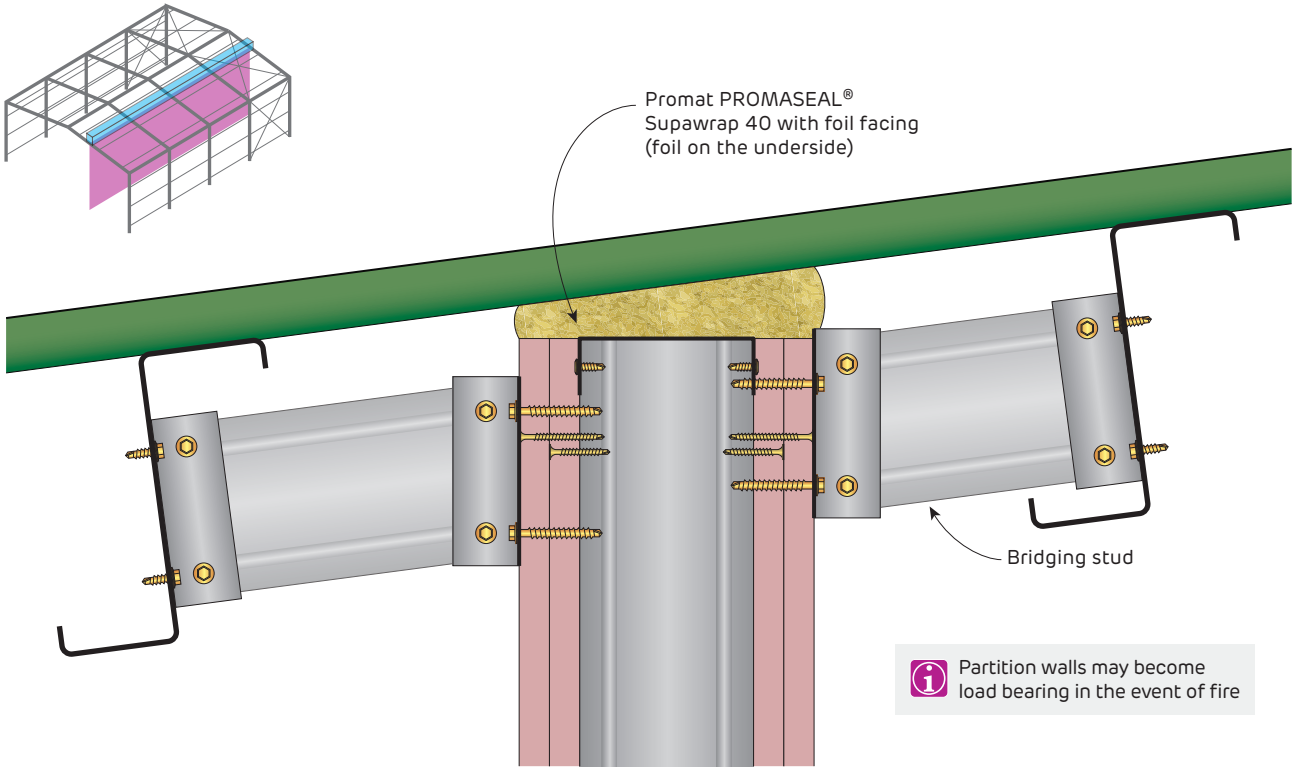

FIGURE 8 Partition Wall to Roof - Parallel to Purlins
Up to FRL 120/120/120
Section

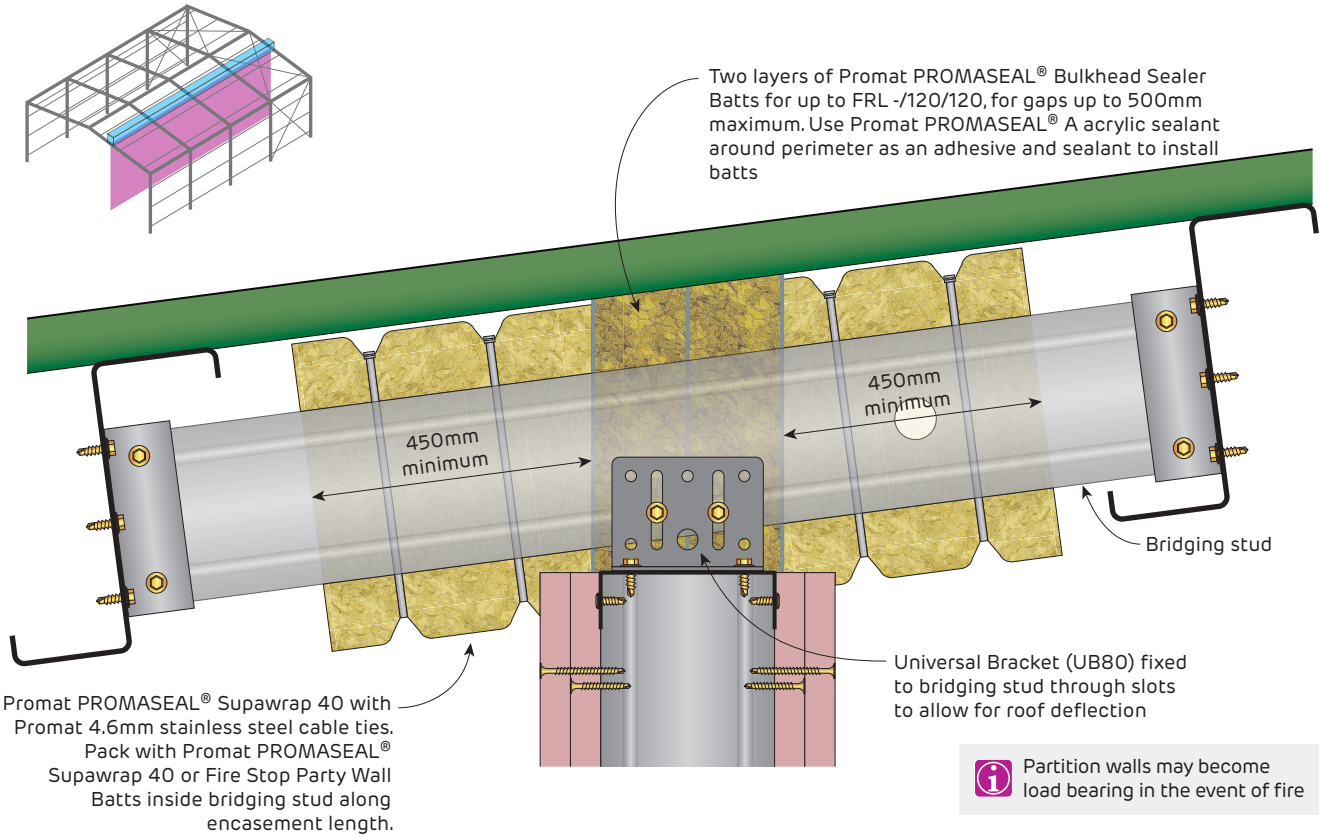

FIGURE 9 Partition Wall to Roof - Parallel to Purlins
Up to FRL 120/120/120
Section



SYSTEMS	**362**
SYSTEM DIRECTORY	362
INSTALLATION	**368**
GENERAL REQUIREMENTS	368
FRAMING	369
STEEL PROFILE INFORMATION	377
PLASTERBOARD LAYOUT	378
PLASTERBOARD FIXING	379
EXTERIOR CLADDING	380
CONSTRUCTION DETAILS	**384**

4.1 External Steel Stud Walls

External steel framed walls protect the inside from weather, noise and when applicable, fire. They must also comply with local energy efficiency provisions.

Fire rated systems in this section can satisfy the National Construction Codes Fire Safety requirements for spandrel walls and walls built close to a fire source feature such as a property boundary. These walls are often required to be fire rated from the outside only.

multishield forms part of the outer wall adding fire and sound resistance which is covered by a moisture barrier and external cladding for weather protection.

This section contains systems, installation instructions and construction details for fire rated and non-fire rated external steel framed walls.

System Directory

System	Inside Lining	Outer Lining and Cladding	Frame	FRL	Acoustics[1]	
					Rw	Rw+Ctr
SSW73	1 x 10mm **masta**shield	6.0mm fibre cement sheeting	Steel stud	-	42	31
SSW274	2 x 10mm **sound**shield	6.0mm fibre cement sheeting	Steel stud	-	47	35
SSW378	3 x 13mm **fire**shield	6.0mm fibre cement sheeting	Steel stud	-	52	39
SSW470	1 x 10mm **masta**shield	1 x 13mm **multi**shield plus any external cladding	Steel stud	30/30/30 from outside	41	31
SSW473	1 x 10mm **masta**shield	1 x 16mm **multi**shield plus any external cladding	Steel stud	60/60/60 from outside	42	32
SSW471	1 x 10mm **masta**shield	2 x 13mm **multi**shield plus any external cladding	Steel stud	90/90/90 from outside	46	35
SSW472	1 x 10mm **masta**shield	3 x 13mm **multi**shield plus any external cladding	Steel stud	120/120/120 from outside	50	38
SSW491	Optional	2 x 13mm **multi**shield plus any external cladding	Steel stud	30/30/30 from outside	34	30
SSW494	Optional	2 x 16mm **multi**shield plus any external cladding	Steel stud	60/60/60 from outside	35	31
SSW492	Optional	3 x 13mm **multi**shield plus any external cladding	Steel stud	90/90/90 from outside	37	34
SSW495	Optional	3 x 16mm **multi**shield plus any external cladding	Steel stud	120/120/120 from outside	38	35
SSW496	1 x 13mm **fire**shield	1 x 13mm **multi**shield plus any external cladding	Steel stud	-/60/60	43	32
SSW476	1 x 16mm **fire**shield	1 x 16mm **multi**shield plus any external cladding	Steel stud	60/60/60 or -/90/90 using glasswool	44	35
SSW477	1 x 16mm **fire**shield	2 x 13mm **multi**shield plus any external cladding	Steel stud	90/90/90 from outside 60/60/60 from inside	48	39
SSW478	2 x 13mm **fire**shield	2 x 13mm **multi**shield plus any external cladding	Steel stud	90/90/90	53	45
SSW479	2 x 16mm **fire**shield	2 x 16mm **multi**shield plus any external cladding	Steel stud	120/120/120	54	37
SSW70	1 x 10mm **masta**shield	90mm masonry	Steel stud	60/60/60 from outside	58	47
SSW373	1 x 16mm **fire**shield	90mm masonry	Steel stud	60/60/60	59	49
SSW371	2 x 13mm **fire**shield	90mm masonry	Steel stud	90/90/90	62	**53**
SSW374	2 x 16mm **fire**shield	90mm masonry	Steel stud	120/120/120	65	**54**

1. Sound Insulation values determined using glasswool insulation.

SSW73

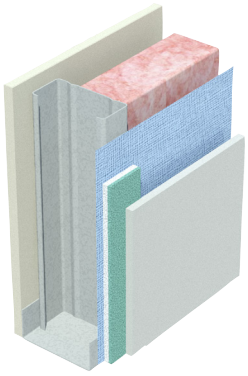

- 1 layer of 10mm **masta**shield or 10mm **water**shield
- Minimum 90mm steel stud framing at 600mm maximum centres
- Optional wall insulation
- Wall wrap + thermal break
- 1 layer of minimum 6mm James Hardie™ fibre cement sheeting

Stud Size (mm)	Width (mm)	Insulation Pathway R-Value (m²K/W)	Sound Insulation Rw (Rw + Ctr)		
			No insulation	Pink® Batts Wall R2.0HD	
90	120 approx	0.63 plus insulation R value*	38 (29)	42 (31)	Report Insul

SSW274

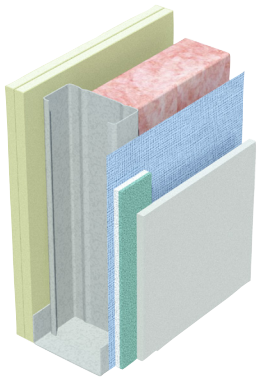

- 2 layers of 10mm **sound**shield or 10mm **opal**
- Minimum 90mm steel stud framing at 600mm maximum centres
- Optional wall insulation
- Wall wrap + thermal break
- 1 layer of minimum 6mm James Hardie™ fibre cement sheeting

Stud Size (mm)	Width (mm)	Insulation Pathway R-Value (m²K/W)	Sound Insulation Rw (Rw + Ctr)		
			No insulation	Pink® Batts Wall R2.0HD	
90	130 approx	0.72 plus insulation R value*	43 (31)	47 (35)	Report Insul

SSW378

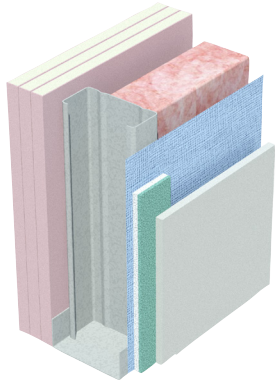

- 3 layers of 13mm **fire**shield or 13mm **multi**shield
- Minimum 90mm steel stud framing at 600mm maximum centres
- Optional wall insulation
- Wall wrap + thermal break
- 1 layer of minimum 6mm James Hardie™ fibre cement sheeting

Stud Size (mm)	Width (mm)	Insulation Pathway R-Value (m²K/W)	Sound Insulation Rw (Rw + Ctr)		
			No insulation	Pink® Batts Wall R2.0HD	
90	150 approx	0.79 plus insulation R value*	48 (36)	53 (39)	Report Insul

SSW470

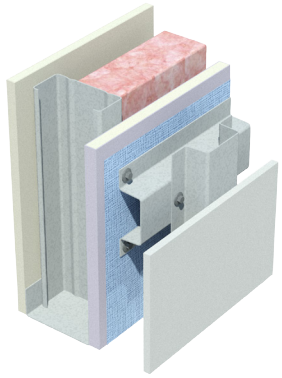

- 1 layer of 10mm **masta**shield or 10mm **water**shield
- Minimum 90mm steel stud framing at 600mm maximum centres
- Optional wall insulation
- 1 layer of 13mm **multi**shield or 13mm **tru**rock
- Wall wrap
- Any external wall cladding with a drained and vented cavity

Fire Resistance Level

30/30/30
rated from the outside only

Report FC13921

Stud Size (mm)	Width (mm)	Insulation Pathway R-Value (m²K/W)	Sound Insulation Rw (Rw + Ctr)		
			No insulation	Pink® Batts Wall R2.0HD	
90	170 approx	0.84 plus insulation R value*	37 (29)	41 (31)	Report Insul

* R-value based on 40mm batten cavity and anti-glare foil wall wrap - does not include thermal bridging pathway. Insulation shown is the minimum required to meet the acoustic rating. Refer to Chapter 2 for more information.

SSW473

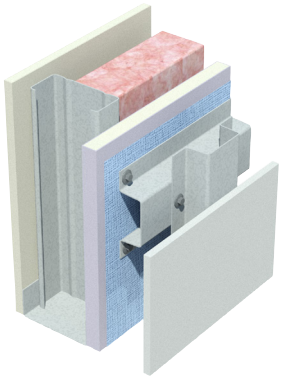

- 1 layer of 10mm **masta**shield or 10mm **water**shield
- Minimum 90mm steel stud framing at 600mm maximum centres
- Optional wall insulation
- 1 layer of 16mm **multi**shield or 16mm **tru**rock
- Wall wrap
- Any external wall cladding with a drained and vented cavity

Fire Resistance Level

60/60/60
rated from the outside only

Report
FC13921

Stud Size (mm)	Width (mm)	Insulation Pathway R-Value (m^2K/W)	Sound Insulation Rw (Rw + Ctr)		
			No insulation	Pink® Batts Wall R2.0HD	
90	175 approx	0.86 plus insulation R value*	38 (30)	42 (32)	Report Insul

SSW471

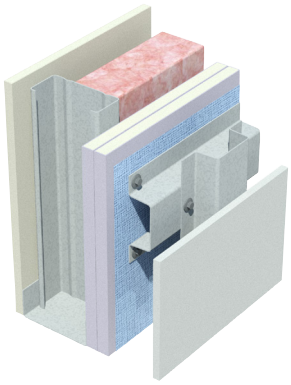

- 1 layer of 10mm **masta**shield or 10mm **water**shield
- Minimum 90mm steel stud framing at 600mm maximum centres
- Optional wall insulation
- 2 layers of 13mm **multi**shield or 13mm **tru**rock
- Wall wrap
- Any external wall cladding with a drained and vented cavity

Fire Resistance Level

90/90/90
rated from the outside only

Report
FC13921

Stud Size (mm)	Width (mm)	Insulation Pathway R-Value (m^2K/W)	Sound Insulation Rw (Rw + Ctr)		
			No insulation	Pink® Batts Wall R2.0HD	
90	185 approx	0.91 plus insulation R value*	43 (33)	46 (35)	Report Insul

SSW472

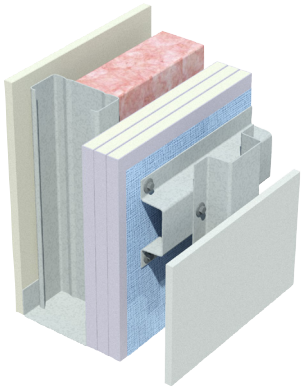

- 1 layer of 10mm **masta**shield or 10mm **water**shield
- Minimum 90mm steel stud framing at 600mm maximum centres
- Optional wall insulation
- 3 layers of 13mm **multi**shield or 13mm **tru**rock
- Wall wrap
- Any external wall cladding with a drained and vented cavity

Fire Resistance Level

120/120/120
rated from the outside only

Report
FC13921

Stud Size (mm)	Width (mm)	Insulation Pathway R-Value (m^2K/W)	Sound Insulation Rw (Rw + Ctr)		
			No insulation	Pink® Batts Wall R2.0HD	
90	195 approx	0.99 plus insulation R value*	46 (36)	50 (38)	Report Insul

SSW491

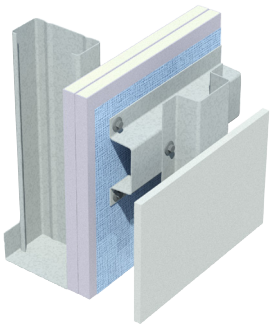

- Optional internal wall lining
- Optional wall insulation
- Minimum 90mm steel stud framing at 600mm maximum centres
- 2 layers of 13mm **multi**shield or 13mm **tru**rock
- Wall wrap
- Any external wall cladding with a drained and vented cavity

Fire Resistance Level

30/30/30
rated from the outside only

Report
FC13921

Stud Size (mm)	Width (mm)	Insulation Pathway R-Value (m^2K/W)	Sound Insulation Rw (Rw + Ctr)		
			No insulation	Pink® Batts Wall R2.0HD	
90	175 approx	0.85 plus insulation R value*	34 (30)	34 (30)	Report Day Design 3094-33

* R-value based on 40mm batten cavity and anti-glare foil wall wrap - does not include thermal bridging pathway. Insulation shown is the minimum required to meet the acoustic rating. Refer to Chapter 2 for more information.

SSW494

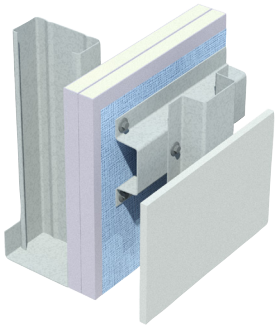

- Optional internal wall lining
- Optional wall insulation
- Minimum 90mm steel stud framing at 600mm maximum centres
- 2 layers of 16mm **multi**shield or 16mm **tru**rock
- Wall wrap
- Any external wall cladding with a drained and vented cavity

Fire Resistance Level

60/60/60
rated from the outside only

Report
FC13921

Stud Size (mm)	Width (mm)	Insulation Pathway R-Value (m²K/W)	Sound Insulation Rw (Rw + Ctr)		
			No insulation	Pink® Batts Wall R2.0HD	
90	180 approx	0.89 plus insulation R value*	35 (31)	35 (31)	Report Day Design 3094-33

SSW492

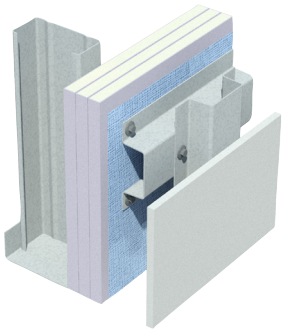

- Optional internal wall lining
- Optional wall insulation
- Minimum 90mm steel stud framing at 600mm maximum centres
- 3 layers of 13mm **multi**shield or 13mm **tru**rock
- Wall wrap
- Any external wall cladding with a drained and vented cavity

Fire Resistance Level

90/90/90
rated from the outside only

Report
FC13921

Stud Size (mm)	Width (mm)	Insulation Pathway R-Value (m²K/W)	Sound Insulation Rw (Rw + Ctr)		
			No insulation	Pink® Batts Wall R2.0HD	
90	180 approx	0.93 plus insulation R value*	37 (34)	37 (34)	Report Day Design 3094-33

SSW495

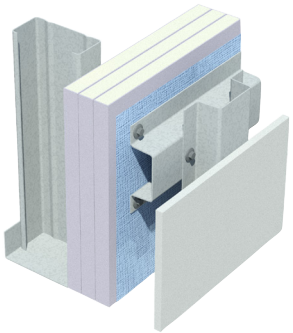

- Optional internal wall lining
- Optional wall insulation
- Minimum 90mm steel stud framing at 600mm maximum centres
- 3 layers of 16mm **multi**shield or 16mm **tru**rock
- Wall wrap
- Any external wall cladding with a drained and vented cavity

Fire Resistance Level

120/120/120
rated from the outside only

Report
FC13921

Stud Size (mm)	Width (mm)	Insulation Pathway R-Value (m²K/W)	Sound Insulation Rw (Rw + Ctr)		
			No insulation	Pink® Batts Wall R2.0HD	
90	195 approx	0.98 plus insulation R value*	38 (35)	38 (35)	Report Day Design 3094-33

SSW496

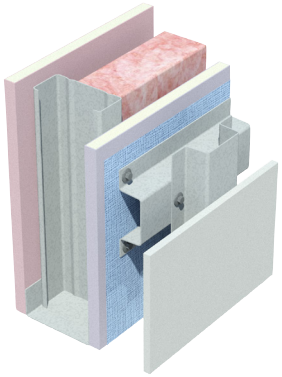

- 1 layer of 13mm **fire**shield
- Minimum 90mm steel stud framing at 600mm maximum centres
- Optional wall insulation
- 1 layer of 13mm **multi**shield or 13mm **tru**rock
- Wall wrap
- Any external wall cladding with a drained and vented cavity

Fire Resistance Level

-/60/60
rated from both sides

Report
FC13921

Stud Size (mm)	Width (mm)	Insulation Pathway R-Value (m²K/W)	Sound Insulation Rw (Rw + Ctr)		
			No insulation	Pink® Batts Wall R2.0HD	
90	175 approx	0.85 plus insulation R value*	39 (30)	43 (32)	Report Insul

* R-value based on 40mm batten cavity and anti-glare foil wall wrap - does not include thermal bridging pathway. Insulation shown is the minimum required to meet the acoustic rating. Refer to Chapter 2 for more information.

SSW476

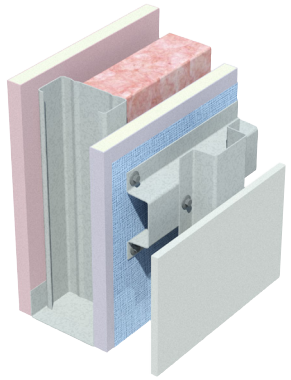

- 1 layer of 16mm **fire**shield
- Minimum 90mm steel stud framing at 600mm maximum centres
- Optional wall insulation
- 1 layer of 16mm **multi**shield or 16mm **tru**rock
- Wall wrap
- Any external wall cladding with a drained and vented cavity

Fire Resistance Level
60/60/60
rated from both sides
Report FAR3371
-/90/90
rated from both sides using glasswool insulation
Report FC13921

Stud Size (mm)	Width (mm)	Insulation Pathway R-Value (m^2K/W)	Sound Insulation Rw (Rw + Ctr)		
			No insulation	Pink® Batts Wall R2.0HD	Report Insul
90	180 approx	0.89 plus insulation R value*	40 (31)	44 (35)	

SSW477

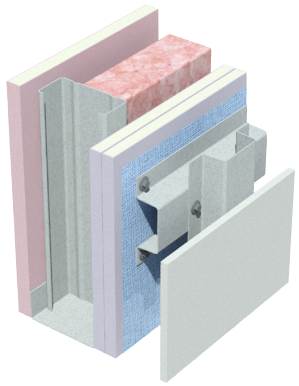

- 1 layer of 16mm **fire**shield
- Minimum 90mm steel stud framing at 600mm maximum centres
- Optional wall insulation
- 2 layers of 13mm **multi**shield or 13mm **tru**rock
- Wall wrap
- Any external wall cladding with a drained and vented cavity

Fire Resistance Level
90/90/90
rated from the outside
60/60/60
rated from the inside
Report FC13921

Stud Size (mm)	Width (mm)	Insulation Pathway R-Value (m^2K/W)	Sound Insulation Rw (Rw + Ctr)		
			No insulation	Pink® Batts Wall R2.0HD	Report Insul
90	190 approx	0.95 plus insulation R value*	45 (36)	48 (39)	

SSW478

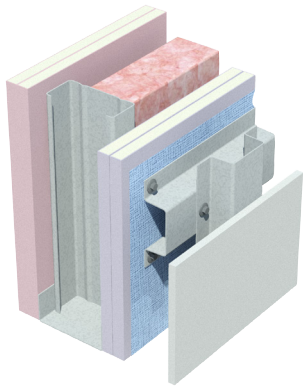

- 2 layers of 13mm **fire**shield
- Minimum 90mm steel stud framing at 600mm maximum centres
- Optional wall insulation
- 2 layers of 13mm **multi**shield or 13mm **tru**rock
- Wall wrap
- Any external wall cladding with a drained and vented cavity

Fire Resistance Level
90/90/90
-/120/120
rated from both sides
Report FC13921

Stud Size (mm)	Width (mm)	Insulation Pathway R-Value (m^2K/W)	Sound Insulation Rw (Rw + Ctr)		
			No insulation	Pink® Batts Wall R2.0HD	Report Insul
90	210 approx	1.01 plus insulation R value*	50 (41)	53 (45)	

SSW479

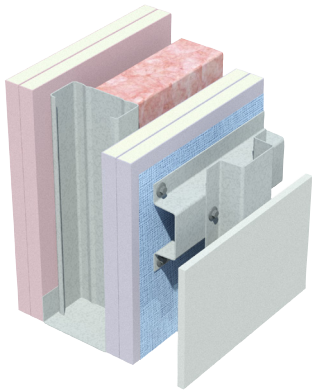

- 2 layers of 16mm **fire**shield
- Minimum 90mm steel stud framing at 600mm maximum centres
- Optional wall insulation
- 2 layers of 16mm **multi**shield or 16mm **tru**rock
- Wall wrap
- Any external wall cladding with a drained and vented cavity

Fire Resistance Level
120/120/120
rated from both sides
Report FC13921

Stud Size (mm)	Width (mm)	Insulation Pathway R-Value (m^2K/W)	Sound Insulation Rw (Rw + Ctr)		
			No insulation	Pink® Batts Wall R2.0HD	Report Insul
90	210 approx	1.08 plus insulation R value*	51 (43)	54 (47)	

* R-value based on 40mm batten cavity and anti-glare foil wall wrap - does not include thermal bridging pathway. Insulation shown is the minimum required to meet the acoustic rating. Refer to Chapter 2 for more information.

SSW70

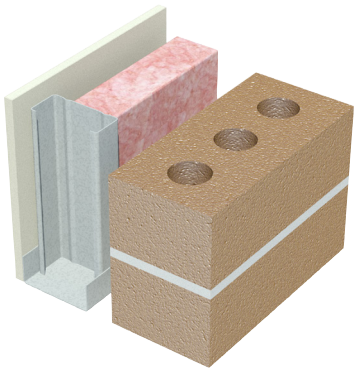

- 1 layer of 10mm **masta**shield or **water**shield
- Minimum 90mm steel stud framing at 600mm maximum centres
- Optional wall insulation
- Minimum 40mm air-gap
- Minimum 90mm masonry with FRL 60/60/60 and minimum laid weight 130 kg/m²

Fire Resistance Level

60/60/60
rated from the outside only

Report
FC13921

Stud Size (mm)	Width (mm)	Insulation Pathway R-Value (m²K/W)	Sound Insulation Rw (Rw + Ctr)		
			No insulation	Pink® Batts Wall R2.0HD	
90	230 approx	0.37 plus insulation R value	47 (41)	58 (47)	Report Insul

SSW373

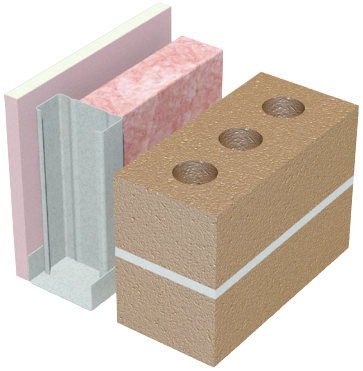

- 1 layer of 16mm **fire**shield, **multi**shield or **tru**rock
- Minimum 90mm steel stud framing at 600mm maximum centres
- Optional wall insulation
- Minimum 40mm air-gap
- Minimum 90mm masonry with FRL 60/60/60 and minimum laid weight 130 kg/m²

System designed to provide fire protection to stud (not masonry)

Fire Resistance Level

60/60/60
rated from both sides

Report
FC13921

Stud Size (mm)	Width (mm)	Insulation Pathway R-Value (m²K/W)	Sound Insulation Rw (Rw + Ctr)		
			No insulation	Pink® Batts Wall R2.0HD	
90	236 approx	0.40 plus insulation R value	48 (43)	59 (49)	Report Insul

SSW371

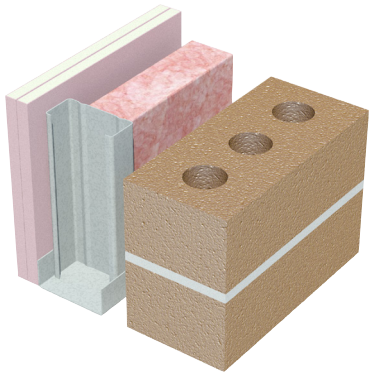

- 2 layers of 13mm **fire**shield,**multi**shield or **tru**rock
- Minimum 90mm steel stud framing at 600mm maximum centres
- Optional wall insulation
- Minimum 40mm air-gap
- Minimum 90mm masonry with FRL 60/60/60 and minimum laid weight 130 kg/m²

System designed to provide fire protection to stud (not masonry)

Fire Resistance Level

90/90/90
rated from both sides

Report
FC13921

Stud Size (mm)	Width (mm)	Insulation Pathway R-Value (m²K/W)	Sound Insulation Rw (Rw + Ctr)		
			No insulation	Pink® Batts Wall R2.0HD	
90	246 approx	0.46 plus insulation R value	51 (47)	62 (**53**)	Report Insul

SSW374

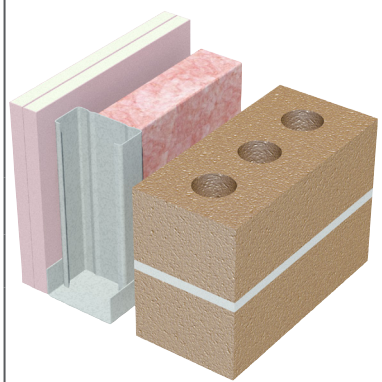

- 2 layers of 16mm **fire**shield,**multi**shield or **tru**rock
- Minimum 90mm steel stud framing at 600mm maximum centres
- Optional wall insulation
- Minimum 40mm air-gap
- Minimum 90mm masonry with FRL 60/60/60 and minimum laid weight 130 kg/m²

System designed to provide fire protection to stud (not masonry)

Fire Resistance Level

120/120/120
rated from both sides

Report
FC13921

Stud Size (mm)	Width (mm)	Insulation Pathway R-Value (m²K/W)	Sound Insulation Rw (Rw + Ctr)		
			No insulation	Pink® Batts Wall R2.0HD	
90	242 approx	0.50 plus insulation R value	53 (49)	65 (**55**)	Report Insul

* R-value does not include thermal bridging pathway. Insulation shown is the minimum required to meet the acoustic rating. Refer to Chapter 2 for more information.

General Requirements

	Non-fire Rated	Fire Rated
Install control joints in plasterboard walls: > At 12m maximum intervals > At all control joints in the structure > At any change in the substrate	✓	✓
Jointing of **multi**shield is not required due to the overlying breathable wall wrap and cladding.		✓
Joint the face layer on the internal side. As a minimum, use paper tape with any Siniat jointing compound applied in one or two coats to the thickness of two coats. Alternatively, use **bindex** fire and acoustic sealant according to the Product Data Sheet.		✓
Use approved fire rated penetration details. Fire penetrations may require fire collars or other devices to maintain fire performance. Refer to the **i** box below.		✓
Use approved fire rated penetration details for systems that use the internal non-fire rated plasterboard wall lining to maintain the FRL. Refer to **i** box below.		✓
Protect plasterboard sheets from the weather when installed on the exterior side of external wall framing until the moisture barrier and exterior cladding are installed.	✓	✓
Protect plasterboard from water pooling at ground level.	✓	✓
Use **bindex** fire and acoustic sealant on all gaps and around perimeter.		✓
Attach all fixtures to studs or purpose installed noggings. Wall anchors must not be fixed only to the plasterboard of fire rated walls.		✓

> For acceptable modifications or variations to fire rated systems, refer to Section 2.3 Fire Resistance.

> Penetrations in external walls of Class 1 buildings do not need to have an FRL, refer to NCC Volume Two, Clause 3.7.1.5

> Insulation products nominated in system tables are the minimum required to meet the acoustic rating. Insulation with higher R-value may be required to meet the desired system R-value.

Framing

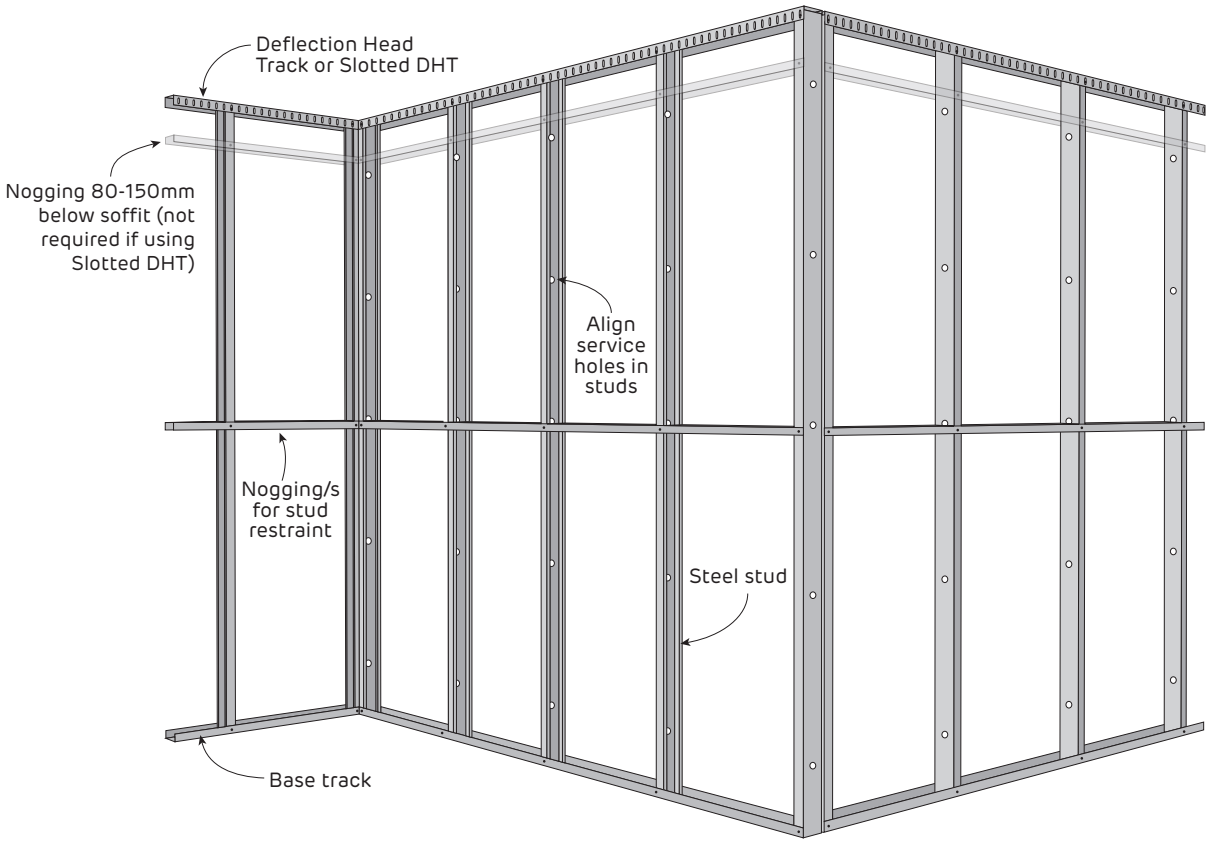

FIGURE 1 Typical External Steel Frame Wall Layout

	Non-fire Rated	Fire Rated
Use a Deflection Head Track if soffit movement of up to 20mm is expected. For higher requirements contact Siniat. Refer to Construction Details for clearances.	✓	✓
Framing members as per framing table or structural design up to 600mm maximum. Refer to the Stud Spacing Charts for appropriate framing selection.	✓	✓
Face studs in the same direction if possible, to allow easier fastening of wall lining. However, installation of some services may require the studs to be positioned in opposite directions. Refer to Construction Details.	✓	✓
Twist studs into tracks and push studs down completely into bottom track.	✓	✓
Structural wall designs must allow for the intended dead, live and wind loads in accordance with the AS/NZS 1170 series.	✓	✓

Table 1 Maximum Head and Base Track Anchor Spacing

Stud Spacing (mm)	Maximum Anchor Spacing (mm)
600	600
450	600
400	600
300	450
200	300

1. Additional anchors 100mm maximum from track ends.
2. 150mm studs require 2 anchors across width.

> Noggings are permitted to assist the fixing of services. Copper Chromium Arsenate (CCA) treated timber must not be used.

> Plumbing and electrical services must not protrude beyond the face of the studs.

Non-Load Bearing External Steel Stud Wall

Chart 1 Stud Spacing - REGION A - HEIGHT/240 - Expressed Jointed CFC / Metal Cladding

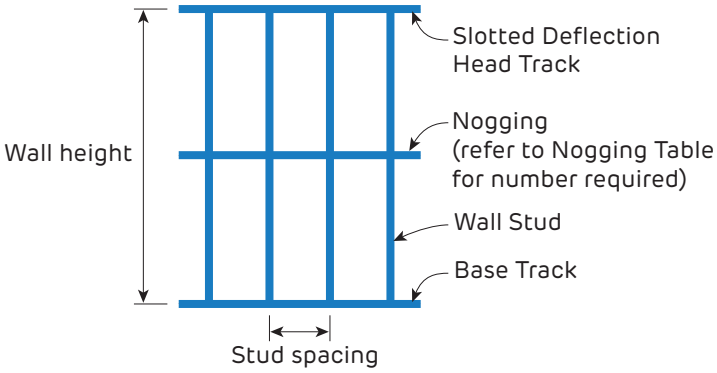

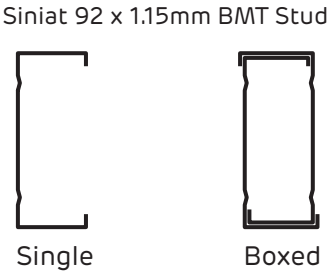

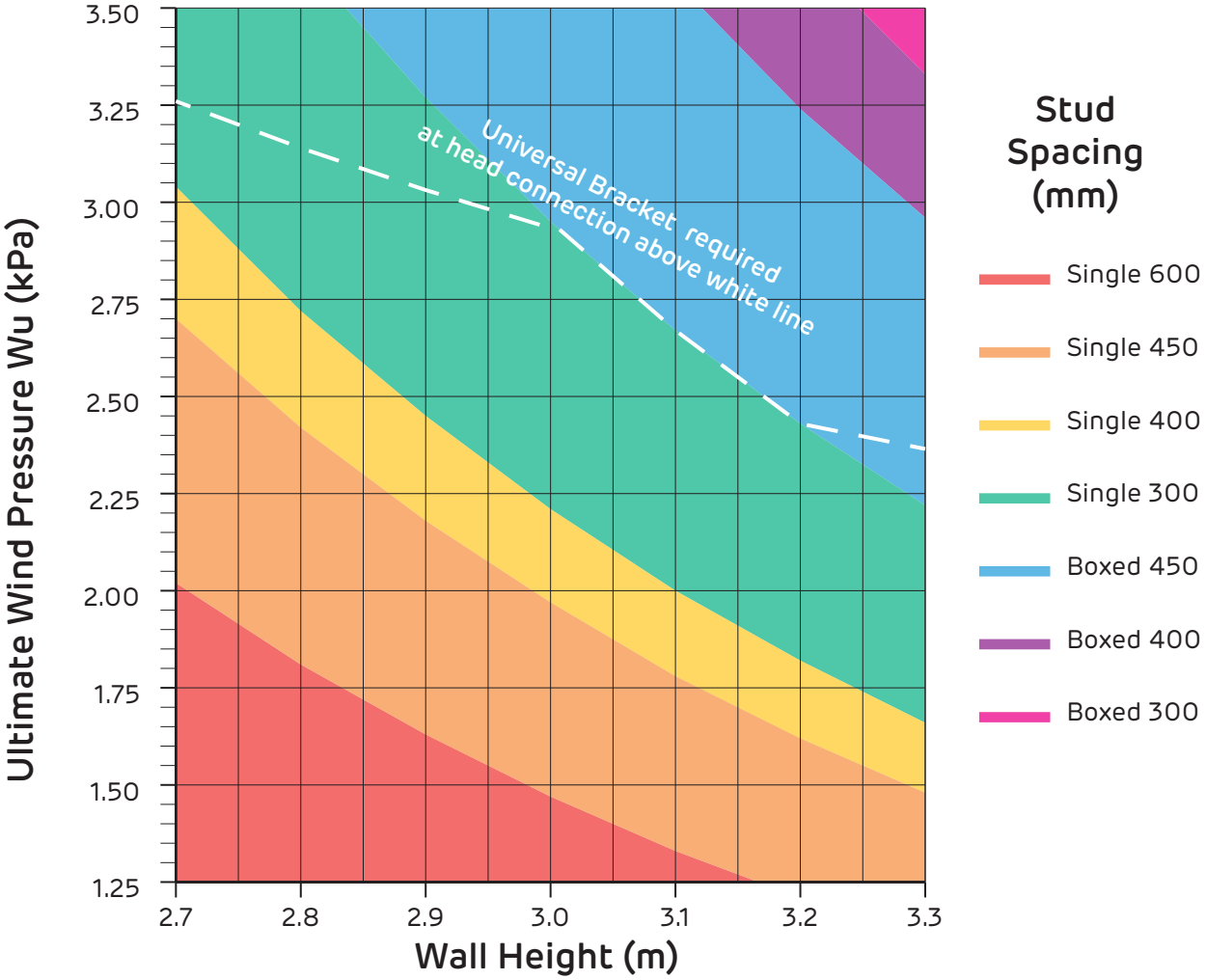

NOTES

1. Table based upon evenly distributed lateral pressures and the deflection limit stated. A sufficient number of cladding battens/top-hats, or brick-ties must be installed to provide an even distribution of lateral load to the stud framing.
2. Serviceability wind pressure (Ws) taken as 67% of ultimate which is suitable for buildings of Importance Level 2 to 4.
3. Table includes self weight and cladding weight up to 25 kg/m^2 only. Heavier outer linings like Masonry and AAC panels must be supported at wall base. Table not applicable to axially loaded (load bearing) studs or bracing shear walls. Point loads and other loads such as shelf loads or live loads are not considered.
4. Table refers to Siniat Steel Studs of grade G300 steel with Zincalume™ AM150 corrosion protection.
5. Calculations based upon a single span and designed in accordance with *AS/NZS 4600:2018 Cold Formed Steel Structures.*
6. Base track must be 1.15mm BMT (Base Metal Thickness). Stud must be fixed to base track with 10g screws on both sides.
7. Slotted Deflection Head Track (SDHT) must be 1.15mm BMT. Studs must be fixed through SDHT slots with 10g wafer head screws on both sides.
8. Wind pressures determined in accordance with *AS/NZS 1170.2 Wind Actions.* Seek professional engineering advice to determine wind pressures for a specific project.
9. Contact Siniat or a structural engineer to check walls for earthquake actions or any imposed ceiling loads during an earthquake. Specific project information is required.
9. The nominated lateral pressures and deflection limits must be checked for suitability for a specific project.

Nogging Table

Wall Height (mm)	No. of Noggings evenly spaced
0 - 3000	1
3001 - 3300	2

1. Brick Veneer construction requires noggings at 1200mm max centres.

Anchor Demand

1. Anchor Shear (kN) demand = Wu (kPa) x Stud Spacing (m) x Wall Height (m) x 0.5
2. Anchors at maximum 1.5 x stud spacing up to 600mm maximum, and also 100mm maximum from ends.

Non-Load Bearing External Steel Stud Wall

Chart 2 Stud Spacing - REGION A - HEIGHT/360 - Rendered or Tiled CFC / AAC / Brick Veneer

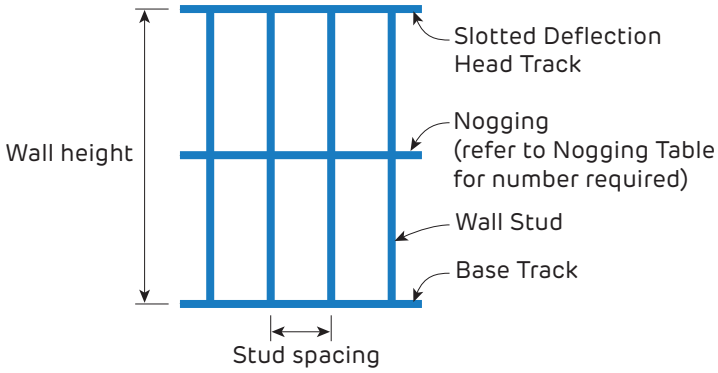

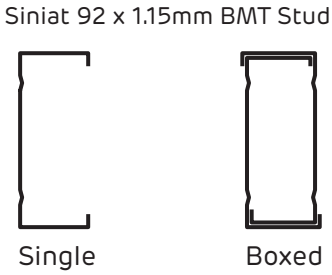

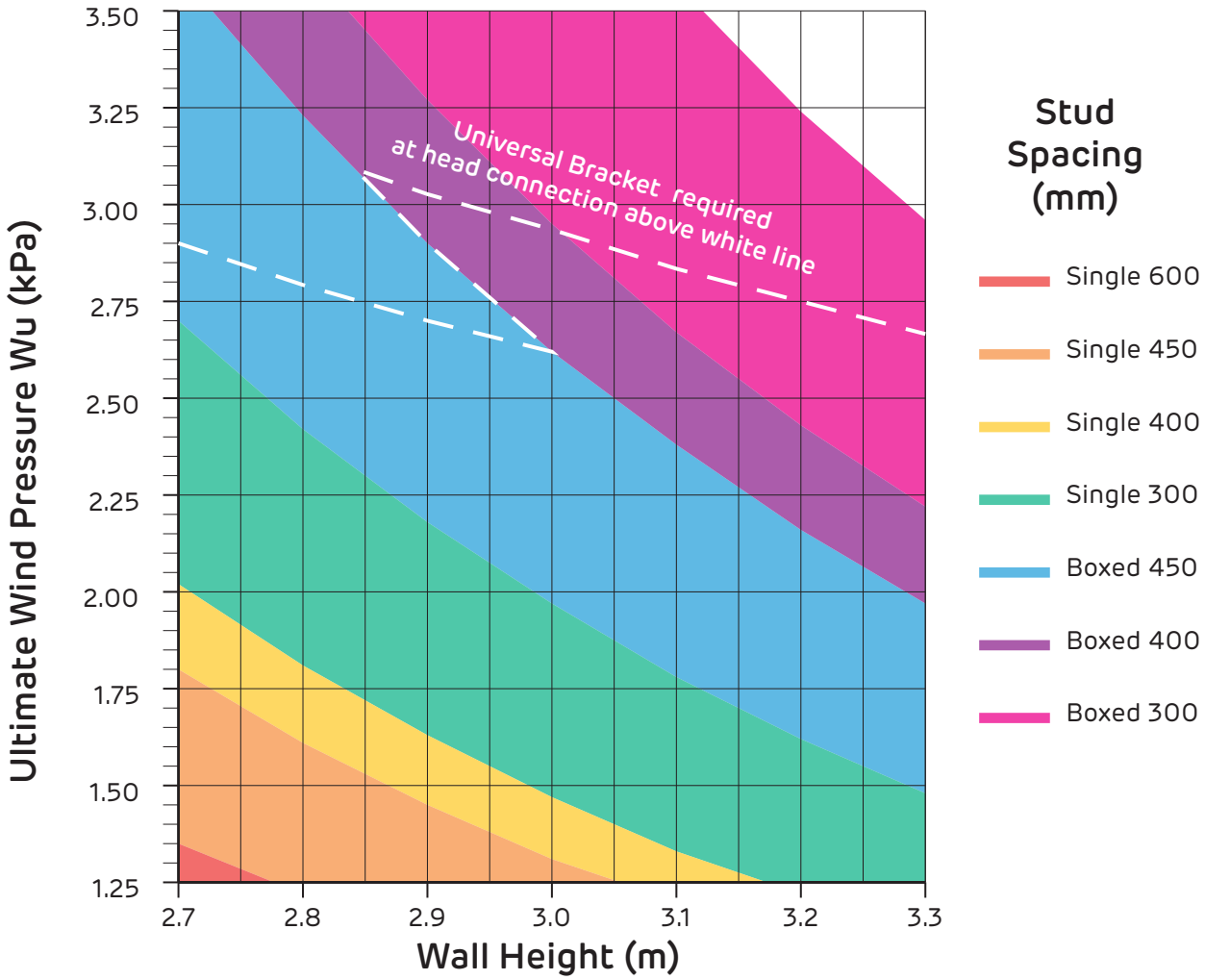

NOTES

1. Table based upon evenly distributed lateral pressures and the deflection limit stated. A sufficient number of cladding battens/top-hats, or brick-ties must be installed to provide an even distribution of lateral load to the stud framing.
2. Serviceability wind pressure (Ws) taken as 67% of ultimate which is suitable for buildings of Importance Level 2 to 4.
3. Table includes self weight and cladding weight up to 25 kg/m^2 only. Heavier outer linings like Masonry and AAC panels must be supported at wall base. Table not applicable to axially loaded (load bearing) studs or bracing shear walls. Point loads and other loads such as shelf loads or live loads are not considered.
4. Table refers to Siniat Steel Studs of grade G300 steel with Zincalume™ AM150 corrosion protection.
5. Calculations based upon a single span and designed in accordance with *AS/NZS 4600:2018 Cold Formed Steel Structures.*
6. Base track must be 1.15mm BMT (Base Metal Thickness). Stud must be fixed to base track with 10g screws on both sides.
7. Slotted Deflection Head Track (SDHT) must be 1.15mm BMT. Studs must be fixed through SDHT slots with 10g wafer head screws on both sides.
8. Wind pressures determined in accordance with *AS/NZS 1170.2 Wind Actions.* Seek professional engineering advice to determine wind pressures for a specific project.
9. Contact Siniat or a structural engineer to check walls for earthquake actions or any imposed ceiling loads during an earthquake. Specific project information is required.
9. The nominated lateral pressures and deflection limits must be checked for suitability for a specific project.

Nogging Table

Wall Height (mm)	No. of Noggings evenly spaced
0 - 3000	1
3001 - 3300	2

1. Brick Veneer construction requires noggings at 1200mm max centres.

Anchor Demand

1. Anchor Shear (kN) demand = Wu (kPa) x Stud Spacing (m) x Wall Height (m) x 0.5
2. Anchors at maximum 1.5 x stud spacing up to 600mm maximum, and also 100mm maximum from ends.

Non-Load Bearing External Steel Stud Wall

Chart 3 Stud Spacing - REGION B - HEIGHT/240 - Expressed Jointed CFC / Metal Cladding

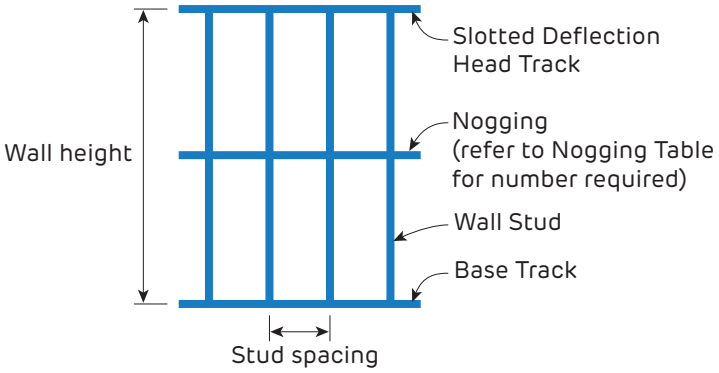

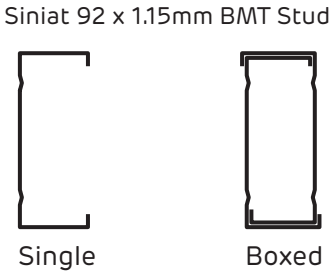

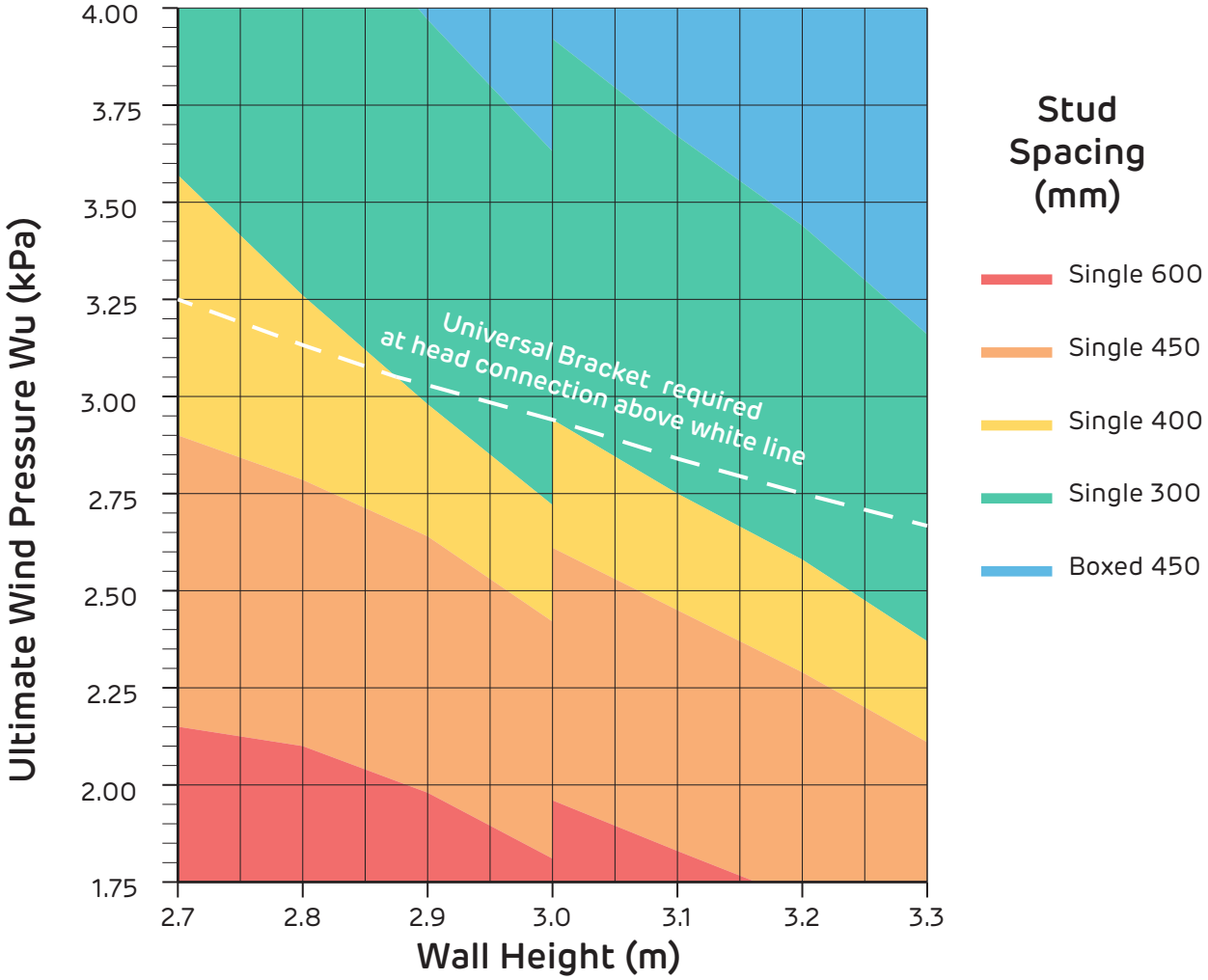

NOTES

1. Table based upon evenly distributed lateral pressures and the deflection limit stated. A sufficient number of cladding battens/top-hats, or brick-ties must be installed to provide an even distribution of lateral load to the stud framing.
2. Serviceability wind pressure (Ws) taken as 47% of ultimate which is suitable for buildings of Importance Level 2 to 4.
3. Table includes self weight and cladding weight up to 25 kg/m^2 only. Heavier outer linings like Masonry and AAC panels must be supported at wall base. Table not applicable to axially loaded (load bearing) studs or bracing shear walls. Point loads and other loads such as shelf loads or live loads are not considered.
4. Table refers to Siniat Steel Studs of grade G300 steel with Zincalume™ AM150 corrosion protection.
5. Calculations based upon a single span and designed in accordance with *AS/NZS 4600:2018 Cold Formed Steel Structures.*
6. Base track must be 1.15mm BMT (Base Metal Thickness). Stud must be fixed to base track with 10g screws on both sides.
7. Slotted Deflection Head Track (SDHT) must be 1.15mm BMT. Studs must be fixed through SDHT slots with 10g wafer head screws on both sides.
8. Wind pressures determined in accordance with *AS/NZS 1170.2 Wind Actions.* Seek professional engineering advice to determine wind pressures for a specific project.
9. Contact Siniat or a structural engineer to check walls for earthquake actions or any imposed ceiling loads during an earthquake. Specific project information is required.
9. The nominated lateral pressures and deflection limits must be checked for suitability for a specific project.

Nogging Table

Wall Height (mm)	No. of Noggings evenly spaced
0 - 3000	1
3001 - 3300	2

1. Brick Veneer construction requires noggings at 1200mm max centres.

Anchor Demand

1. Anchor Shear (kN) demand = Wu (kPa) x Stud Spacing (m) x Wall Height (m) x 0.5
2. Anchors at maximum 1.5 x stud spacing up to 600mm maximum, and also 100mm maximum from ends.

Non-Load Bearing External Steel Stud Wall

Chart 4 Stud Spacing - REGION B - HEIGHT/360 - Rendered or Tiled CFC / AAC / Brick Veneer

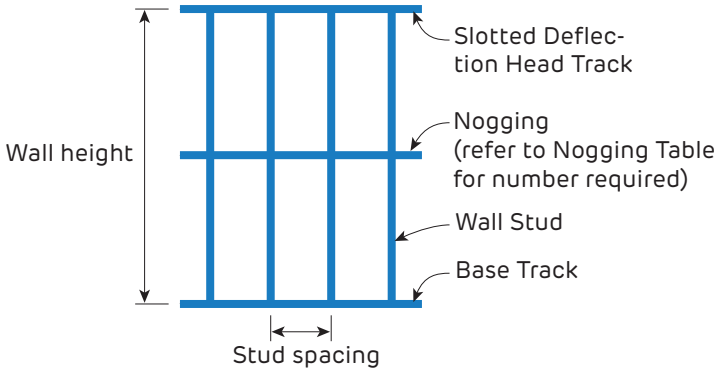

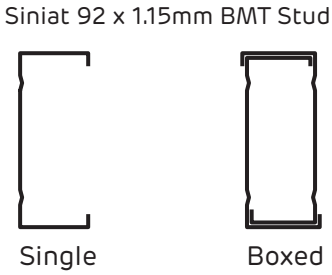

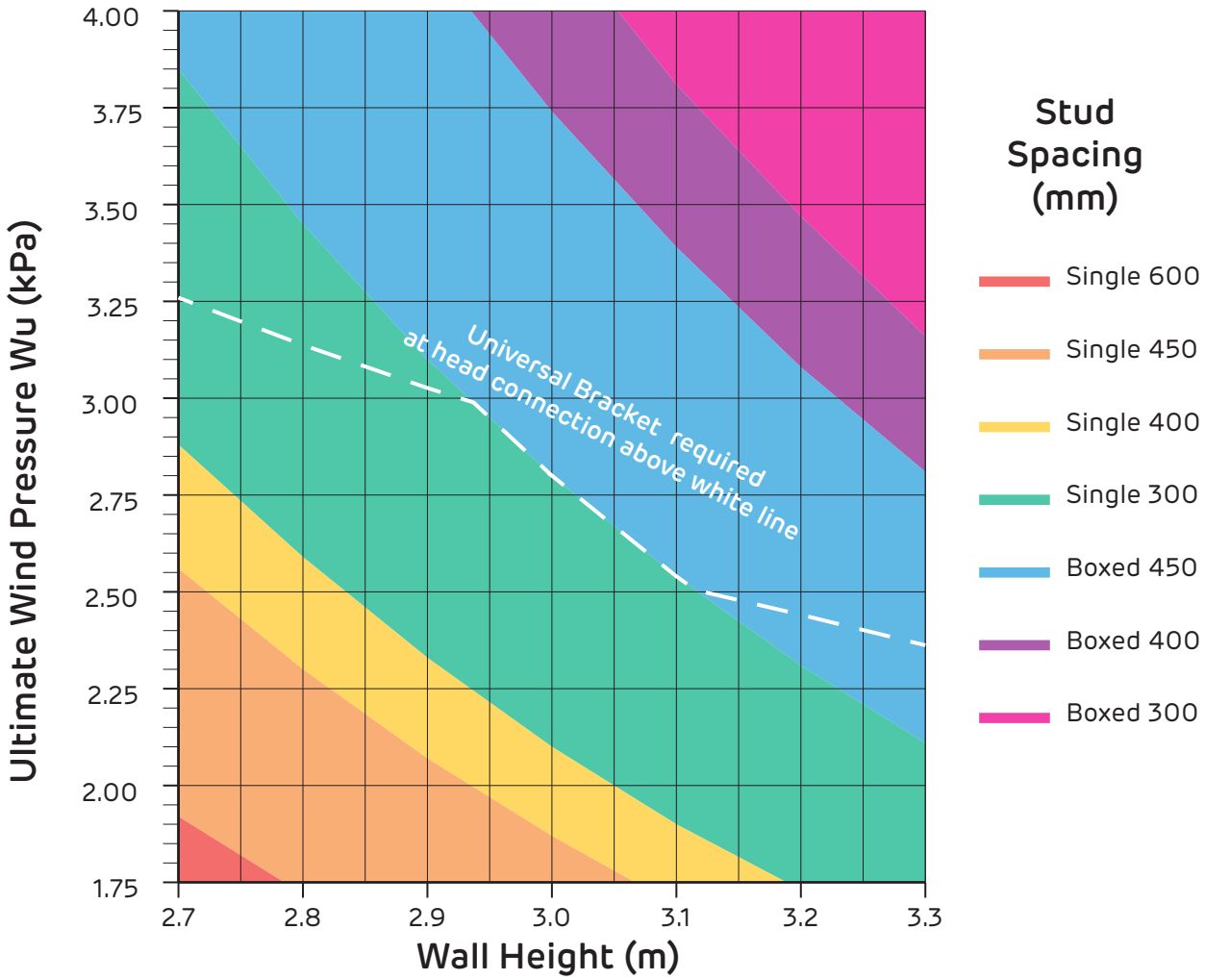

NOTES

1. Table based upon evenly distributed lateral pressures and the deflection limit stated. A sufficient number of cladding battens/top-hats, or brick-ties must be installed to provide an even distribution of lateral load to the stud framing.
2. Serviceability wind pressure (Ws) taken as 47% of ultimate which is suitable for buildings of Importance Level 2 to 4.
3. Table includes self weight and cladding weight up to 25 kg/m^2 only. Heavier outer linings like Masonry and AAC panels must be supported at wall base. Table not applicable to axially loaded (load bearing) studs or bracing shear walls. Point loads and other loads such as shelf loads or live loads are not considered.
4. Table refers to Siniat Steel Studs of grade G300 steel with Zincalume™ AM150 corrosion protection.
5. Calculations based upon a single span and designed in accordance with *AS/NZS 4600:2018 Cold Formed Steel Structures.*
6. Base track must be 1.15mm BMT (Base Metal Thickness). Stud must be fixed to base track with 10g screws on both sides.
7. Slotted Deflection Head Track (SDHT) must be 1.15mm BMT. Studs must be fixed through SDHT slots with 10g wafer head screws on both sides.
8. Wind pressures determined in accordance with *AS/NZS 1170.2 Wind Actions.* Seek professional engineering advice to determine wind pressures for a specific project.
9. Contact Siniat or a structural engineer to check walls for earthquake actions or any imposed ceiling loads during an earthquake. Specific project information is required.
9. The nominated lateral pressures and deflection limits must be checked for suitability for a specific project.

Nogging Table

Wall Height (mm)	No. of Noggings evenly spaced
0 - 3000	1
3001 - 3300	2

1. Brick Veneer construction requires noggings at 1200mm max centres.

Anchor Demand

1. Anchor Shear (kN) demand = Wu (kPa) x Stud Spacing (m) x Wall Height (m) x 0.5
2. Anchors at maximum 1.5 x stud spacing up to 600mm maximum, and also 100mm maximum from ends.

Non-Load Bearing External Steel Stud Wall

Chart 5 Stud Spacing - REGION A - HEIGHT/240 - Expressed Jointed CFC / Metal Cladding

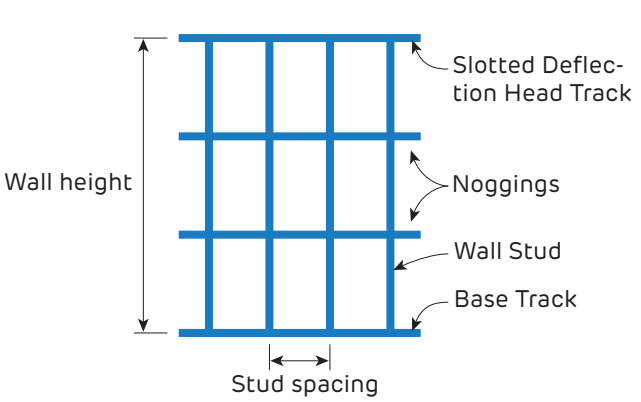

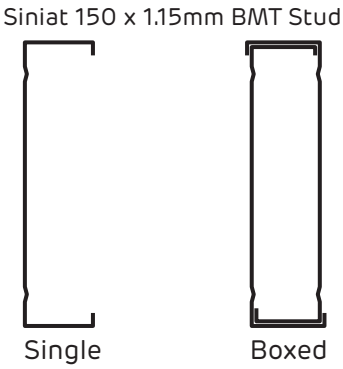

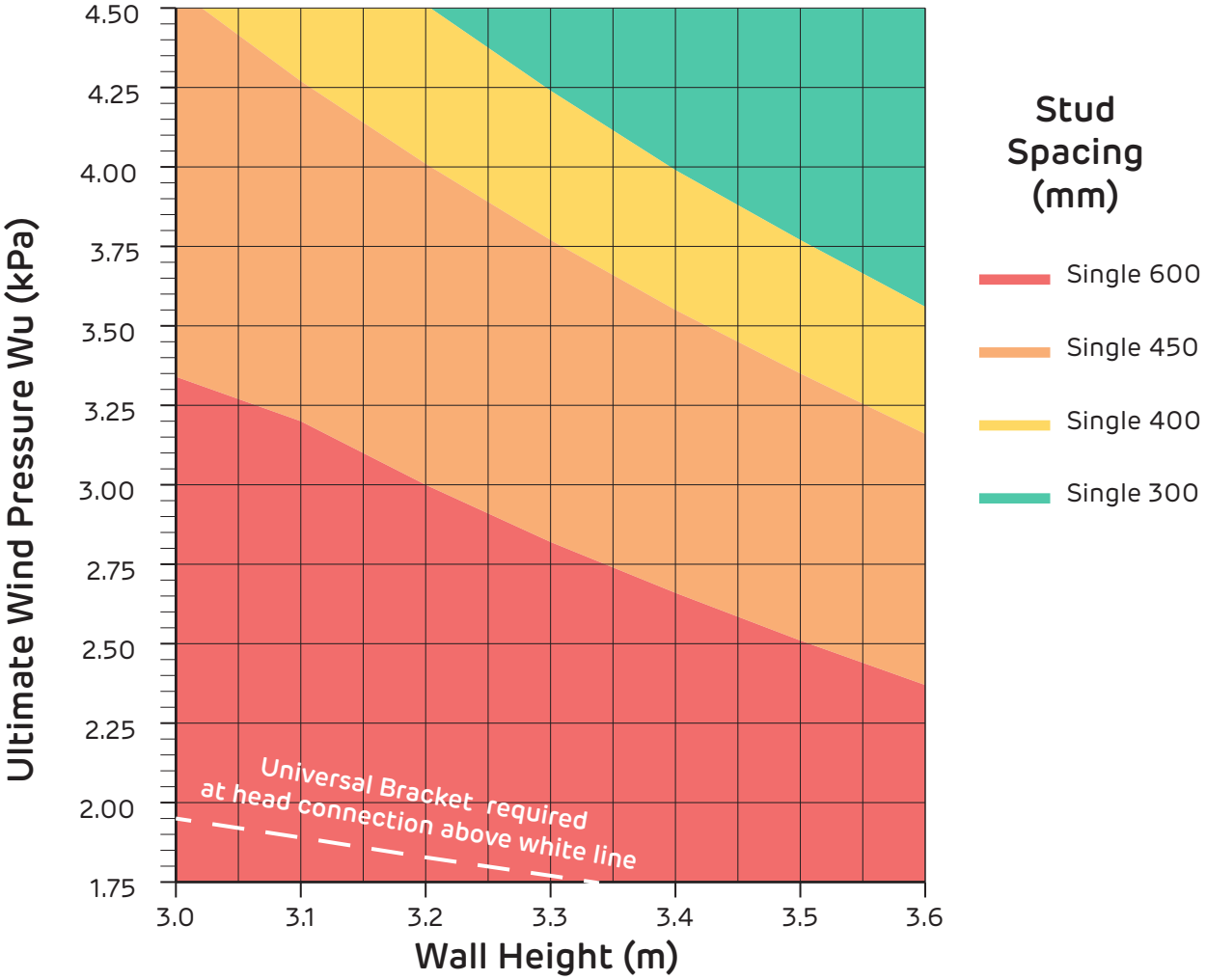

NOTES

1. Table based upon evenly distributed lateral pressures and the deflection limit stated. A sufficient number of cladding battens/top-hats, or brick-ties must be installed to provide an even distribution of lateral load to the stud framing.
2. Serviceability wind pressure (Ws) taken as 67% of ultimate which is suitable for buildings of Importance Level 2 to 4.
3. Table includes self weight and cladding weight up to 25 kg/m^2 only. Heavier outer linings like Masonry and AAC panels must be supported at wall base. Table not applicable to axially loaded (load bearing) studs or bracing shear walls. Point loads and other loads such as shelf loads or live loads are not considered.
4. Table refers to Siniat Steel Studs of grade G300 steel with Zincalume™ AM150 corrosion protection.
5. Calculations based upon a single span and designed in accordance with *AS/NZS 4600:2018 Cold Formed Steel Structures.*
6. Base track must be 1.15mm BMT (Base Metal Thickness). Stud must be fixed to base track with 10g screws on both sides.
7. Slotted Deflection Head Track (SDHT) must be 1.15mm BMT. Studs must be fixed through SDHT slots with 10g wafer head screws on both sides.
8. Wind pressures determined in accordance with *AS/NZS 1170.2 Wind Actions.* Seek professional engineering advice to determine wind pressures for a specific project.
9. Contact Siniat or a structural engineer to check walls for earthquake actions or any imposed ceiling loads during an earthquake. Specific project information is required.
9. The nominated lateral pressures and deflection limits must be checked for suitability for a specific project.

Nogging Table

Wall Height (mm)	No. of Noggings evenly spaced
3001 - 3600	2

1. Brick Veneer construction requires noggings at 1200mm max centres.

Anchor Demand

1. Anchor Shear (kN) demand = Wu (kPa) x Stud Spacing (m) x Wall Height (m) x 0.5
2. Anchors at maximum 1.5 x stud spacing up to 600mm maximum, and also 100mm maximum from ends.

Non-Load Bearing External Steel Stud Wall

Chart 6 Stud Spacing - REGION A - HEIGHT/360 - Rendered or Tiled CFC / AAC / Brick Veneer

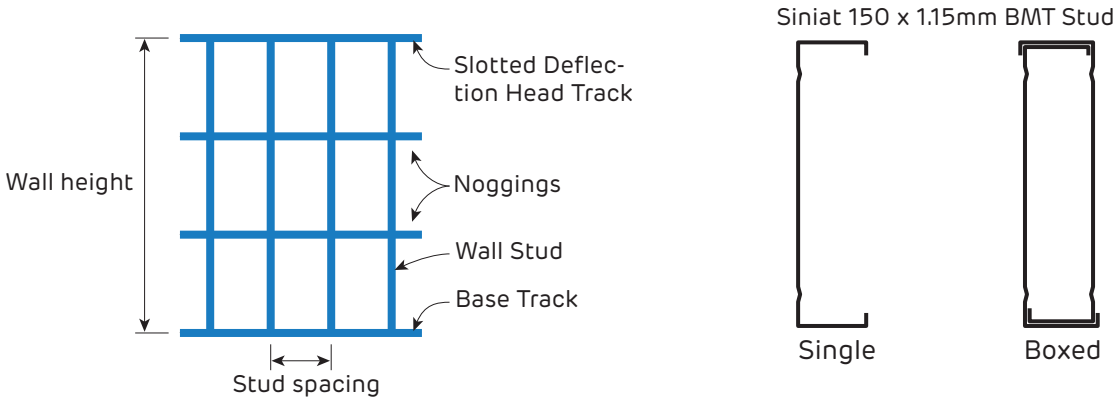

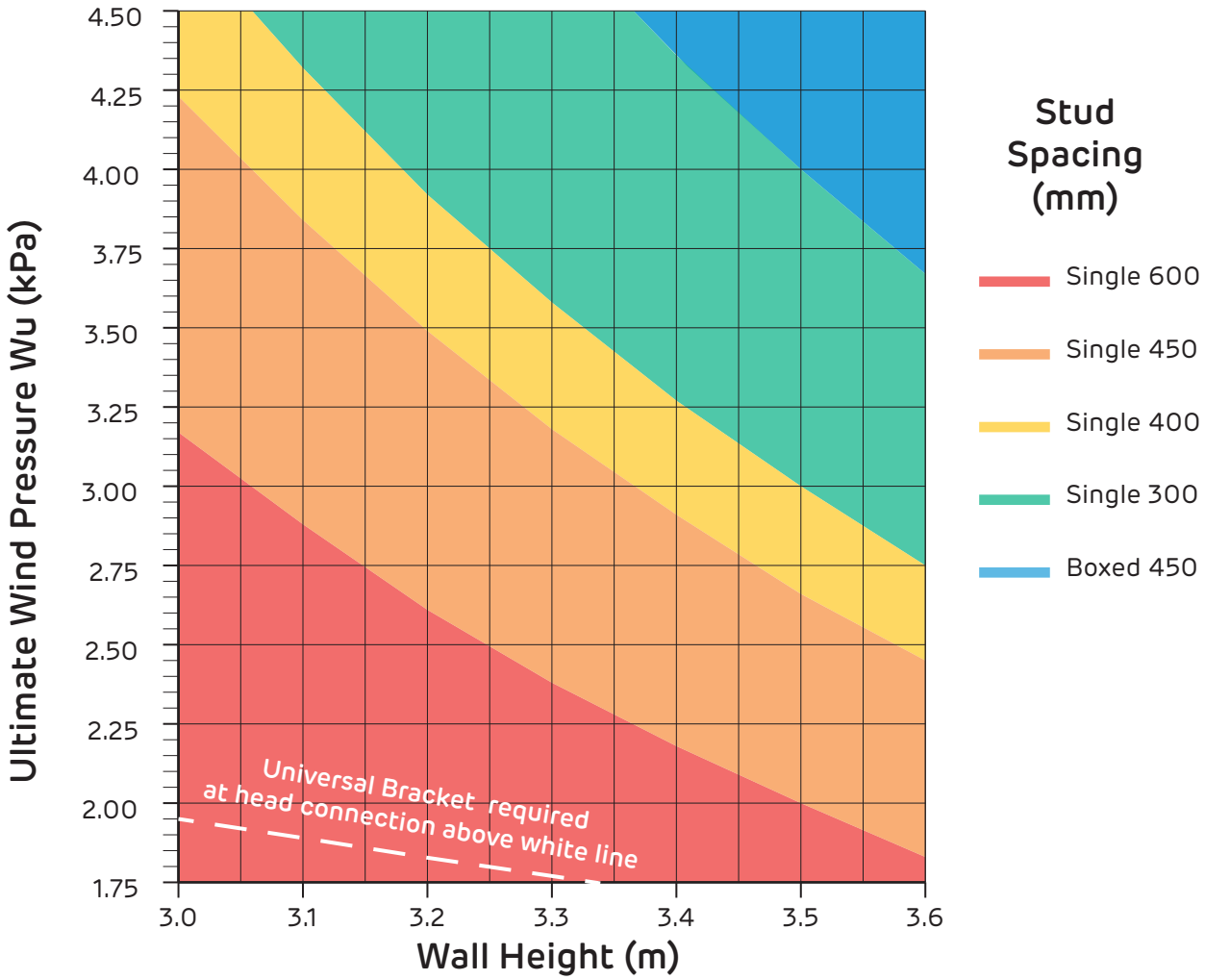

NOTES

1. Table based upon evenly distributed lateral pressures and the deflection limit stated. A sufficient number of cladding battens/top-hats, or brick-ties must be installed to provide an even distribution of lateral load to the stud framing.
2. Serviceability wind pressure (Ws) taken as 67% of ultimate which is suitable for buildings of Importance Level 2 to 4.
3. Table includes self weight and cladding weight up to 25 kg/m^2 only. Heavier outer linings like Masonry and AAC panels must be supported at wall base. Table not applicable to axially loaded (load bearing) studs or bracing shear walls. Point loads and other loads such as shelf loads or live loads are not considered.
4. Table refers to Siniat Steel Studs of grade G300 steel with Zincalume™ AM150 corrosion protection.
5. Calculations based upon a single span and designed in accordance with *AS/NZS 4600:2018 Cold Formed Steel Structures.*
6. Base track must be 1.15mm BMT (Base Metal Thickness). Stud must be fixed to base track with 10g screws on both sides.
7. Slotted Deflection Head Track (SDHT) must be 1.15mm BMT. Studs must be fixed through SDHT slots with 10g wafer head screws on both sides.
8. Wind pressures determined in accordance with *AS/NZS 1170.2 Wind Actions.* Seek professional engineering advice to determine wind pressures for a specific project.
9. Contact Siniat or a structural engineer to check walls for earthquake actions or any imposed ceiling loads during an earthquake. Specific project information is required.
9. The nominated lateral pressures and deflection limits must be checked for suitability for a specific project.

Nogging Table

Wall Height (mm)	No. of Noggings evenly spaced
3001 - 3600	2

1. Brick Veneer construction requires noggings at 1200mm max centres.

Anchor Demand

1. Anchor Shear (kN) demand = Wu (kPa) x Stud Spacing (m) x Wall Height (m) x 0.5
2. Anchors at maximum 1.5 x stud spacing up to 600mm maximum, and also 100mm maximum from ends.

Non-Load Bearing External Steel Stud Wall

Chart 7 Stud Spacing - REGION B - HEIGHT/240 and HEIGHT/360

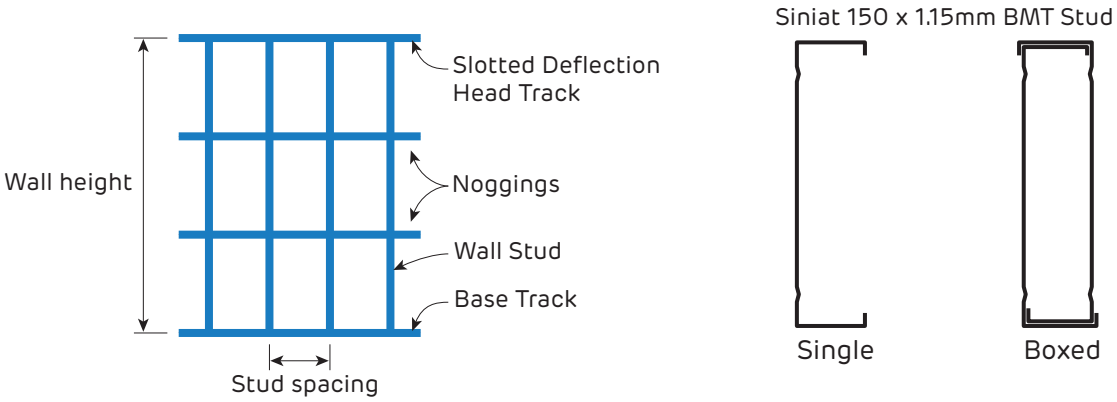

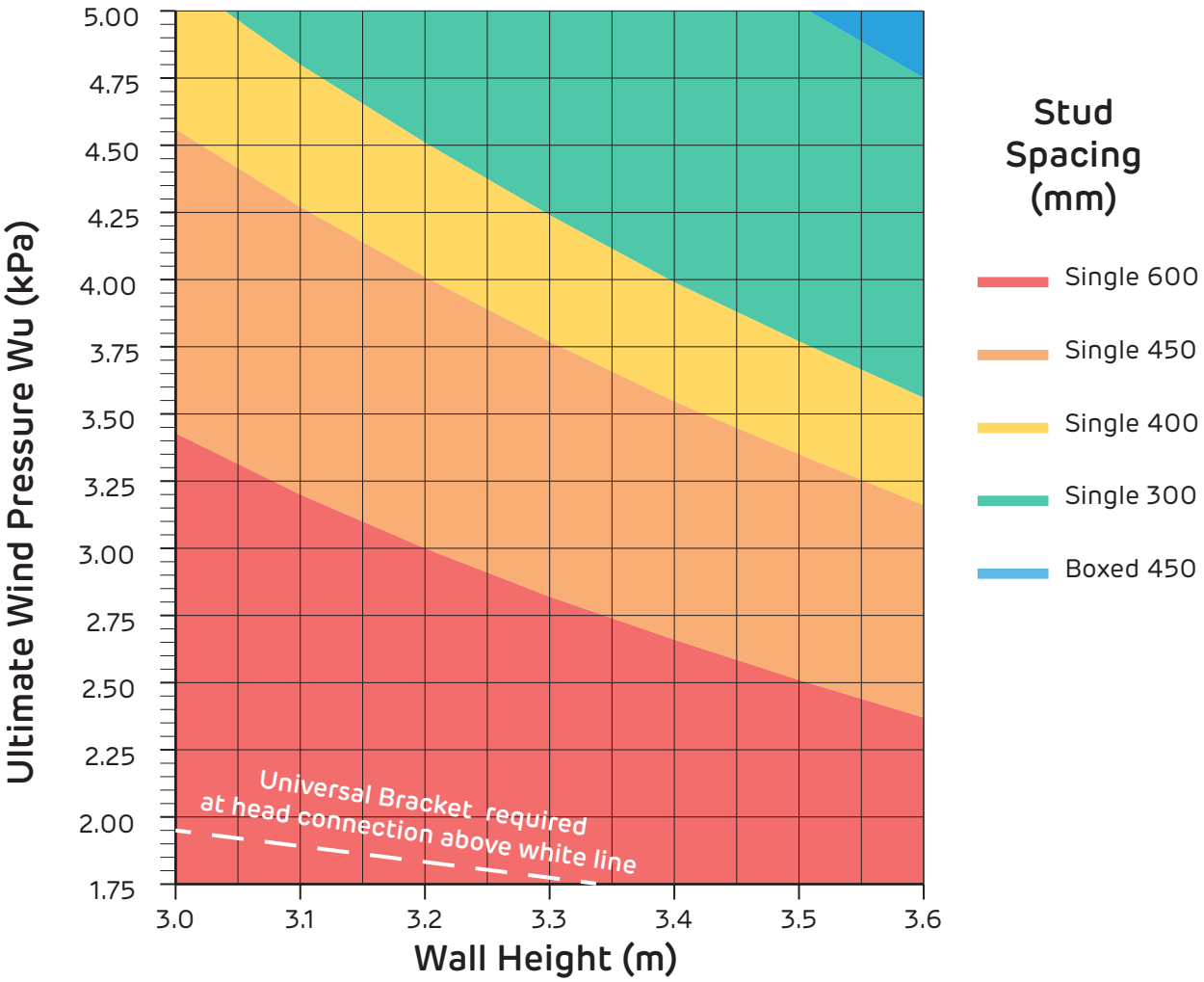

NOTES

1. Table based upon evenly distributed lateral pressures and the deflection limit stated. A sufficient number of cladding battens/top-hats, or brick-ties must be installed to provide an even distribution of lateral load to the stud framing.
2. Serviceability wind pressure (Ws) taken as 47% of ultimate which is suitable for buildings of Importance Level 2 to 4.
3. Table includes self weight and cladding weight up to 25 kg/m^2 only. Heavier outer linings like Masonry and AAC panels must be supported at wall base. Table not applicable to axially loaded (load bearing) studs or bracing shear walls. Point loads and other loads such as shelf loads or live loads are not considered.
4. Table refers to Siniat Steel Studs of grade G300 steel with Zincalume™ AM150 corrosion protection.
5. Calculations based upon a single span and designed in accordance with *AS/NZS 4600:2018 Cold Formed Steel Structures.*
6. Base track must be 1.15mm BMT (Base Metal Thickness). Stud must be fixed to base track with 10g screws on both sides.
7. Slotted Deflection Head Track (SDHT) must be 1.15mm BMT. Studs must be fixed through SDHT slots with 10g wafer head screws on both sides.
8. Wind pressures determined in accordance with *AS/NZS 1170.2 Wind Actions.* Seek professional engineering advice to determine wind pressures for a specific project.
9. Contact Siniat or a structural engineer to check walls for earthquake actions or any imposed ceiling loads during an earthquake. Specific project information is required.
9. The nominated lateral pressures and deflection limits must be checked for suitability for a specific project.

Nogging Table

Wall Height (mm)	No. of Noggings evenly spaced
3001 - 3600	2

1. Brick Veneer construction requires noggings at 1200mm max centres.

Anchor Demand

1. Anchor Shear (kN) demand = Wu (kPa) x Stud Spacing (m) x Wall Height (m) x 0.5
2. Anchors at maximum 1.5 x stud spacing up to 600mm maximum, and also 100mm maximum from ends.

Steel Profile Information

Material

Manufacturer	Grade	Ultimate	Yield	Coating
Siniat	G300	340 MPa	300 MPa	AM150

1. Steel grade and coating in accordance with AS 1397 *Continuous hot-dip metallic coated steel sheet and strip*

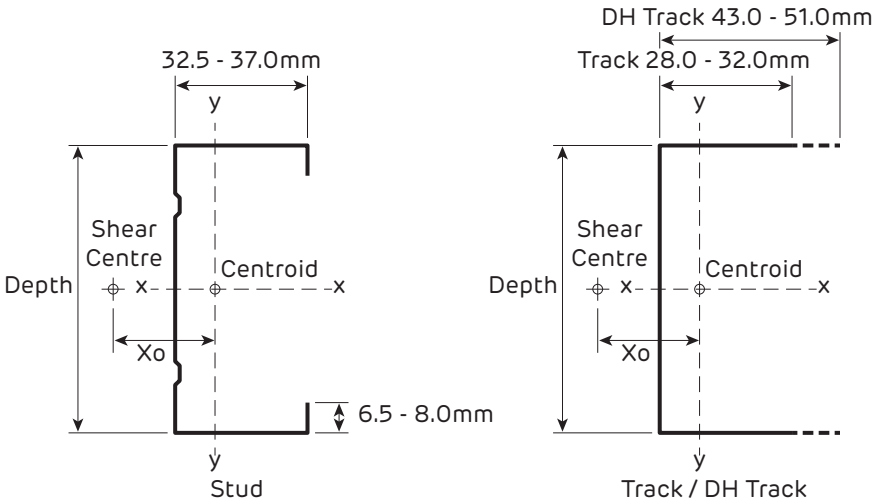

Section Properties

Profile	Dimensions (mm)		Shear Centre from Centroid (mm)	Area (mm^2)	Moment of Inertia (mm^4)		Section Modulus (mm^3)		Torsion Constant J (mm^4)	Warping Constant Iw (mm^6)
	Depth	BMT	Xo		Ixx	Iyy	Zxx	Zyy		
Stud	92	1.15	-24.7	194.7	251,300	30,770	5,548	1,199	85.8	48,940,000
	150	1.15	-20.0	262.1	808,500	35,850	10,880	1,296	115.6	150,300,000
Track	92	1.15	-15.6	172.6	220,300	13,780	4,714	583	76.1	21,050,000
	150	1.15	-12.9	241.5	718,500	16,890	9,491	649	106.5	71,610,000
DH Track	92	1.15	-30.7	215.3	314,200	51,950	6,714	1,457	94.9	78,040,000
	150	1.15	-25.4	280.8	937,400	59,520	12,450	1,546	123.8	238,600,000

Plasterboard Layout

	Non-fire Rated	Fire Rated
For single layer systems, vertical joints must be 200mm minimum from the edge of any opening such as windows and doorways to minimise cracking at the joints.	✓	✓
Horizontal Layout		
Stagger butt joints in single layer systems by 300mm minimum on adjoining sheets and on opposite sides of the wall.	✓	✓
Stagger butt joints in multilayer systems by 300mm minimum on adjoining sheets and between layers.	✓	✓
First layer butt joints must be backed by a stud or back-blocked. Refer to installation diagrams.	✓	✓
Stagger recessed edges by 300mm minimum between layers.	✓	✓
Stagger recessed edges in single layer systems by 300mm minimum on opposite sides of the wall or alternatively, back by a nogging.		✓
Vertical Layout		
Stagger butt joints in single layer systems by 300mm minimum on adjoining sheets and on opposite sides of the wall.	✓	✓
Stagger butt joints by 300mm minimum on adjoining sheets and between layers.	✓	✓
First layer butt joints must be backed by a nogging or back-blocked.	✓	
First layer butt joints must be backed by a nogging.		✓
Stagger recessed edges by 300mm minimum between layers.	✓	✓
Stagger recessed edges by 300mm minimum on opposite sides of the wall for single layer systems	✓	✓

- Install plasterboard sheets horizontally when practical to minimise stud twisting and reduce the effect of glancing light.
- Minimise butt joints by using long sheets.

Plasterboard Fixing

	Non-fire Rated	Fire Rated
Drive screws to just below the sheet surface, taking care not to break the paper linerboard. For over-driven screws, install another screw 20mm away. Leave or remove the over-driven screw and patch.	✓	✓
Laminating screws can be used to fix butt joints in the second and third layer.	✓	✓
Screw and Adhesive Method		
Apply masta**grip** Stud Adhesive after the frame is clean, dry, and free from grease, dust and other contaminants.	✓	
Apply masta**grip** daubs 200mm minimum from screws and plasterboard edges.	✓	
Screw Only Method		
Use the 'Screw Only Method' in tiled or fire rated areas. Stud adhesive is not permitted.	✓	✓

The 'Screw and Adhesive Method' is recommended for non-fire rated applications. masta**grip** will:

- Minimise screw popping
- Reduce the number of screw heads that may show in glancing light
- Assist in compensating for frame irregularities.

Screw Type and Minimum Size for the Installation of Plasterboard to Steel

Plasterboard Thickness	1st Layer	2nd Layer	3rd Layer
10mm	6g x 25mm screw	6g x 41mm screw *	-
13mm	6g x 25mm screw	6g x 41mm screw *	7g x 57mm screw *
16mm	6g x 32mm screw	6g x 45mm screw *	8g x 65mm screw *

For steel ≤ 0.75mm BMT, use fine thread needle point screws.

For steel ≥ 0.75mm BMT, use fine thread drill point screws.

*10g x 38mm Laminating screws may be used as detailed in installation diagrams.

Exterior Cladding

	Fire Rated
The following cladding sheets or planks are not considered detrimental to the FRL of the wall: > PERMAROCK Outdoor > James Hardie™ fibre cement sheeting > Wood or timber > Steel > Aluminium > PVC > Rendered polystyrene > Cladding fixed and supported independently of the wall. For class 2 to 9 buildings, also refer to NCC Volume One Section C, CP2 Spread of fire requirements.	✓
Fix cladding or cladding top hats to the steel frame through the **multi**shield.	✓
Extend the external fire rated wall up to the non-combustible roof covering or non-combustible eaves lining. Refer to Construction Details.	✓

> Protect plasterboard sheets from the weather when installed on the exterior side of external wall framing until the moisture barrier and exterior cladding are installed.

- Exterior cladding and the moisture barrier once installed, must provide protection from the weather.
- Use construction techniques that direct condensation and rain away from plasterboard.
- Siniat recommends a drained cavity between the external cladding and the **multi**shield for weathertightness and durability.
- Top hats between external cladding and external plasterboard do not change the FRL of the system.
- Horizontal and vertical top hats are shown in system images as an option to provide a drained and vented cavity as well as meet the NCC thermal break requirements. Alternatively, use a thermal break strip with insulated value R0.2 between the steel stud framing and external cladding.

FIGURE 2 Fire Rated 1 Layer - Horizontal
Screw Only Method

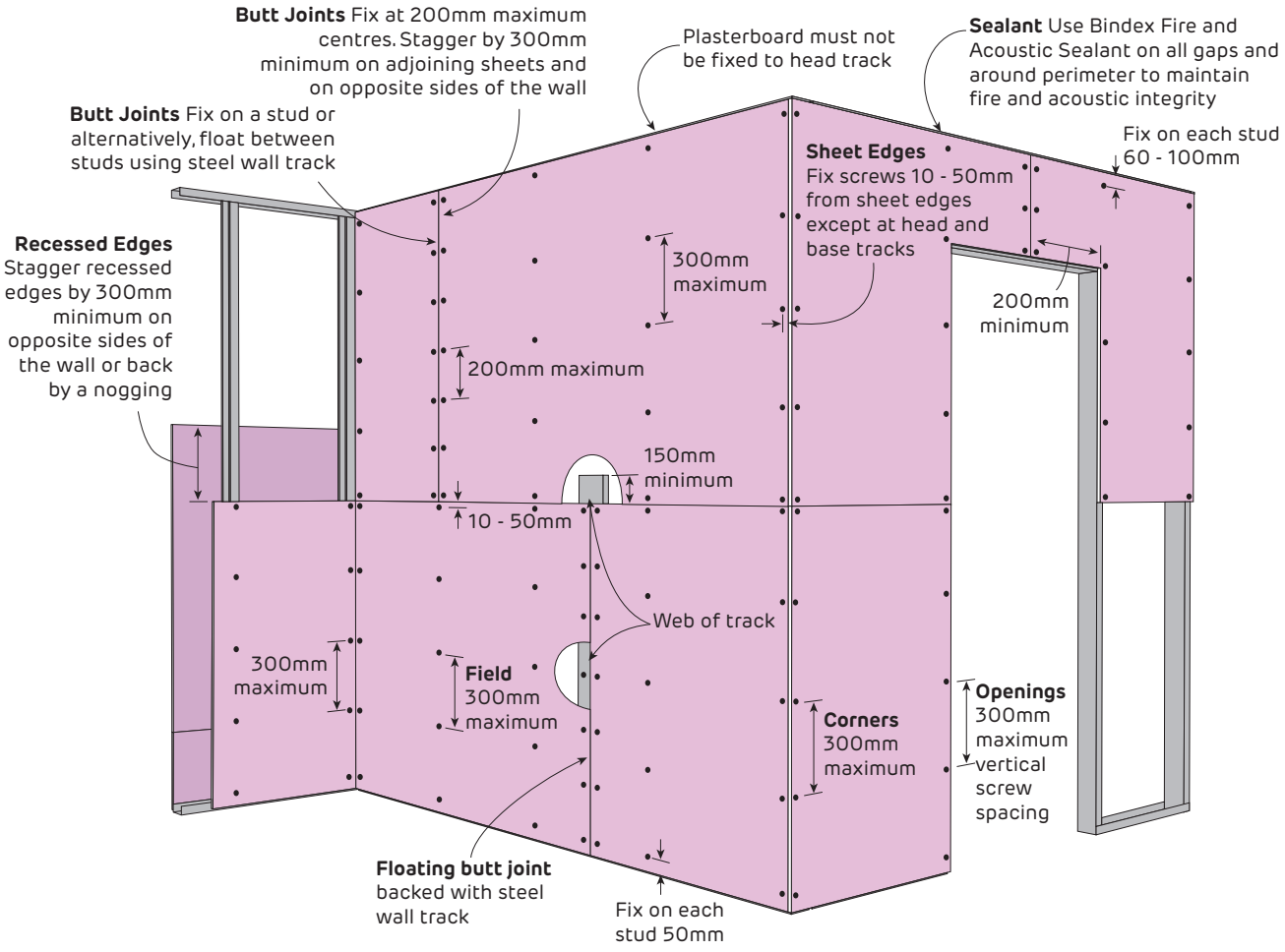

FIGURE 3 Fire Rated 2 Layers - Horizontal + Horizontal
Screw Only Method

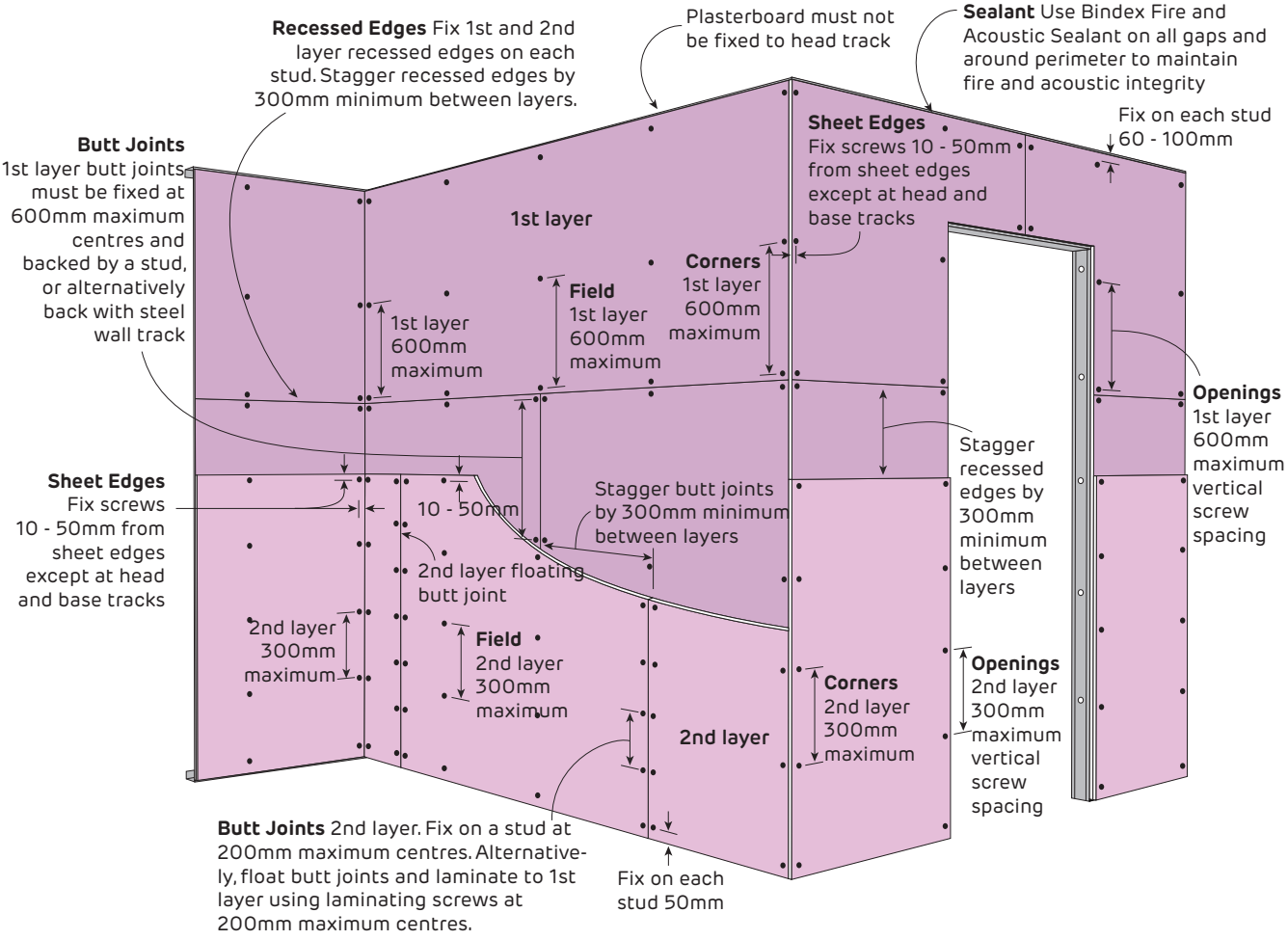

FIGURE 4 **Fire Rated 3 Layers - Horizontal + Horizontal + Horizontal**
Screw Only Method

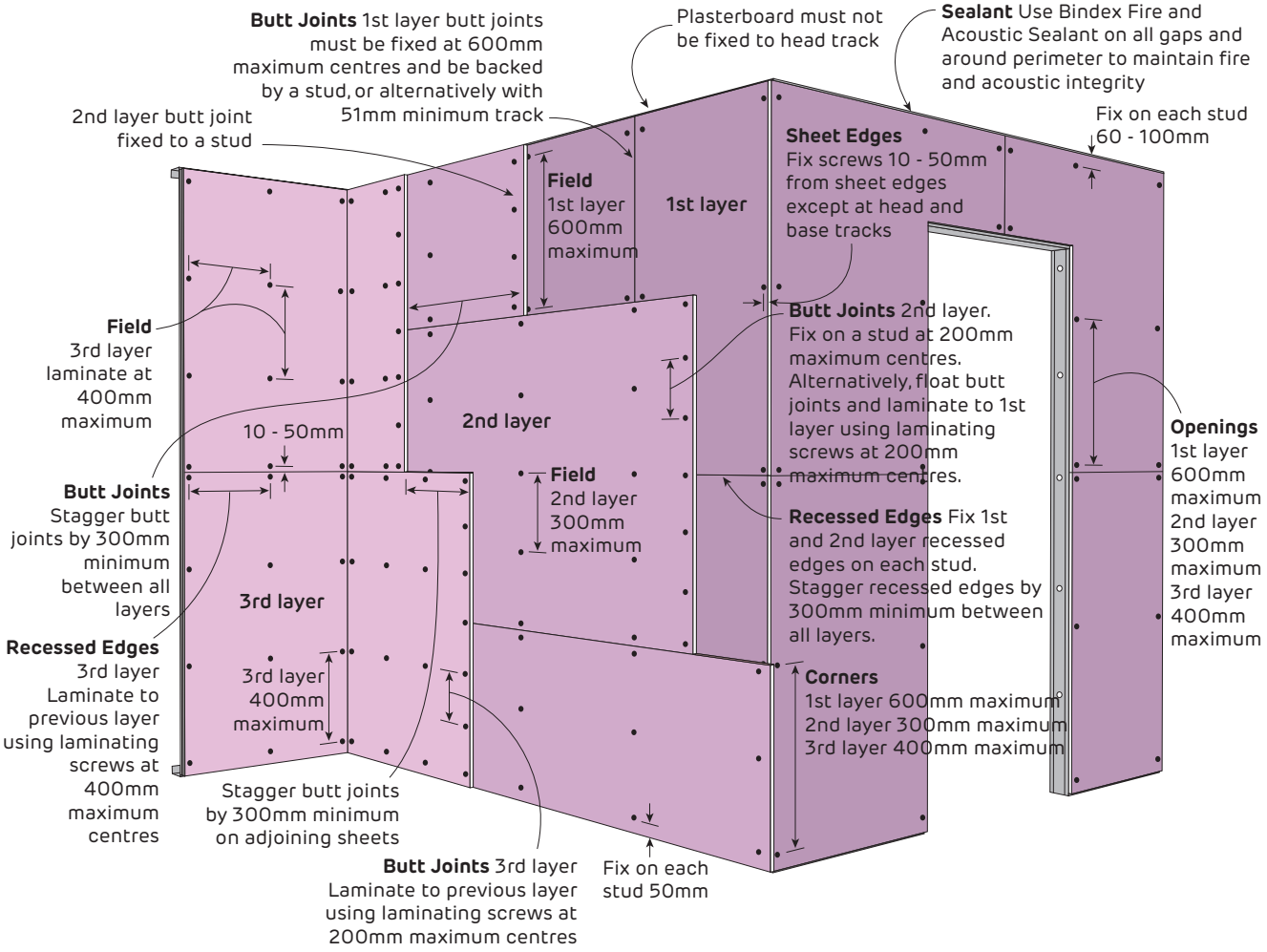

Non-Fire Rated
Head and Base Details for External Steel Stud Walls

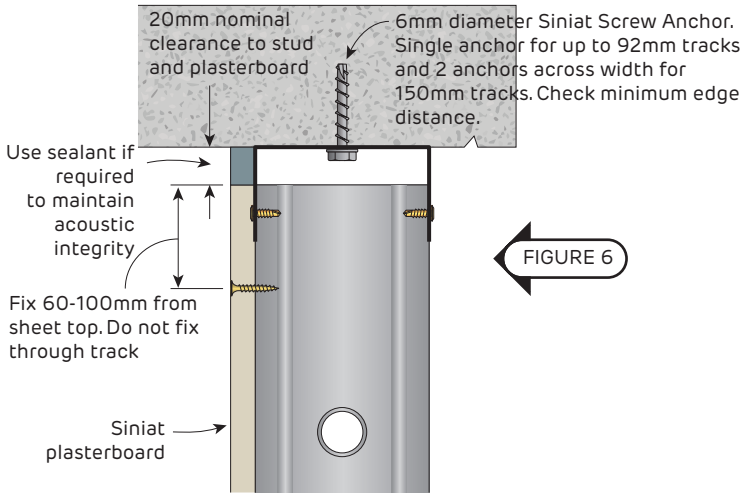

FIGURE 5 Head Connection HC2
Slotted Deflection Head Track
Section

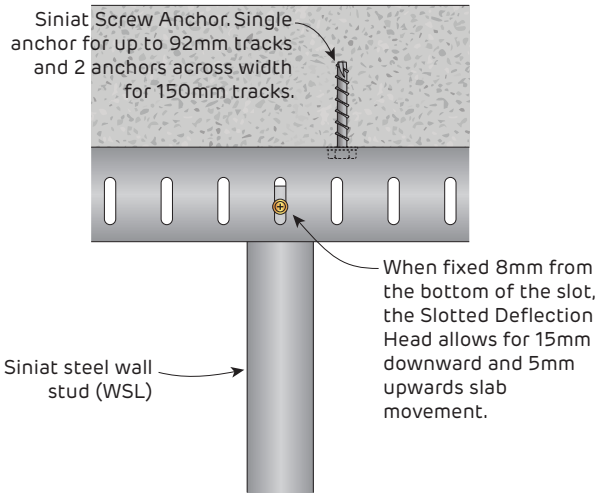

FIGURE 6 Slotted Deflection Head Connection
Elevation

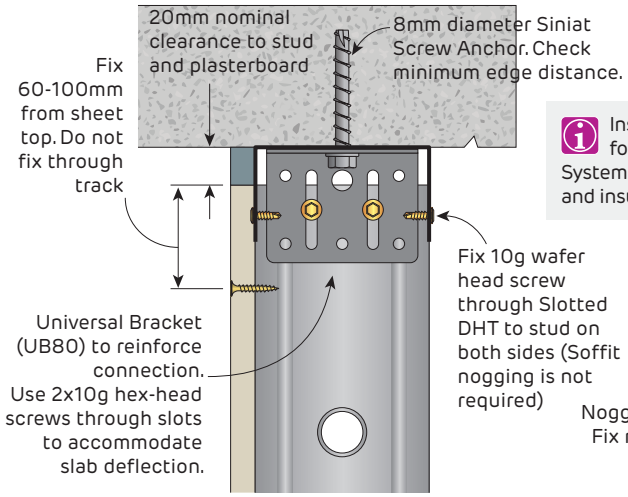

FIGURE 7 Head Connection HC4
Slotted Deflection Head Track with
Universal Bracket
Section

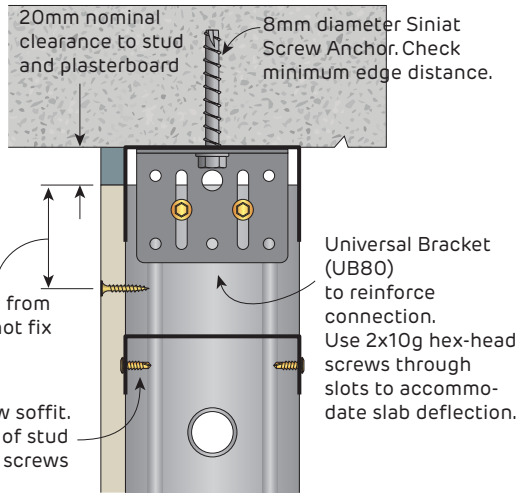

FIGURE 8 Head Connection HC3
With Universal Bracket
Section

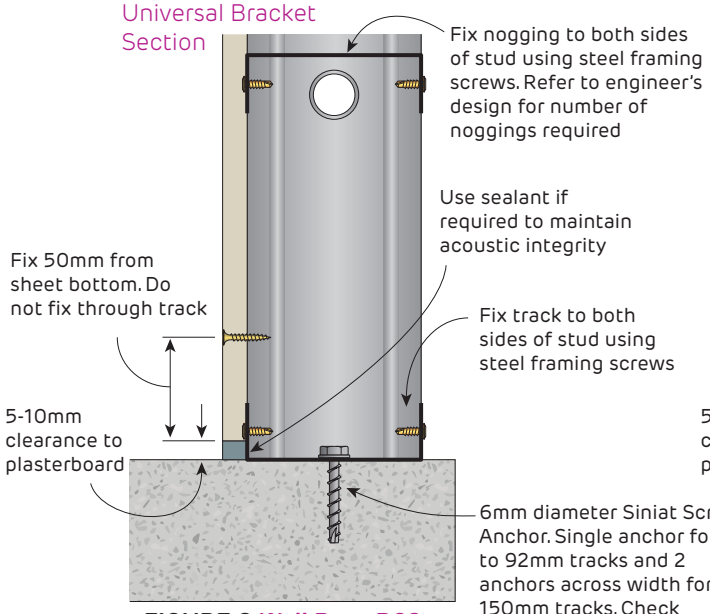

FIGURE 9 Wall Base BC2
Section

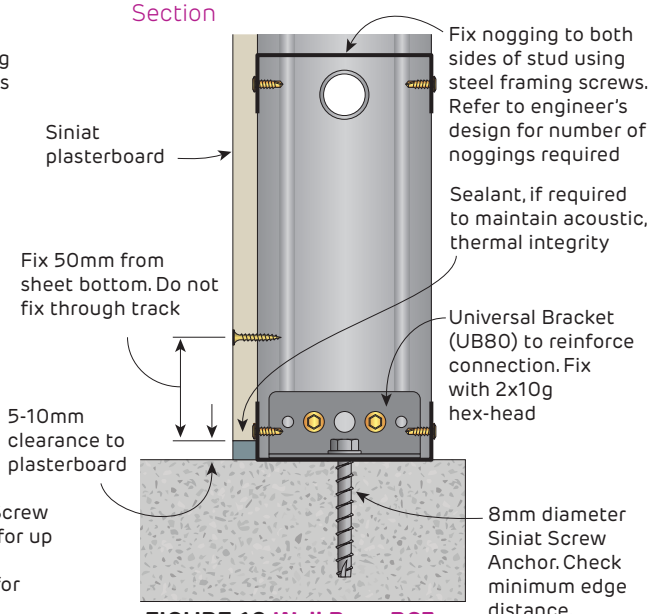

FIGURE 10 Wall Base BC3
With Universal Bracket
Section

Non-Fire Rated

Typical Head and Base Details for Non-Load Bearing External Steel Stud Walls

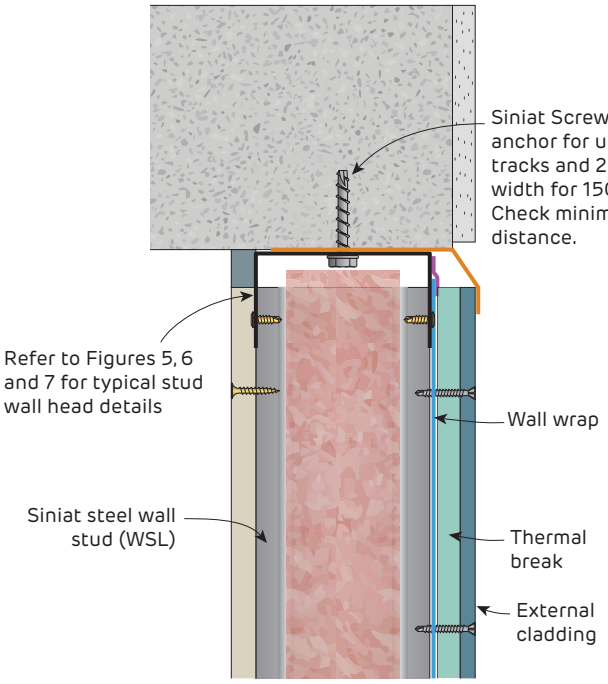

FIGURE 11 External Steel Stud Wall Head
With cladding over thermal break
Section

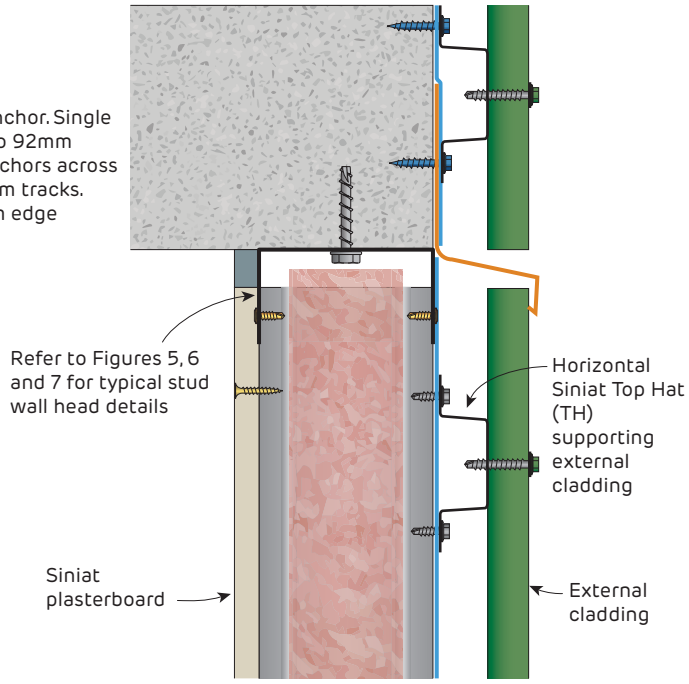

FIGURE 12 External Steel Stud Wall Head
With cladding over horizontal top-hats
Section

Non-load bearing walls are unsuitable for bracing wall applications

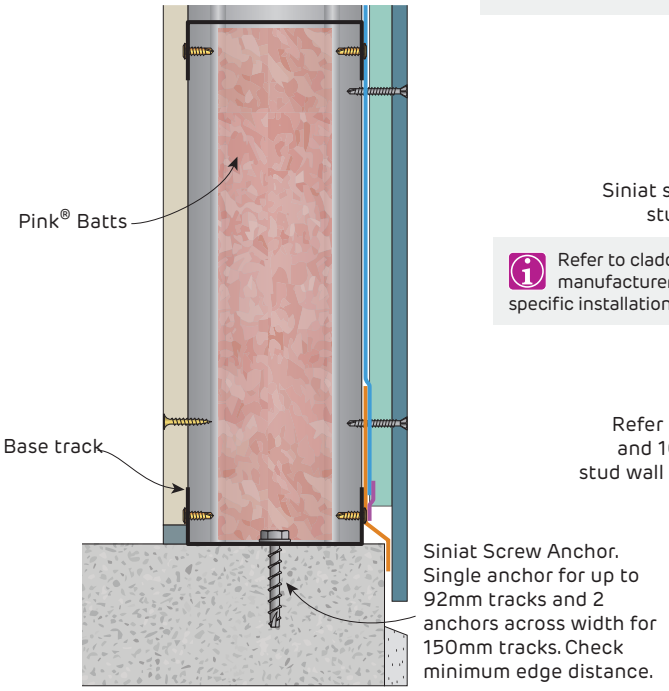

FIGURE 13 External Steel Stud Wall Base
With cladding over thermal break
Section

Top hats must not be fixed to noggings or deflection head tracks

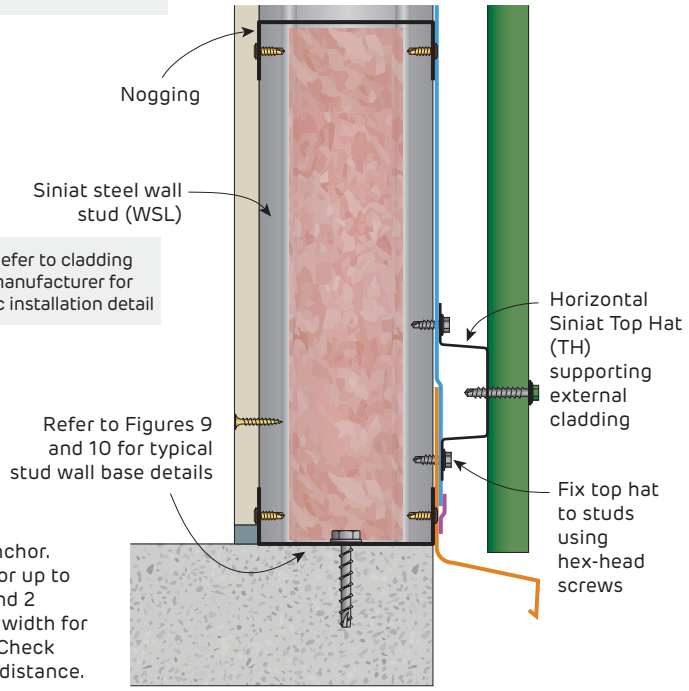

FIGURE 14 External Steel Stud Wall Base
With cladding over horizontal top-hats
Section

Non-Fire Rated

Typical Head and Base Details for Non-Load Bearing External Steel Stud Walls

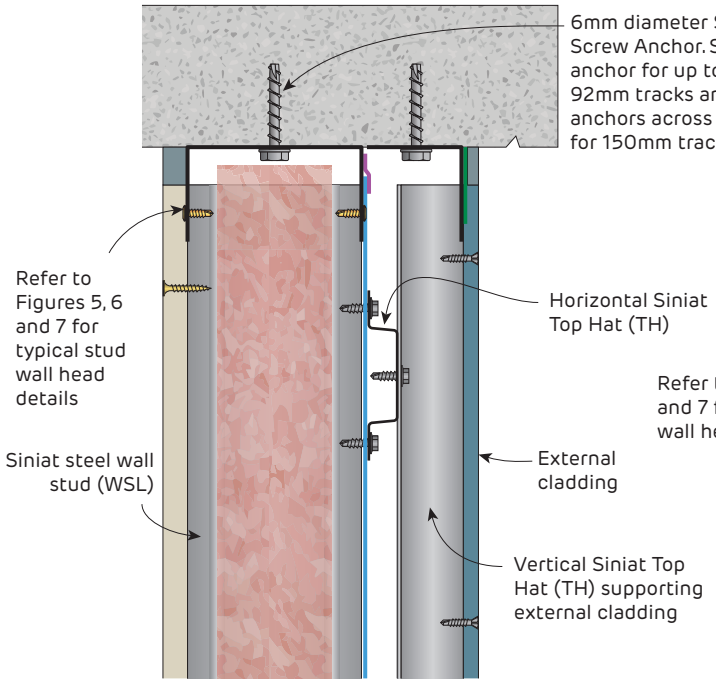

FIGURE 15 External Steel Stud Wall Head
With cladding over horizontal + vertical Top Hats
Section

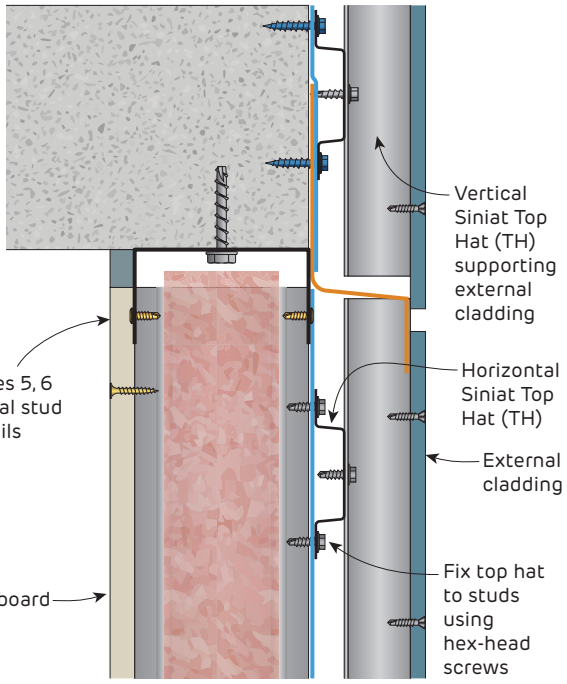

FIGURE 16 External Steel Stud Wall Head
With cladding over horizontal + vertical Top Hats
Section

Non-load bearing walls are unsuitable for bracing wall applications

Refer to cladding manufacturer for specific installation detail

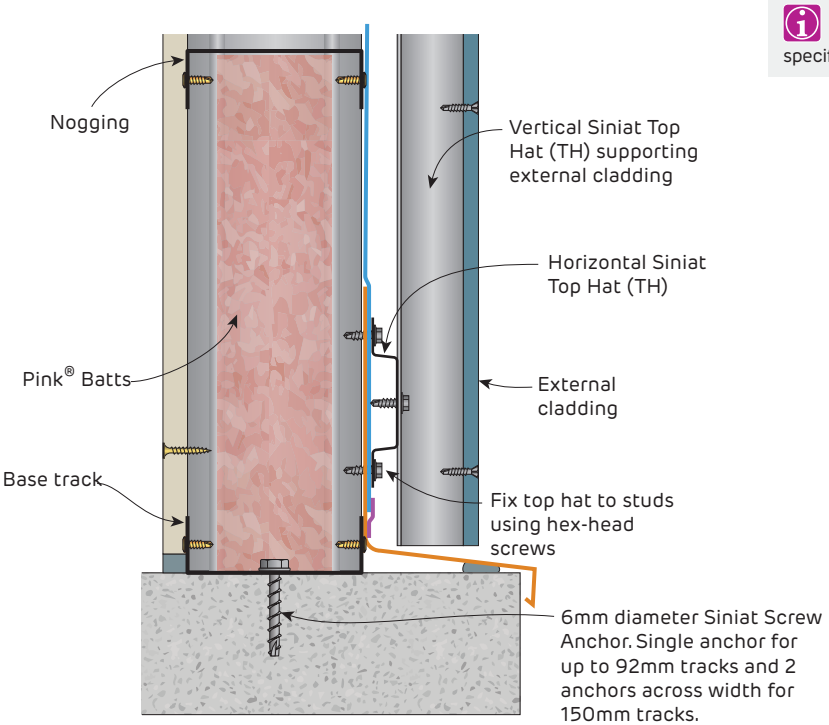

FIGURE 17 External Steel Stud Wall Base
With cladding over horizontal + vertical Top Hats
Section

Fire Rated

Typical Head and Base Details for Non-Load Bearing External Steel Stud Walls

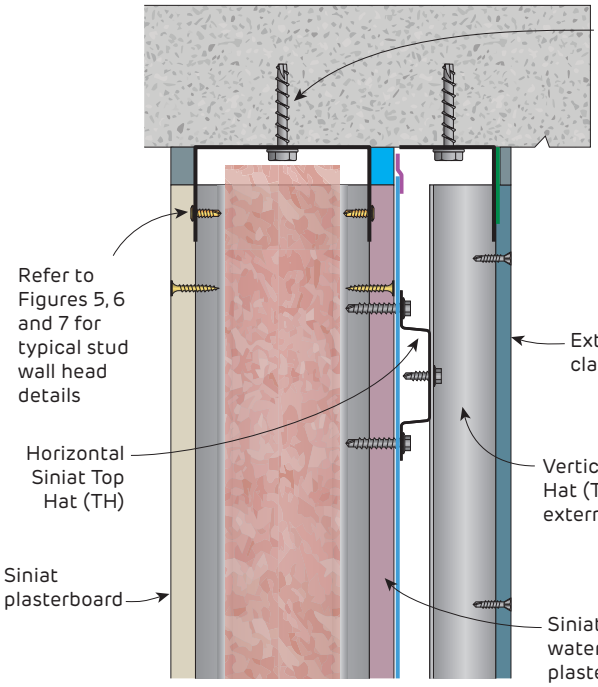

FIGURE 18 External Steel Stud Wall Head
With cladding over horizontal + vertical Top Hats
Fire rated from the outside only - Section

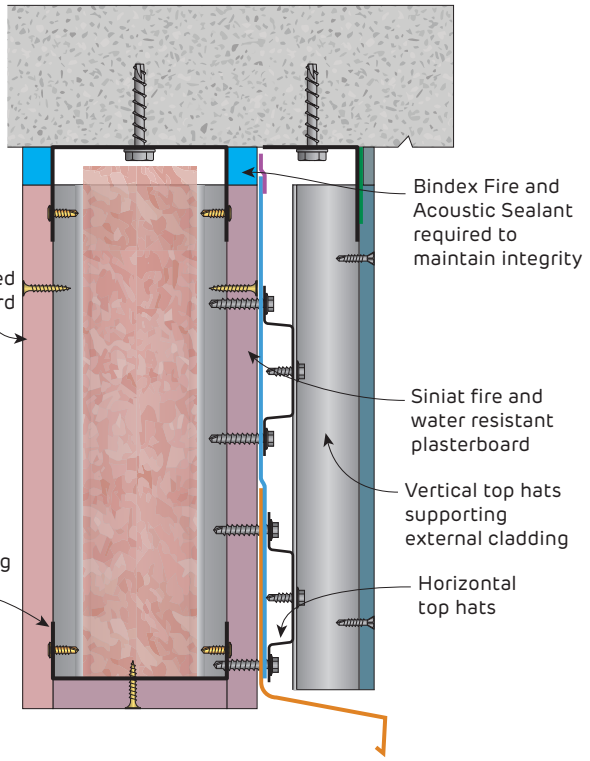

FIGURE 19 External Steel Stud Wall Head
With cladding over horizontal + vertical Top Hats
Fire rated from both directions - Section

Top Hats must not be fixed to noggings or deflection head tracks

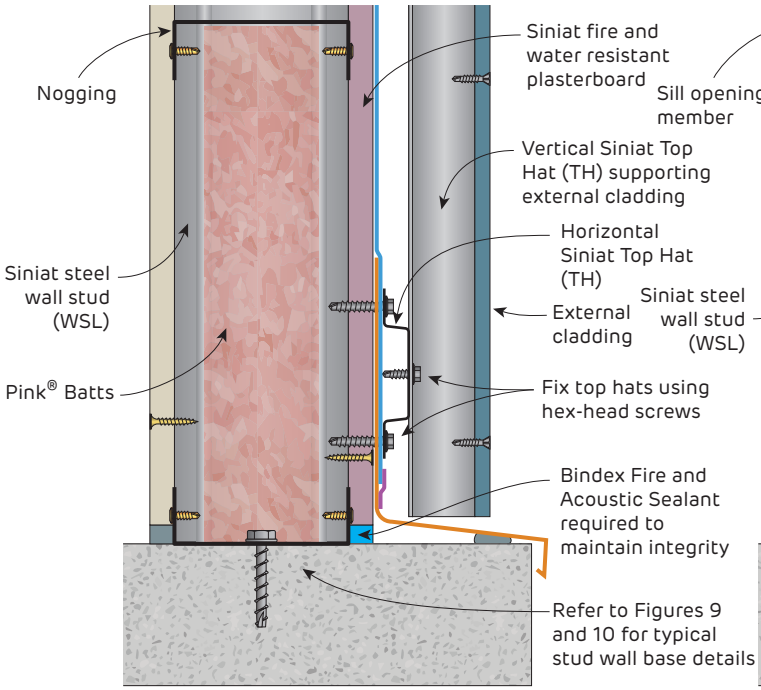

FIGURE 20 External Steel Stud Wall Base
With cladding over horizontal + vertical Top Hats
Fire rated from the outside only - Section

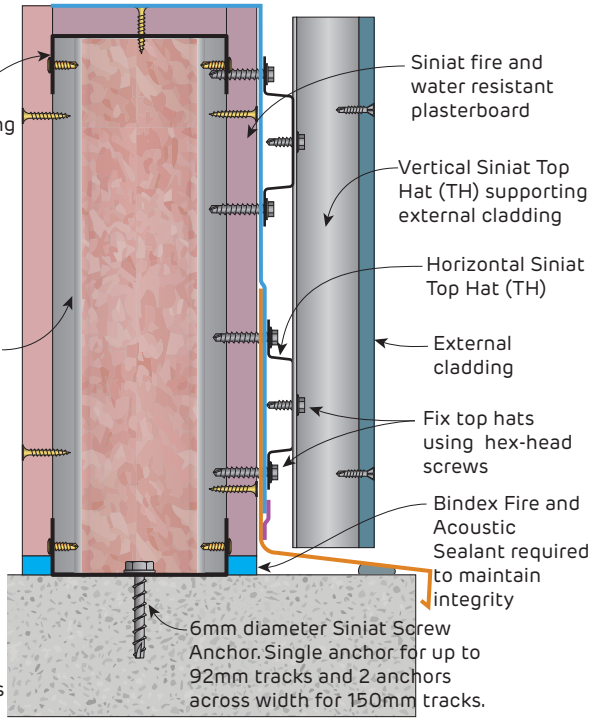

FIGURE 21 External Steel Stud Wall Base
With cladding over horizontal + vertical Top Hats
Fire rated from both directions - Section

Non-load bearing walls are unsuitable for bracing wall applications

Refer to cladding manufacturer for specific installation detail

Non-Fire Rated

Typical Head and Base Details for Non-Load Bearing External Steel Stud Walls

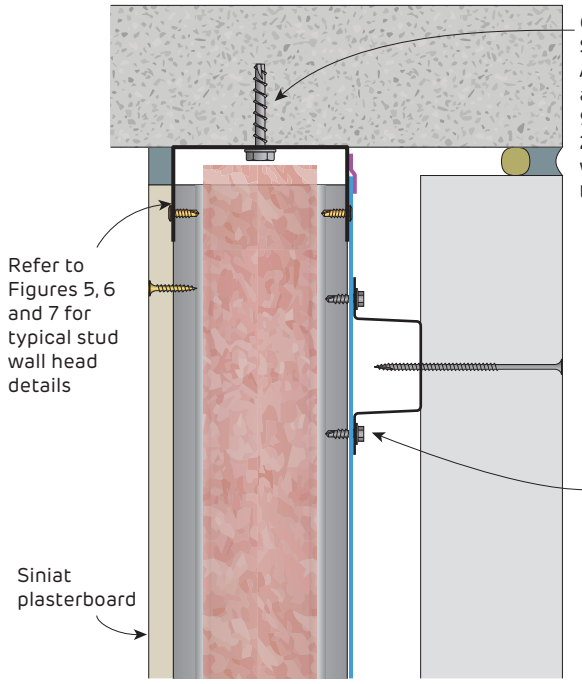

FIGURE 22 External Steel Stud Wall Head
With horizontal Top Hats under AAC
Section

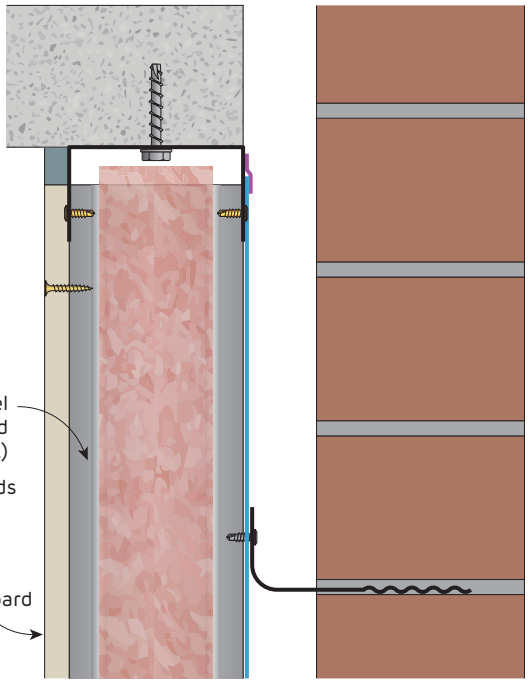

FIGURE 23 External Steel Stud Wall Head
With brick veneer
Section

Refer to cladding manufacturer for specific installation detail

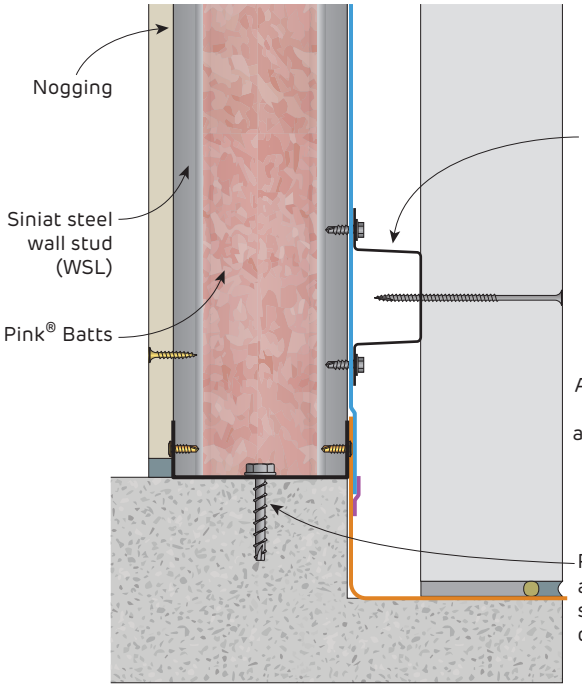

FIGURE 24 External Steel Stud Wall Base
With horizontal Top Hats under AAC
Section

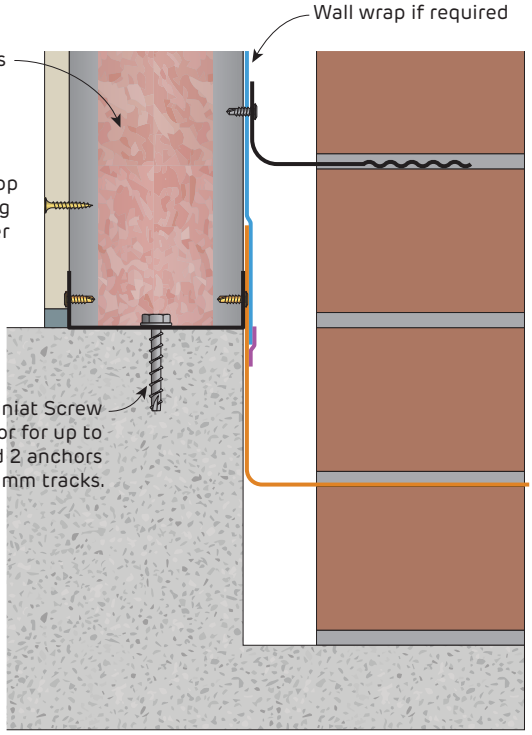

FIGURE 25 External Steel Stud Wall Base
With brick veneer
Section

Brick veneer ties must be compatible with Zincalume steel. Stainless steel brick ties and other more noble metals must be electrically isolated from the steel studs.

Fire Rated
Typical Details for Spandrel Walls

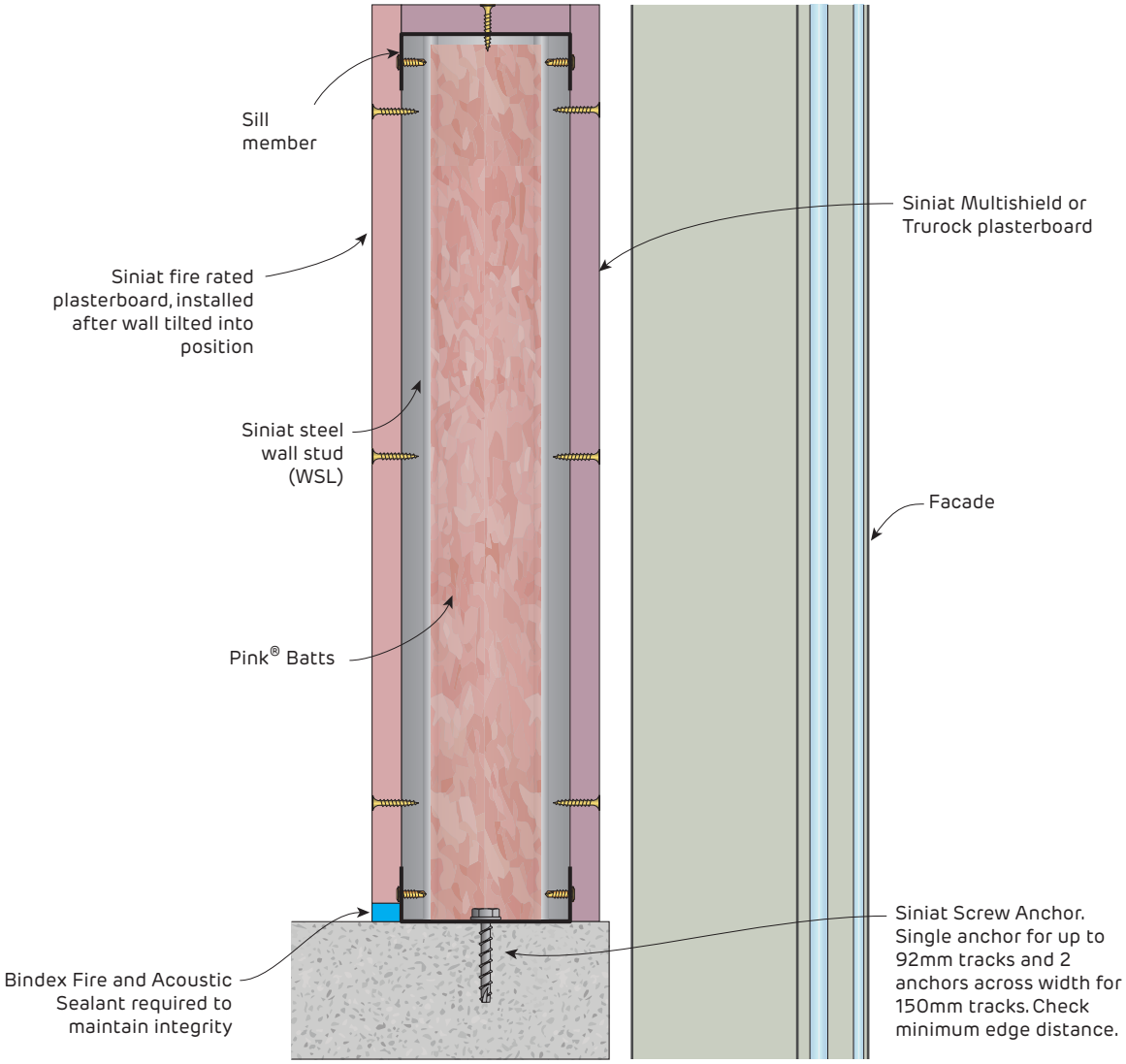

FIGURE 26 Spandrel Steel Stud Wall
Spandrel wall tilted into position near facade
Section

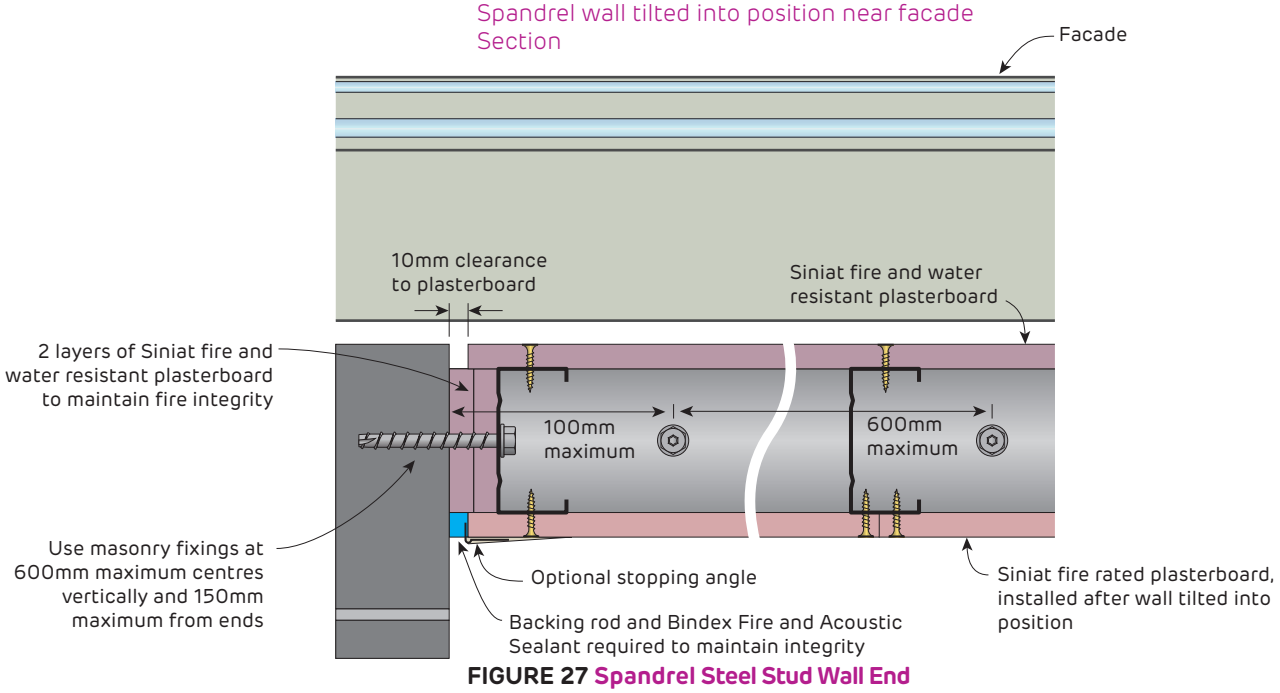

FIGURE 27 Spandrel Steel Stud Wall End
Spandrel wall tilted into position near facade
Plan



INSTALLATION	**391**
FRAMING	391
COMPONENTS	392
STEEL PROFILE INFORMATION	399
OPENING CHARTS	**400**

4.2 Openings in External Walls

The Siniat Jamb Stud system is a purpose designed opening frame system for external walls. It is typically used for window and door openings as it is durable, strong and fast to install.

The unique Jamb Stud profile is a heavy duty cold formed steel section 1.5mm thick, high grade tensile steel (G450). It is the superior solution for frame openings. The system does not require welding but rather installed with steel framing screws and Siniat's concrete screw anchors.

The Jamb Stud profile is coupled with a unique Jamb Stud Connector Bracket which allows access to install all the fixings into the Connector Bracket even for pre-fabricated door frames where access is normally restricted. This is the only bracket available with this feature.

Charts are available in this section to design the opening frame based upon wall height and opening width as well as the wind load, which is the dominant load governing the opening frame design.

Framing

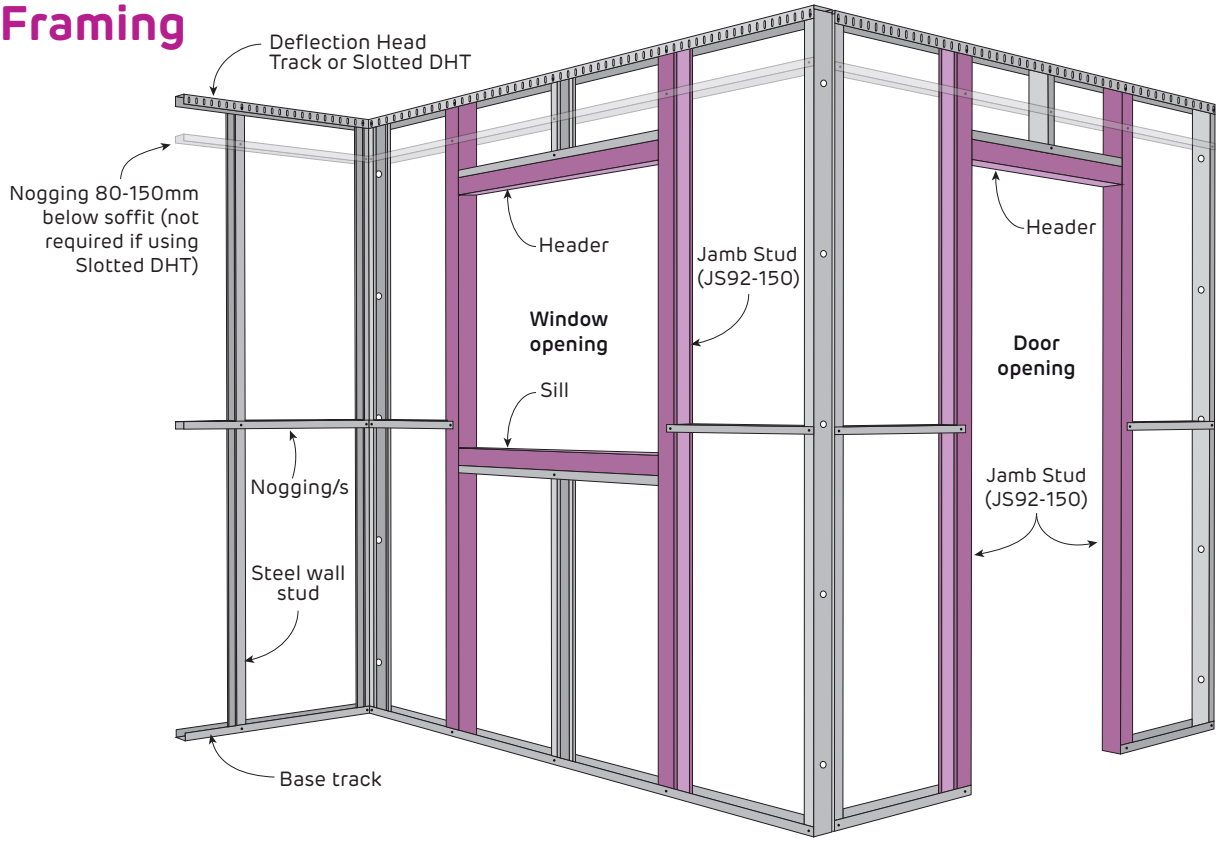

FIGURE 1 Typical External Steel Frame Wall with Window and Door Openings

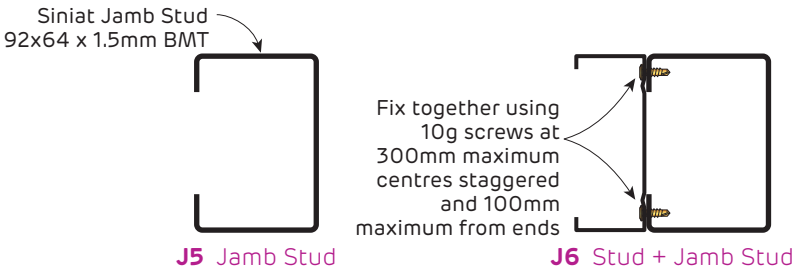

FIGURE 2 Jamb Stud Configurations
Plan

Siniat Stud and Track are 92 x 1.15mm BMT

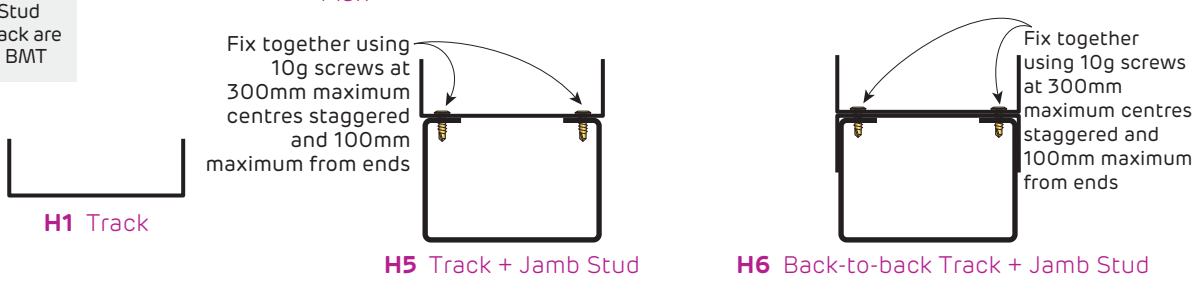

FIGURE 3 Header Configurations
Section

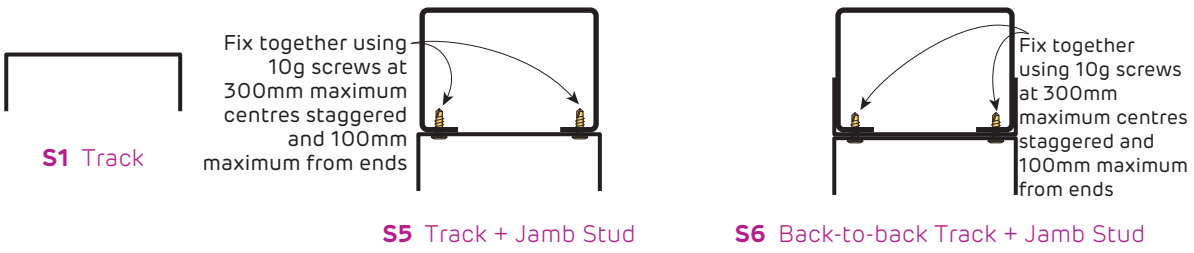

FIGURE 4 Sill Configurations
Section

Components



FIGURE 5 80mm wide Universal Bracket (UB80)
For 92mm studs
Perspective



FIGURE 6 Jamb Stud Connector Bracket (JSCB)
For 92mm Jamb Stud
Perspective

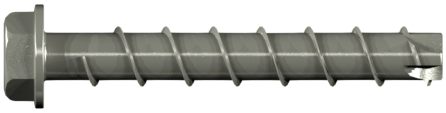

FIGURE 7 Siniat 8 x 65mm Screw Anchor (SA8x65)
Perspective



Refer to Section 1 for available profile sizes

FIGURE 8 Stud
92 x 1.15mm BMT
Profile

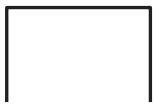

FIGURE 9 Deflection Head Track
92 x 1.15mm BMT
Profile

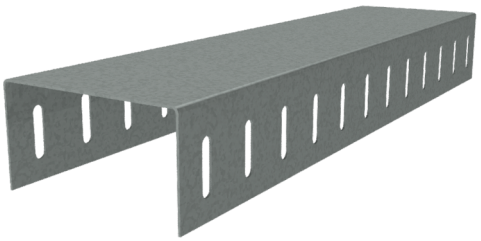

FIGURE 10 Slotted Deflection Head Track
92 x 1.15mm BMT
Perspective



FIGURE 11 Base Track
92 x 1.15mm BMT
Profile

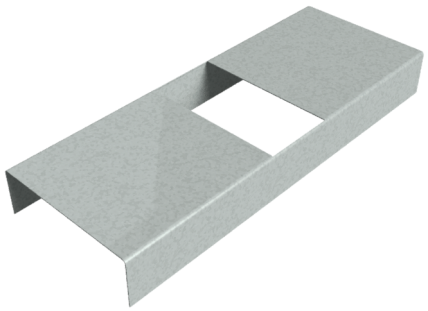

FIGURE 12 Continuous Nogging Track
92 x 0.7mm BMT
Perspective

Jamb Stud Openings
Header Connections for Windows

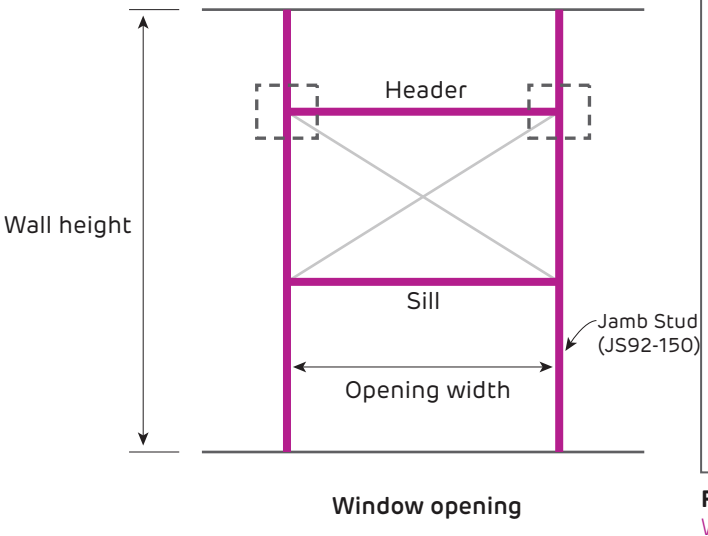

Window opening

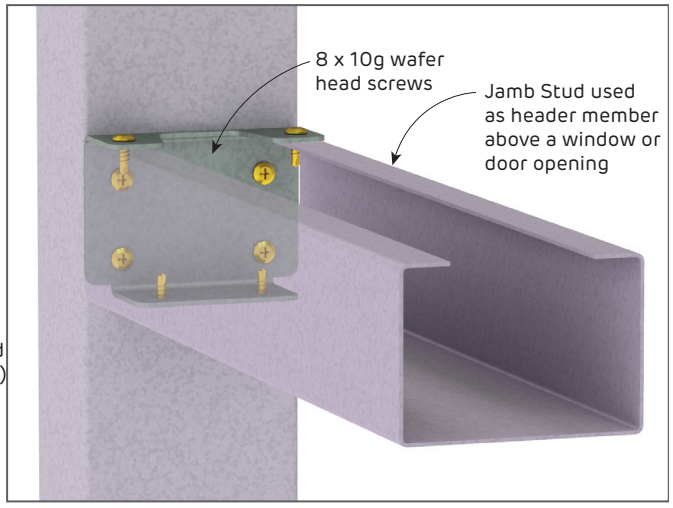

FIGURE 13 Jamb Stud Connector Bracket
With access from above and below
Perspective

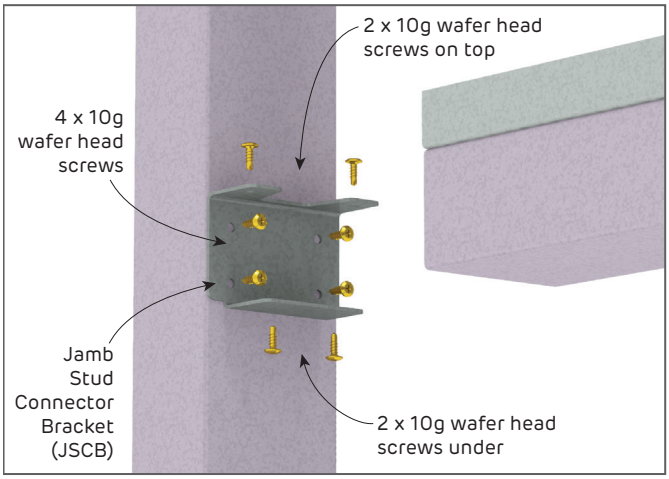

Step 1

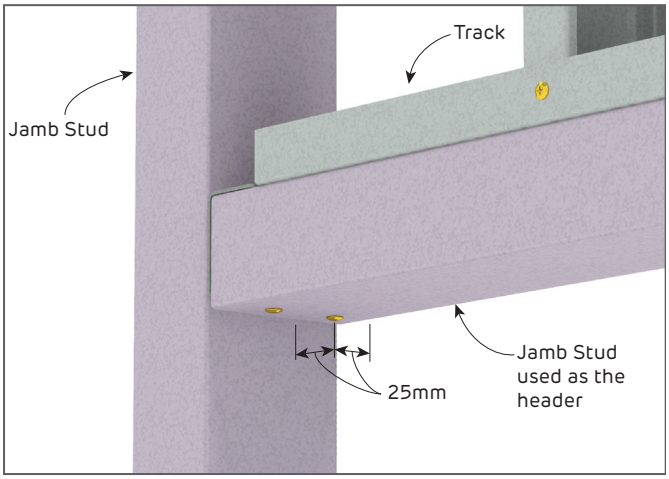

Step 2

FIGURE 14 Header to Jamb Stud Connection
Perspective

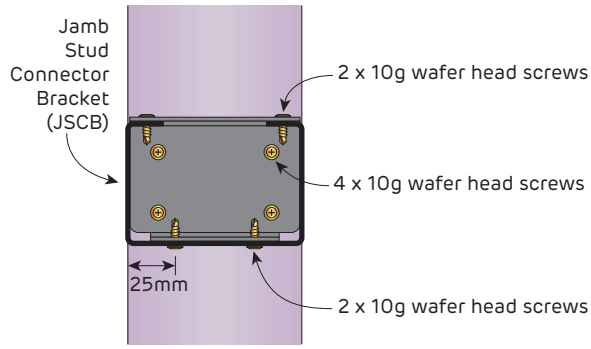

FIGURE 15a Header to Jamb Stud Connection
With Jamb Stud Connector Bracket
Section

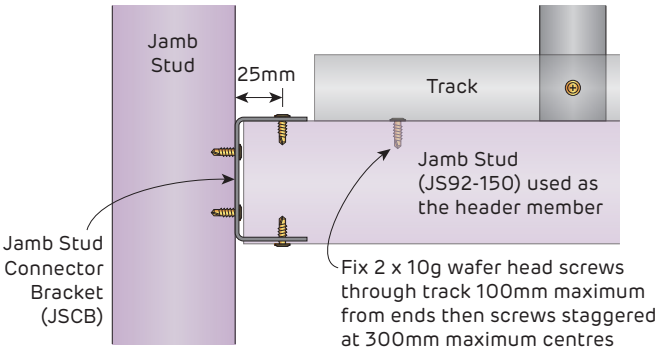

FIGURE 15b Header to Jamb Stud Connection
With Jamb Stud Connector Bracket
Elevation

Jamb Stud Openings

Header Connections for Prefabricated Door Frame

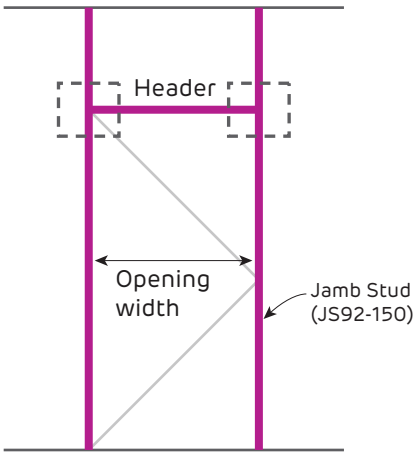

Door opening

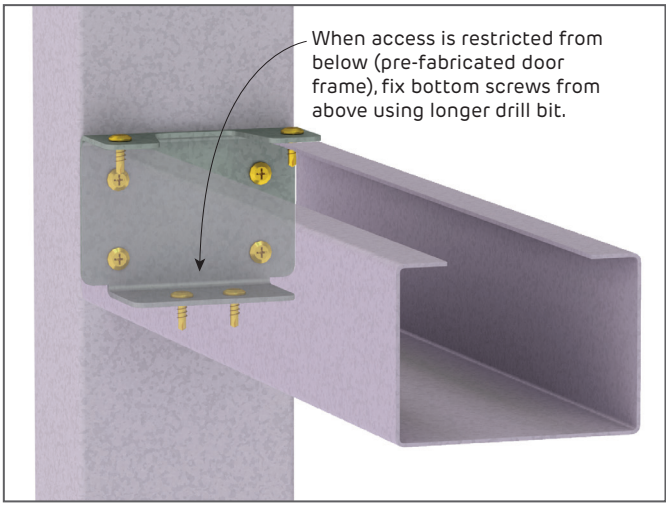

FIGURE 16 Jamb Stud Connector Bracket
With access from above only (pre-fabricated door frames)
Perspective

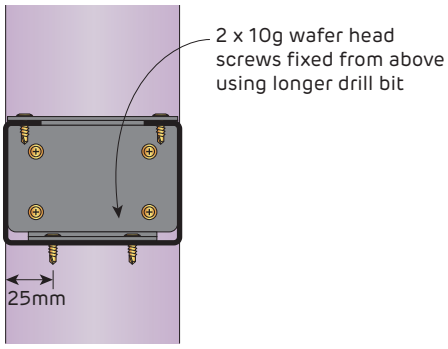

FIGURE 17a Header to Jamb Stud Connection for Prefabricated Door Frames
Section

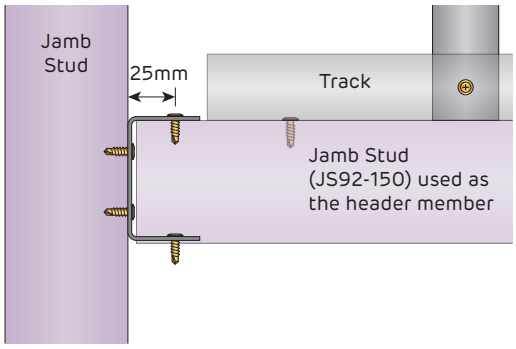

FIGURE 17b Header to Jamb Stud Connection for Prefabricated Door Frames
Elevation

Jamb Stud Openings
Sill Connections for Windows

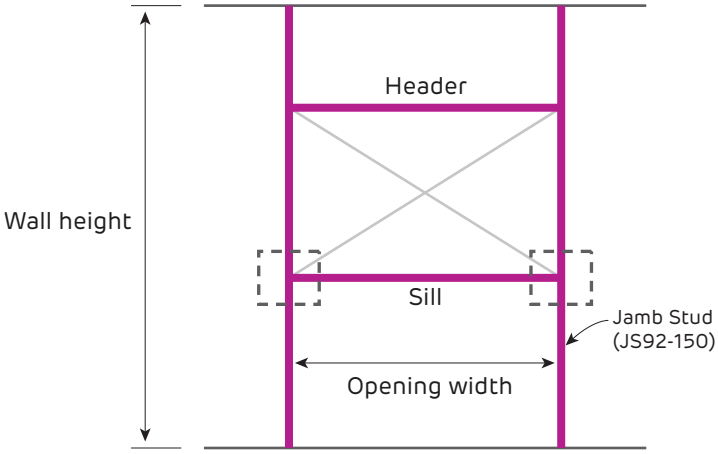

Window opening

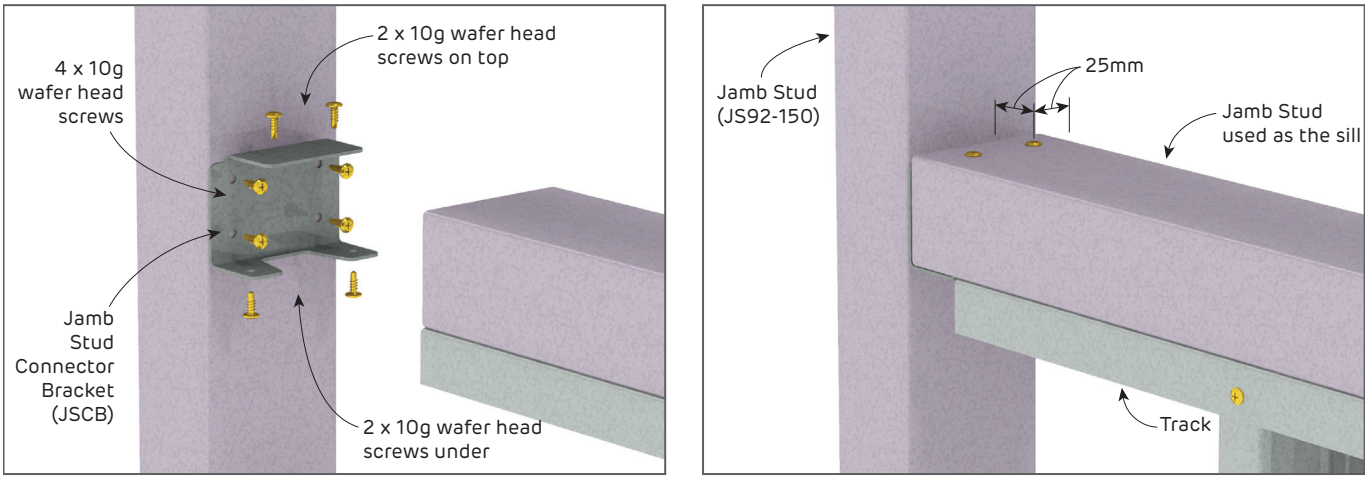

Step 1 Step 2

FIGURE 18 Sill to Jamb Stud Connection
Perspective

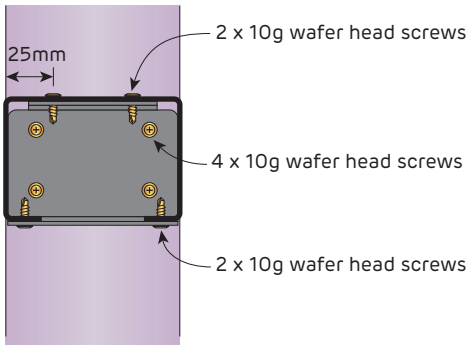

FIGURE 19a Sill to Jamb Stud Connection
With Jamb Stud Connector Bracket
Section

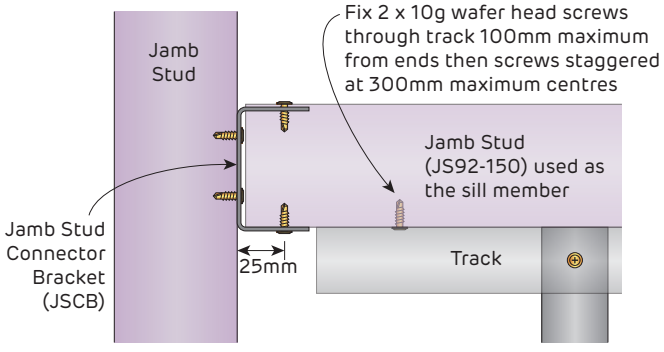

FIGURE 19b Sill to Jamb Stud Connection
With Jamb Stud Connector Bracket
Elevation

Jamb Stud Openings

Head Track Connections for Doors and Windows

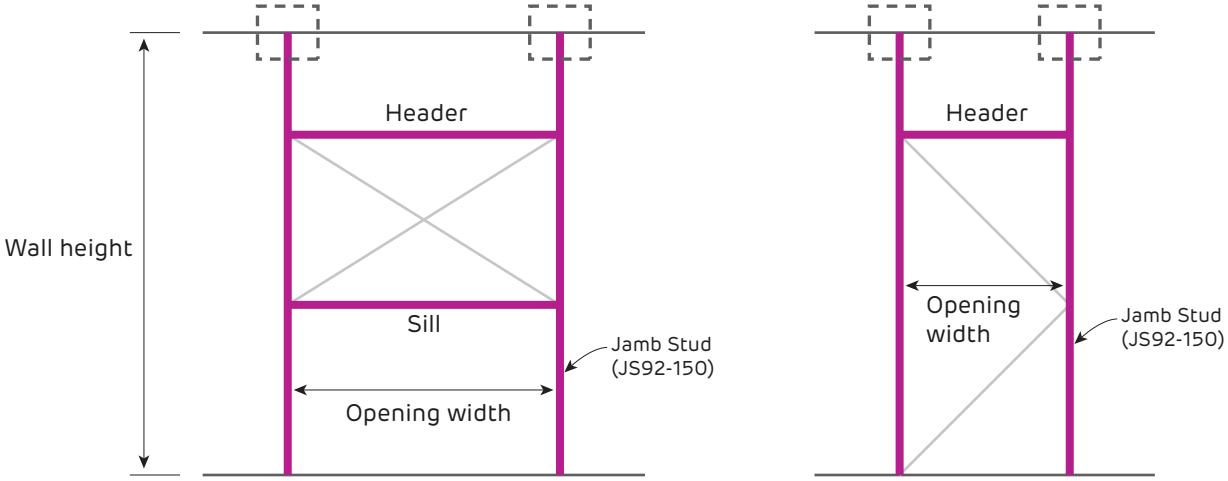

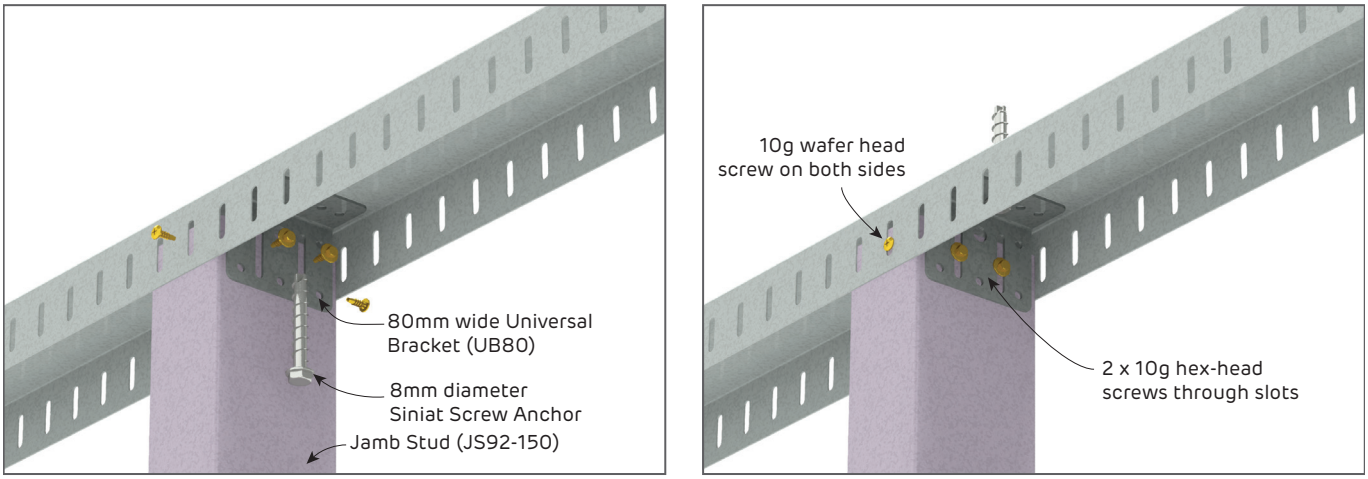

Step 1 Step 2

FIGURE 20 Jamb Stud Head Connection HC4
Perspective

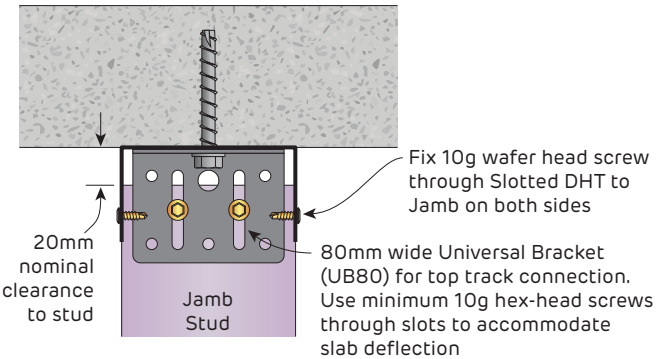

FIGURE 21a Head Connection HC4
With Universal Connector Bracket
Section

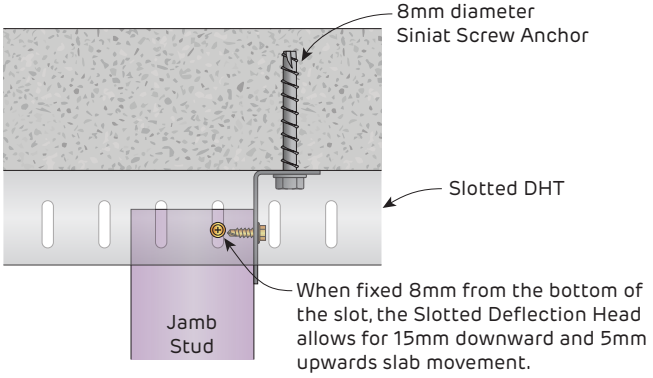

FIGURE 21b Head Connection HC4
With Universal Connector Bracket
Elevation

Jamb Stud Openings
Base Track Connections for Windows

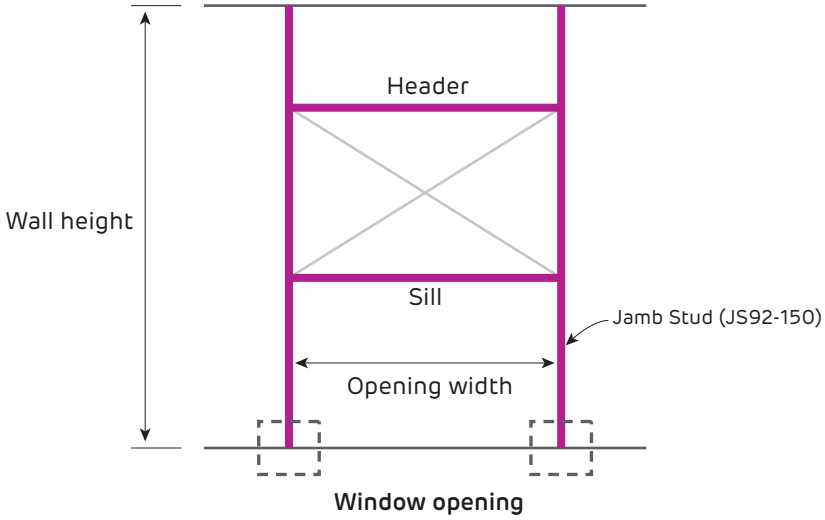

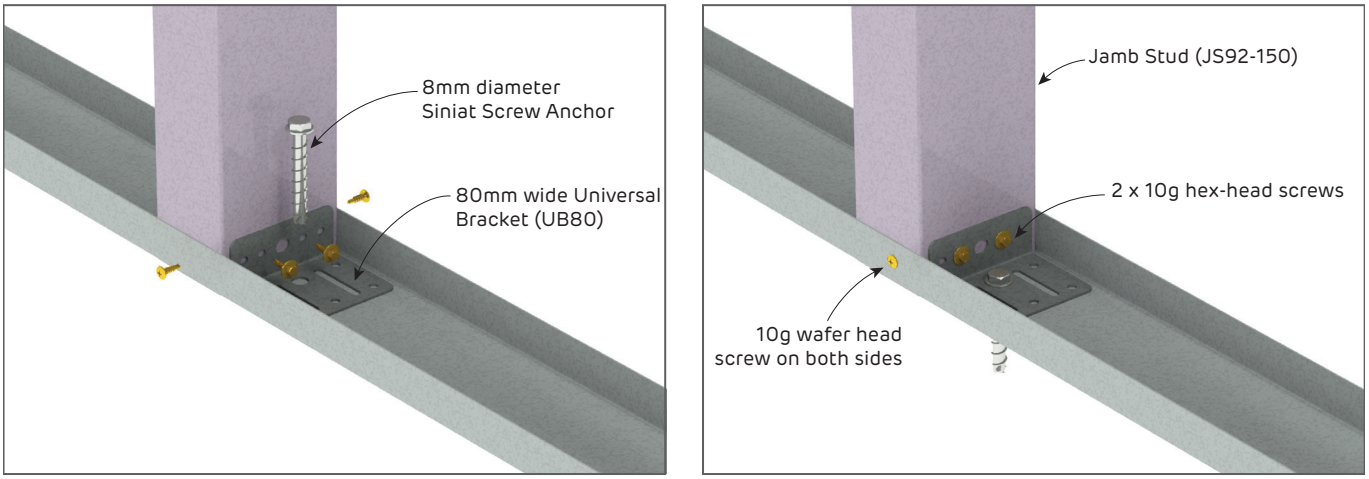

Step 1 Step 2

FIGURE 22 Jamb Stud Base Connection BC4
Perspective

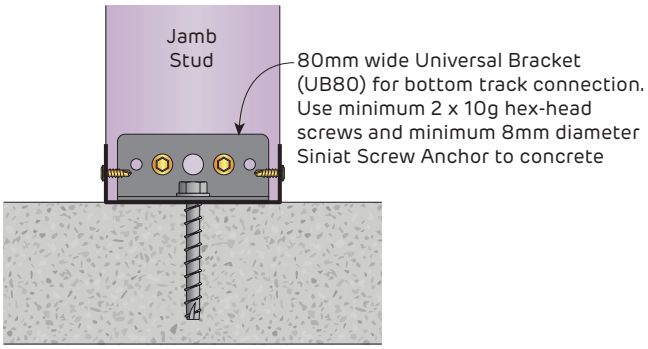

FIGURE 23a Base Connection BC4 for Window Opening
Section

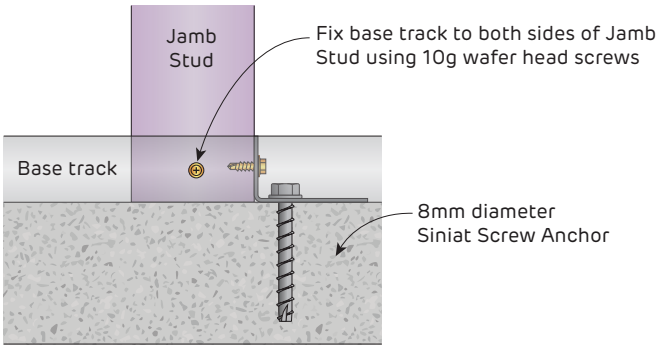

FIGURE 23b Base Connection BC4 for Window Opening
Elevation

Jamb Stud Openings
Base Track Connections for Doors

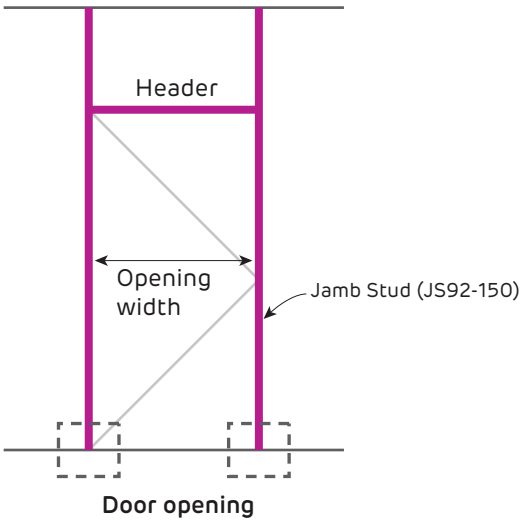

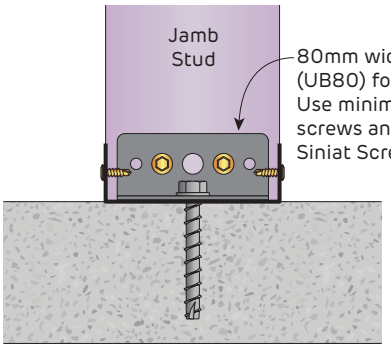

FIGURE 24a Base Connection BC4 for Door Opening
Section

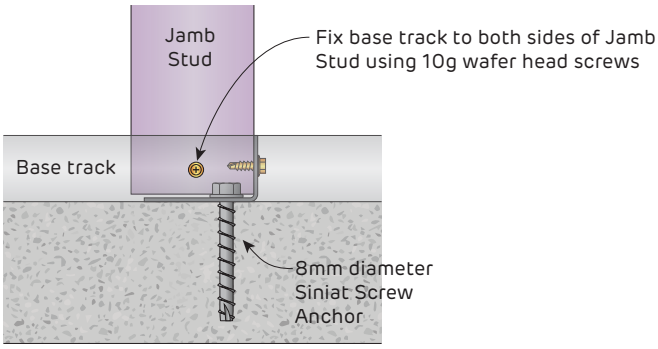

FIGURE 24b Base Connection BC4 for Door Opening
Elevation

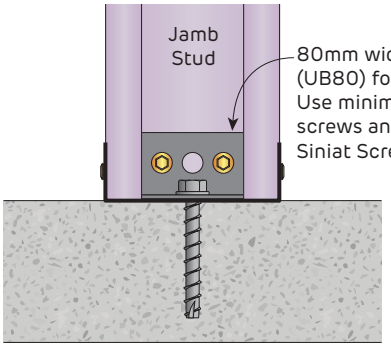

FIGURE 25a Base Connection BC4 for Prefabricated Door Frames
Section

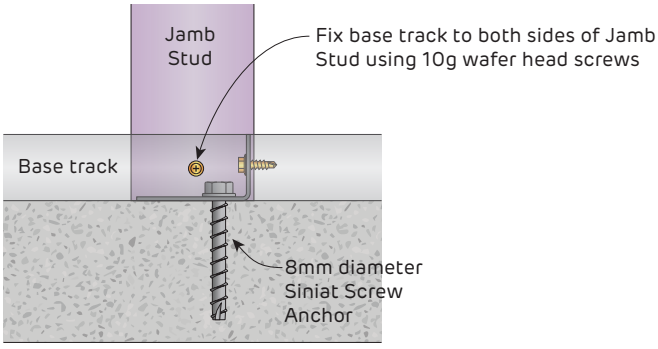

FIGURE 25b Base Connection BC4 for Prefabricated Door Frames
Elevation

Steel Profile Information

Material

Manufacturer	Profile	Grade	Ultimate	Yield	Coating
Siniat	Jamb Stud	G450	480 MPa	450 MPa	Z350
Siniat	Stud and Track	G300	340 MPa	300 MPa	AM150

1. Steel grade and coating in accordance with AS 1397 *Continuous hot-dip metallic coated steel sheet and strip*

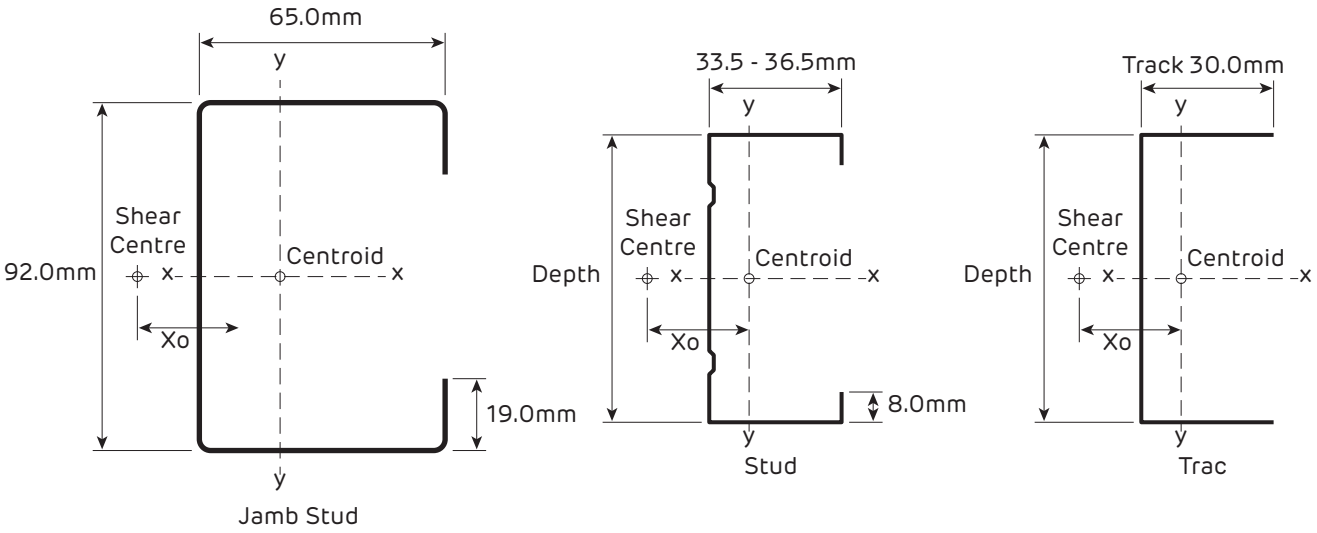

Section Properties

Profile	Dimensions (mm)			Shear Centre from Centroid (mm)	Area (mm^2)	Moment of Inertia (mm^4)		Section Modulus (mm^3)		Torsion Constant J (mm^4)	Warping Constant Iw (mm^6)
	Depth	Width	BMT	Xo		Ixx	Iyy	Zxx	Zyy		
Jamb Stud	92	65	1.5	-59.31	375.1	543,360	232,230	11,812	5,903	281.3	512,090,000
Stud	92	35	1.15	-24.7	194.7	251,300	30,770	5,548	1,199	85.8	48,940,000
Track	92	30	1.15	-15.6	172.6	220,300	13,780	4,714	583	76.1	21,050,000

Jamb Stud Openings in External Steel Stud Walls
Chart 1 Opening - REGION A - HEIGHT/240

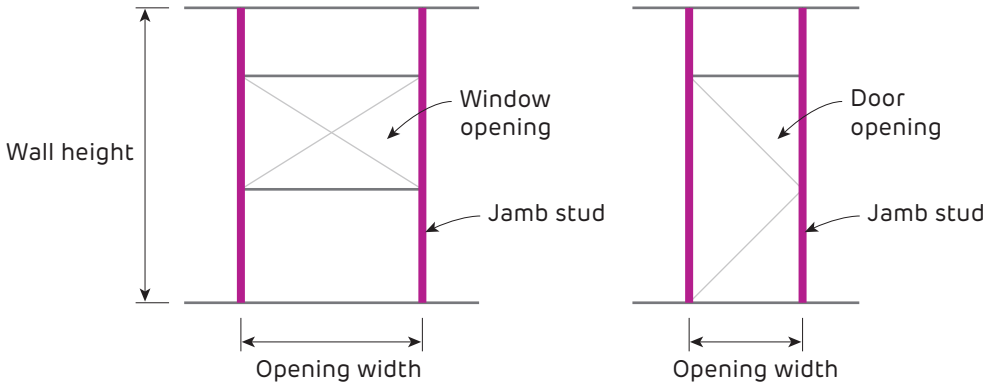

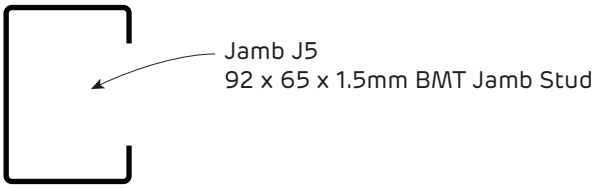

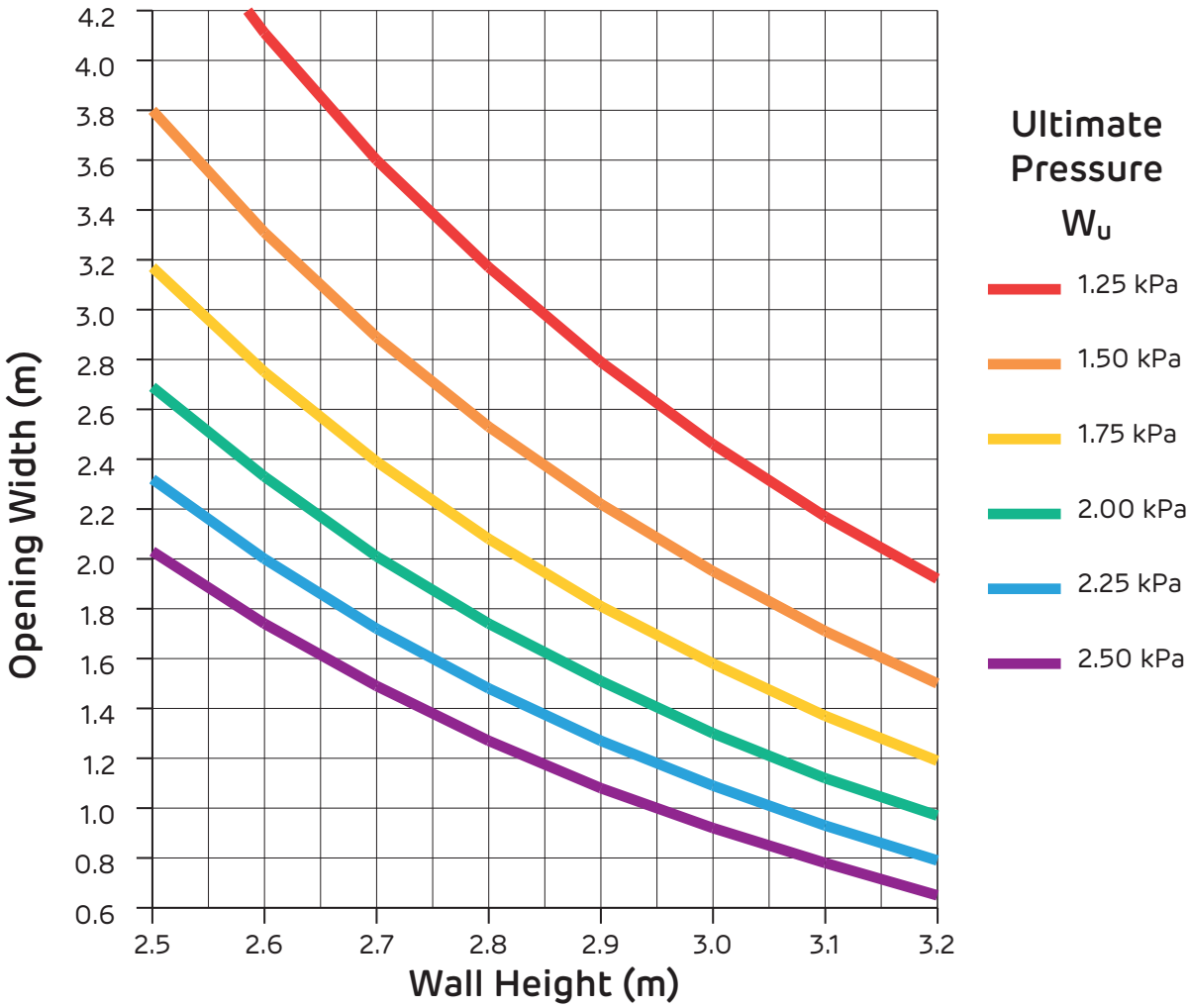

1. Opening widths based upon ultimate lateral pressures and the deflection limits stated. No additional loads considered.
2. Serviceability wind pressure taken as 67% of ultimate which is suitable for buildings of Importance Level 2 to 4.
3. Table refers to Siniat Jamb Stud G450 with Z350 corrosion coating or Siniat Track G300 with AM150 corrosion coating. Check maximum production lengths.
4. Wind pressures determined in accordance with *AS/NZS 1170.2 Wind Actions.*
4. Calculations in accordance with *AS/NZS 4600:2018 Cold Formed Steel Structures.*
5. Connections to substrate with Universal Bracket and 8mm diameter Siniat Screw Anchor. Refer to Siniat Product Data Sheet for anchor capacities in concrete.
6. Head and base tracks must be 1.15mm BMT.
7. Maximum weight of wall lining = 50 kg/m^2.
8. The nominated lateral pressures and deflection limits must be checked for suitability for a specific project.

Jamb Stud Openings in External Steel Stud Walls
Chart 2 Opening - REGION A - HEIGHT/360

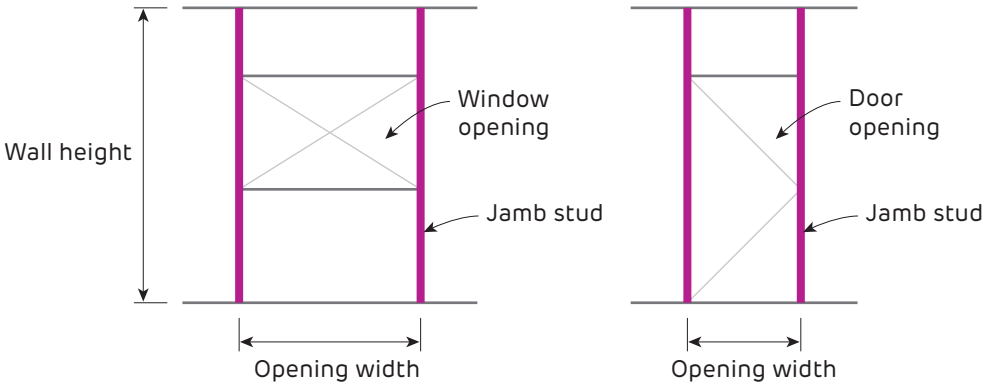

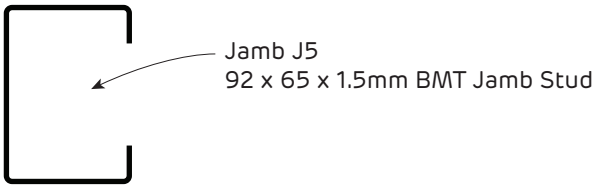

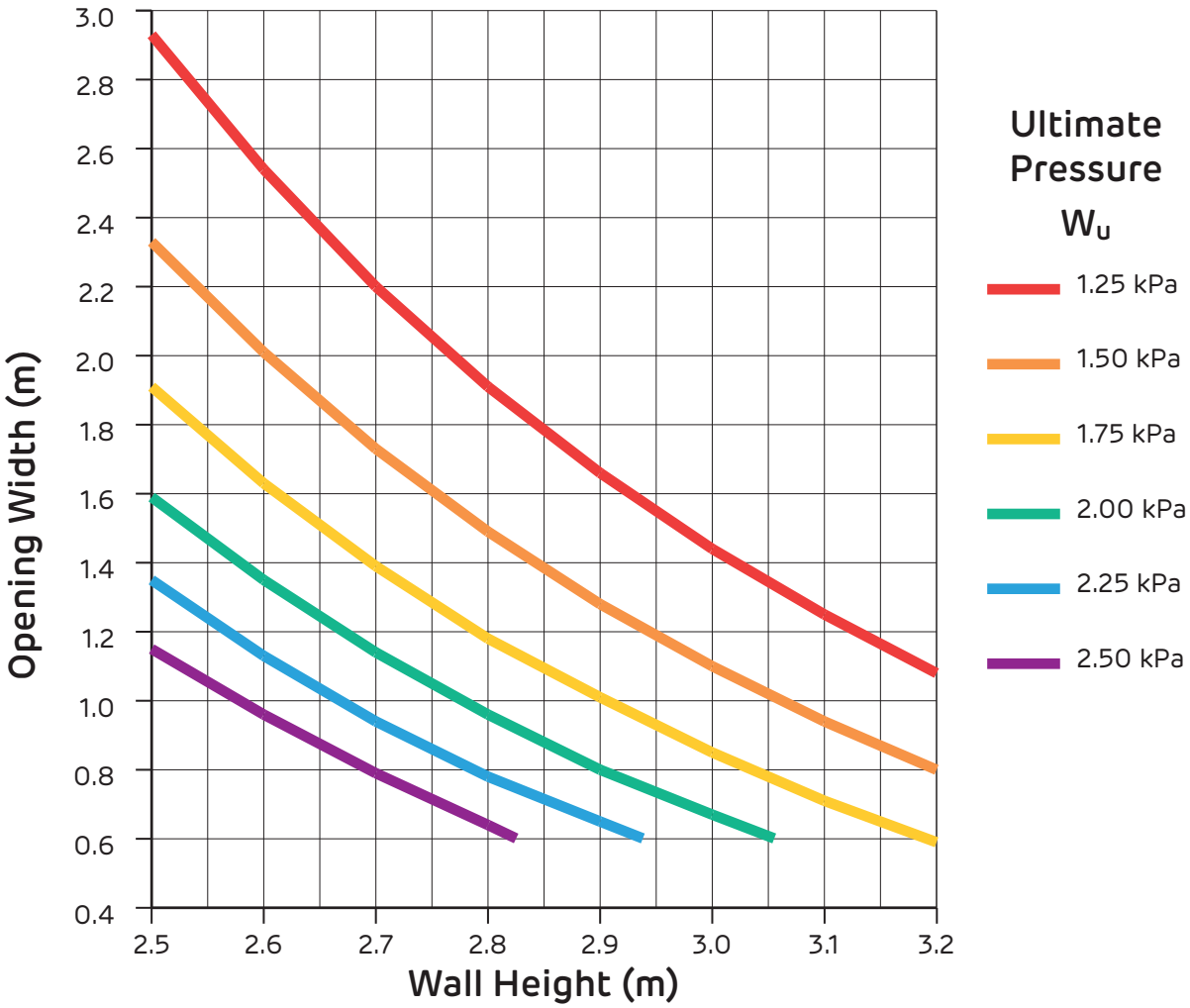

1. Opening widths based upon ultimate lateral pressures and the deflection limits stated. No additional loads considered.
2. Serviceability wind pressure taken as 67% of ultimate which is suitable for buildings of Importance Level 2 to 4.
3. Table refers to Siniat Jamb Stud G450 with Z350 corrosion coating or Siniat Track G300 with AM150 corrosion coating. Check maximum production lengths.
4. Wind pressures determined in accordance with *AS/NZS 1170.2 Wind Actions.*
4. Calculations in accordance with *AS/NZS 4600:2018 Cold Formed Steel Structures.*
5. Connections to substrate with Universal Bracket and 8mm diameter Siniat Screw Anchor. Refer to Siniat Product Data Sheet for anchor capacities in concrete.
6. Head and base tracks must be 1.15mm BMT.
7. Maximum weight of wall lining = 50 kg/m^2.
8. The nominated lateral pressures and deflection limits must be checked for suitability for a specific project.

Jamb Stud Openings in External Steel Stud Walls
Chart 3 Opening Width - REGION A - SPAN/240

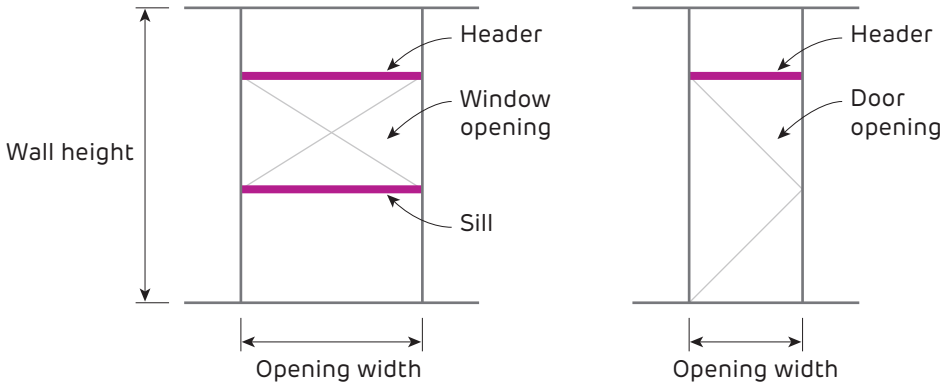

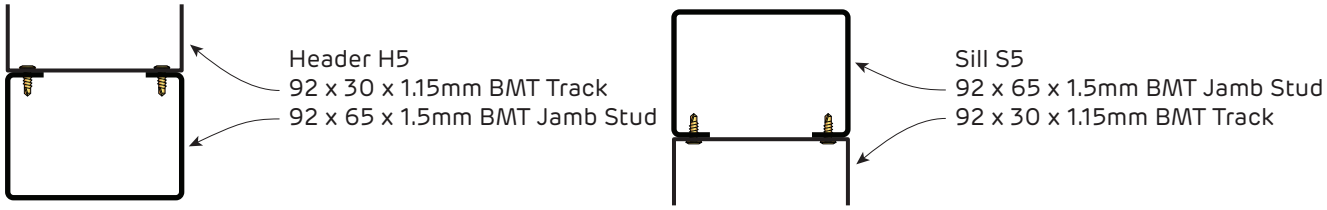

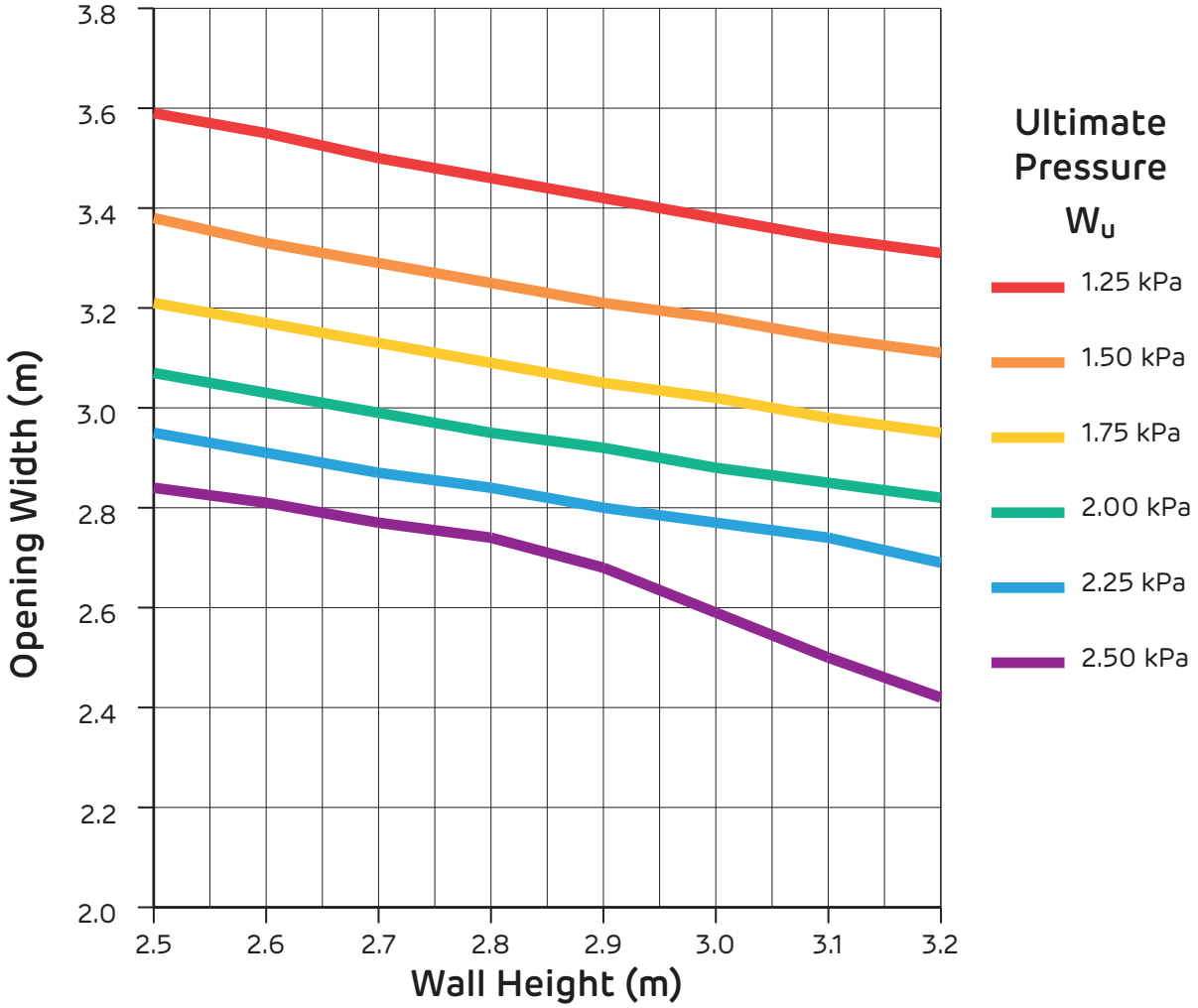

1. Opening widths based upon ultimate lateral pressures and the deflection limits stated. No additional loads considered.
2. Serviceability wind pressure taken as 67% of ultimate which is suitable for buildings of Importance Level 2 to 4.
3. Table refers to Siniat Jamb Stud G450 with Z350 corrosion coating or Siniat Track G300 with AM150 corrosion coating. Check maximum production lengths.
4. Wind pressures determined in accordance with *AS/NZS 1170.2 Wind Actions.*
4. Calculations in accordance with *AS/NZS 4600:2018 Cold Formed Steel Structures.*
5. Connections to substrate with Universal Bracket and 8mm diameter Siniat Screw Anchor. Refer to Siniat Product Data Sheet for anchor capacities in concrete.
6. Head and base tracks must be 1.15mm BMT.
7. Maximum weight of wall lining = 50 kg/m^2.
8. The nominated lateral pressures and deflection limits must be checked for suitability for a specific project.

Jamb Stud Openings in External Steel Stud Walls
Chart 4 Opening Width - REGION A - SPAN/360

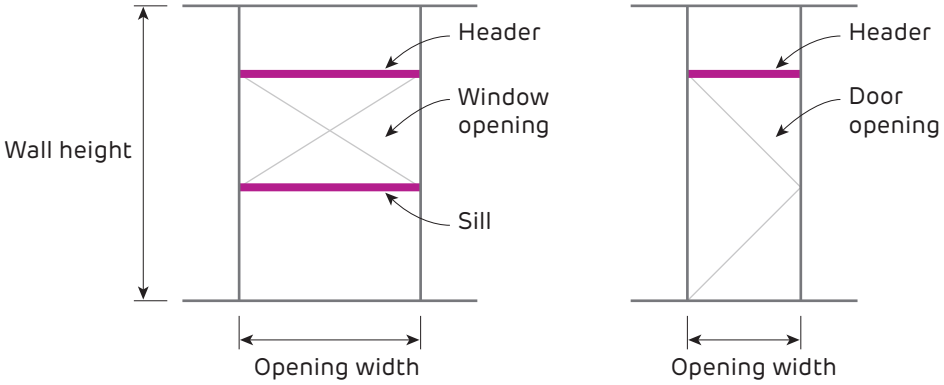

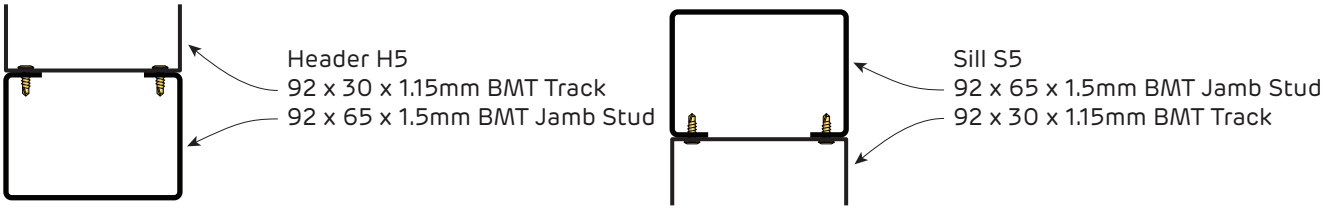

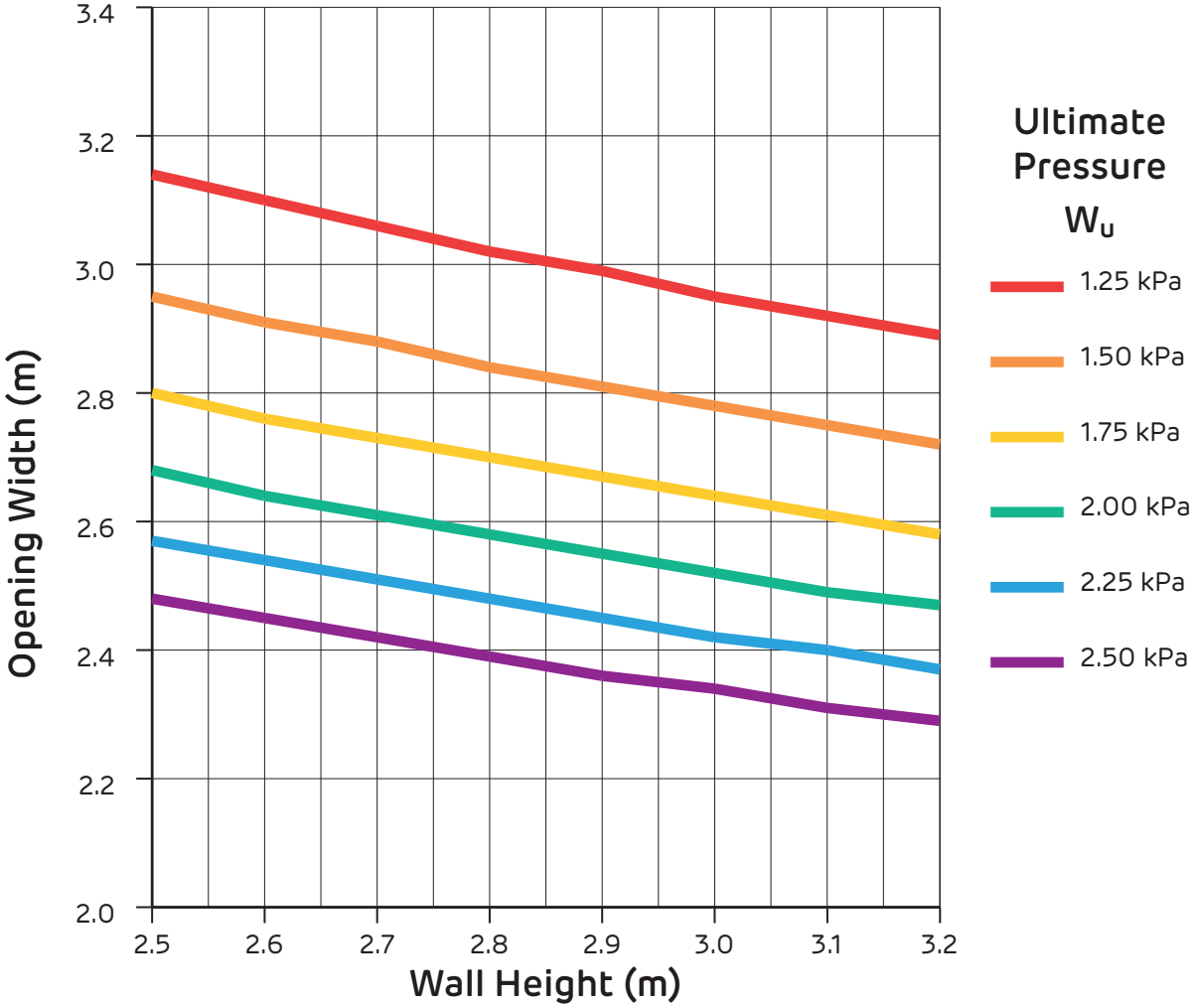

1. Opening widths based upon ultimate lateral pressures and the deflection limits stated. No additional loads considered.
2. Serviceability wind pressure taken as 67% of ultimate which is suitable for buildings of Importance Level 2 to 4.
3. Table refers to Siniat Jamb Stud G450 with Z350 corrosion coating or Siniat Track G300 with AM150 corrosion coating. Check maximum production lengths.
4. Wind pressures determined in accordance with *AS/NZS 1170.2 Wind Actions.*
4. Calculations in accordance with *AS/NZS 4600:2018 Cold Formed Steel Structures.*
5. Connections to substrate with Universal Bracket and 8mm diameter Siniat Screw Anchor. Refer to Siniat Product Data Sheet for anchor capacities in concrete.
6. Head and base tracks must be 1.15mm BMT.
7. Maximum weight of wall lining = 50 kg/m^2.
8. The nominated lateral pressures and deflection limits must be checked for suitability for a specific project.

Jamb Stud Openings in External Steel Stud Walls
Chart 5 Opening Width - REGION B - HEIGHT/240

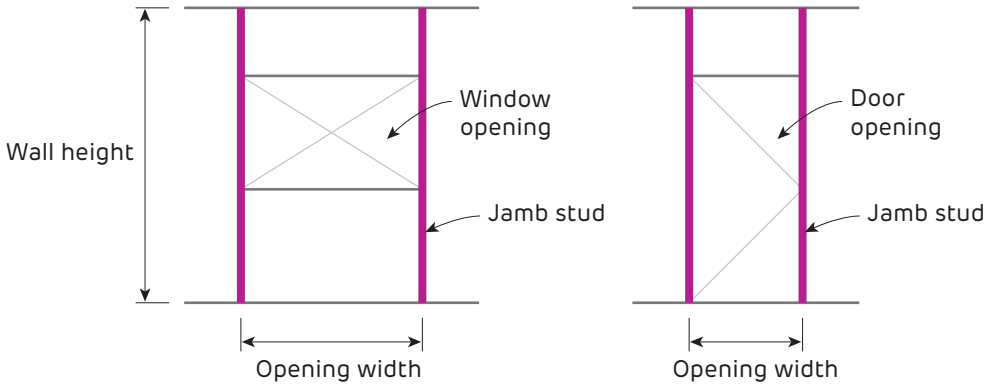

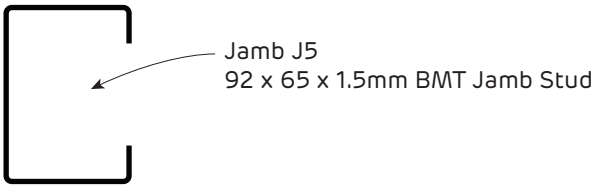

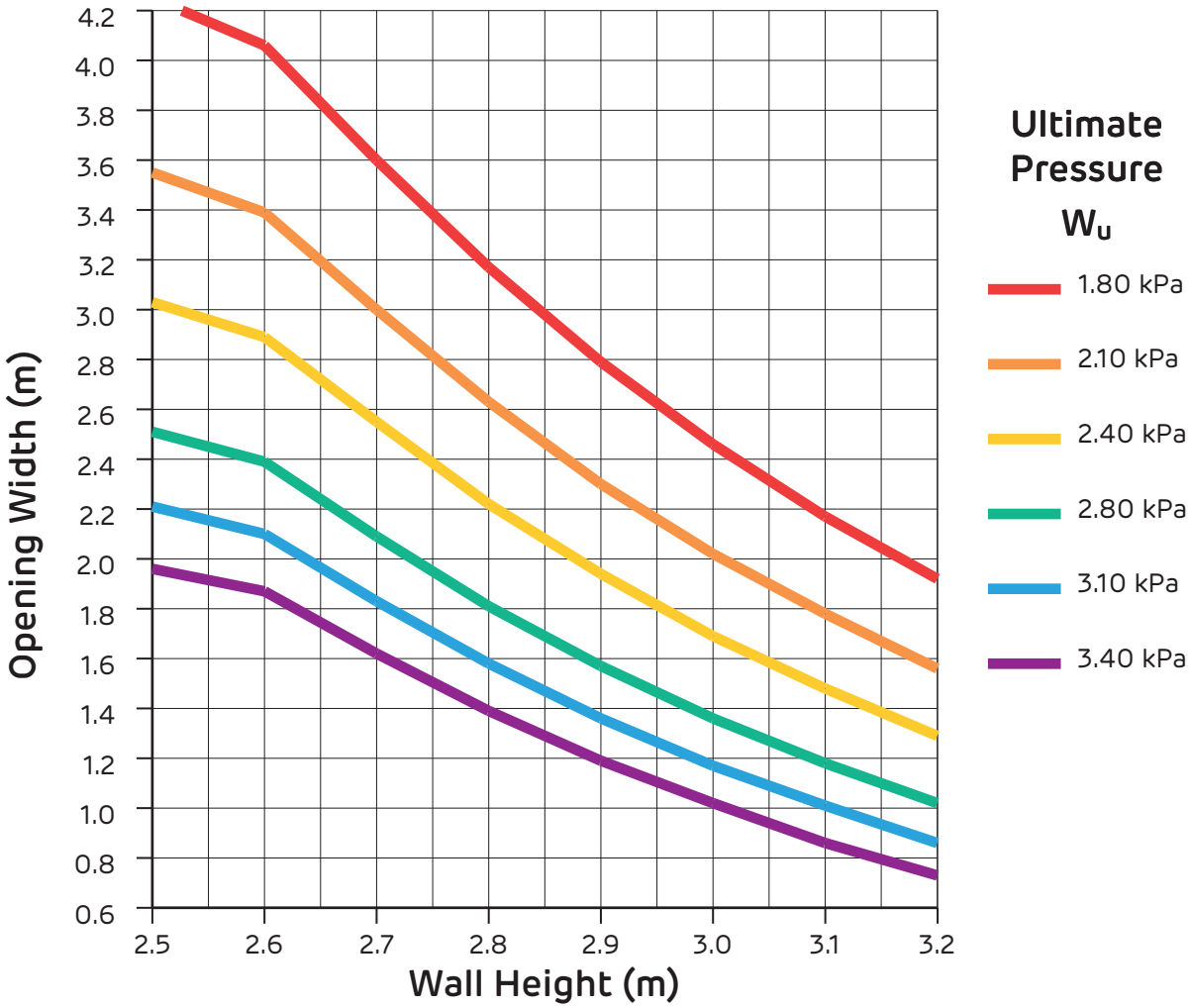

1. Opening widths based upon ultimate lateral pressures and the deflection limits stated. No additional loads considered.
2. Serviceability wind pressure taken as 47% of ultimate which is suitable for buildings of Importance Level 2 to 4.
3. Table refers to Siniat Jamb Stud G450 with Z350 corrosion coating or Siniat Track G300 with AM150 corrosion coating. Check maximum production lengths.
4. Wind pressures determined in accordance with *AS/NZS 1170.2 Wind Actions.*
4. Calculations in accordance with *AS/NZS 4600:2018 Cold Formed Steel Structures.*
5. Connections to substrate with Universal Bracket and 8mm diameter Siniat Screw Anchor. Refer to Siniat Product Data Sheet for anchor capacities in concrete.
6. Head and base tracks must be 1.15mm BMT.
7. Maximum weight of wall lining = 50 kg/m^2.
8. The nominated lateral pressures and deflection limits must be checked for suitability for a specific project.

Jamb Stud Openings in External Steel Stud Walls
Chart 6 Opening Width - REGION B - HEIGHT/360

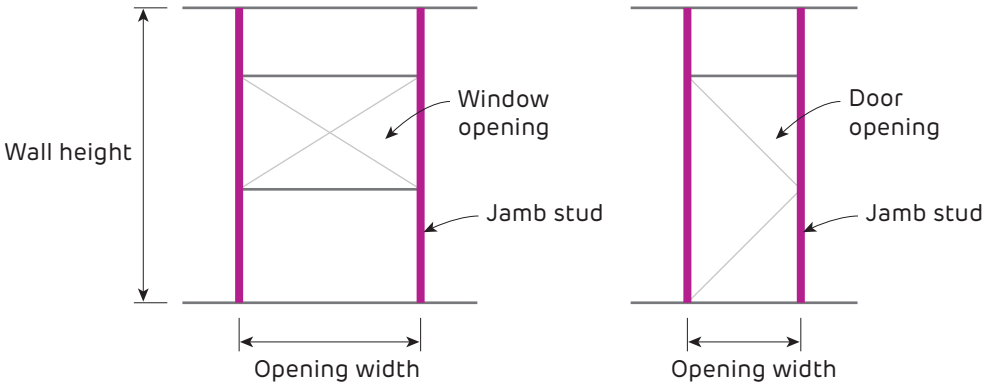

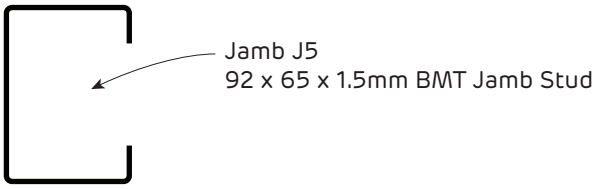

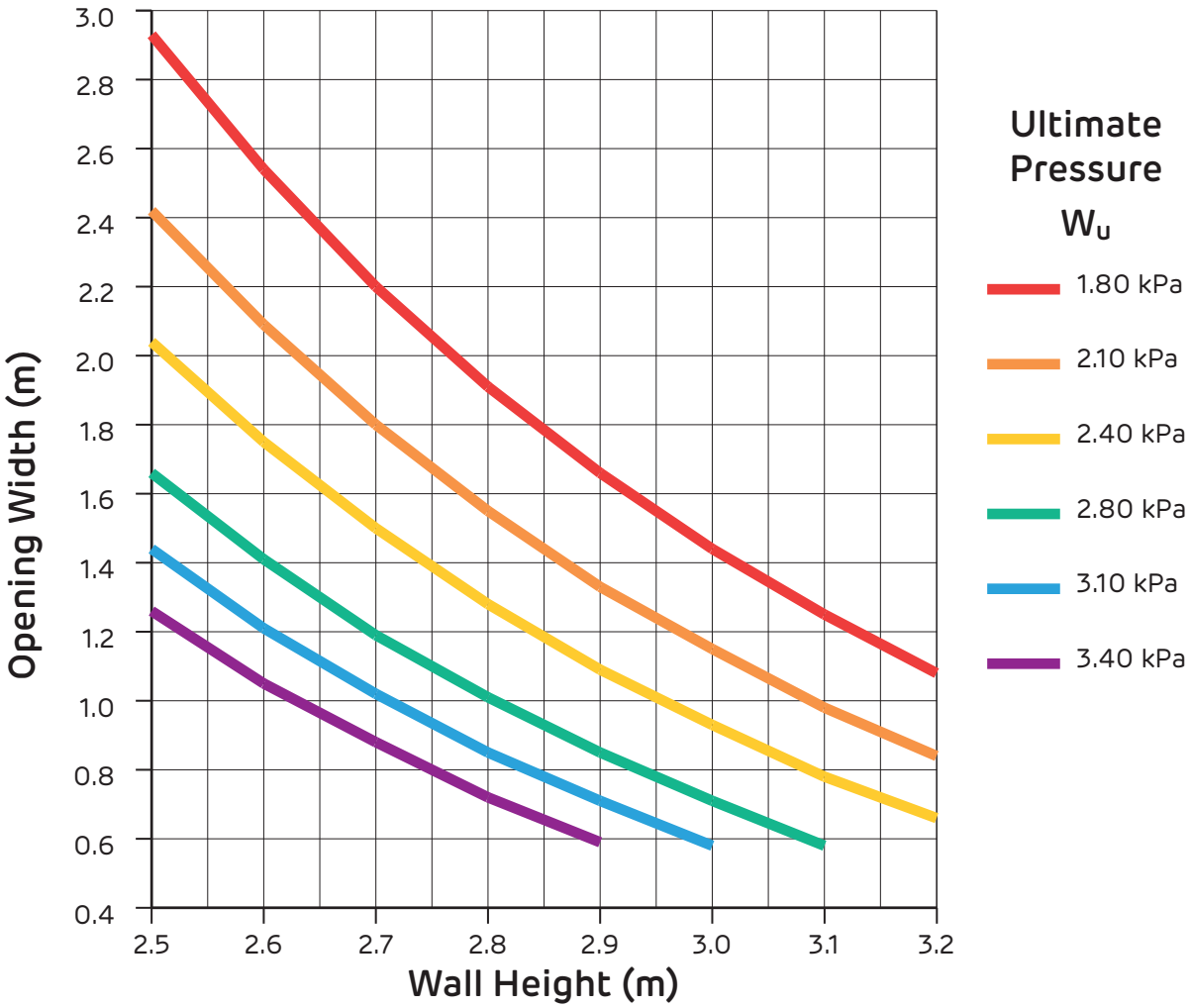

1. Opening widths based upon ultimate lateral pressures and the deflection limits stated. No additional loads considered.
2. Serviceability wind pressure taken as 47% of ultimate which is suitable for buildings of Importance Level 2 to 4.
3. Table refers to Siniat Jamb Stud G450 with Z350 corrosion coating or Siniat Track G300 with AM150 corrosion coating. Check maximum production lengths.
4. Wind pressures determined in accordance with *AS/NZS 1170.2 Wind Actions.*
4. Calculations in accordance with *AS/NZS 4600:2018 Cold Formed Steel Structures.*
5. Connections to substrate with Universal Bracket and 8mm diameter Siniat Screw Anchor. Refer to Siniat Product Data Sheet for anchor capacities in concrete.
6. Head and base tracks must be 1.15mm BMT.
7. Maximum weight of wall lining = 50 kg/m^2.
8. The nominated lateral pressures and deflection limits must be checked for suitability for a specific project.

Jamb Stud Openings in External Steel Stud Walls
Chart 7 Opening Width - REGION B - SPAN/240

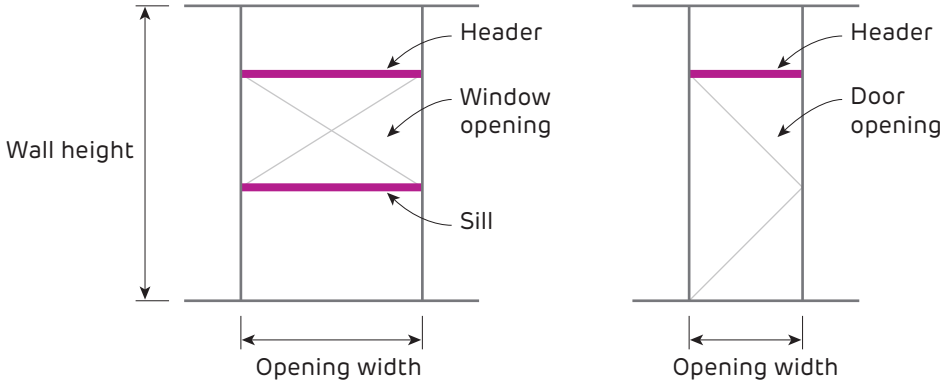

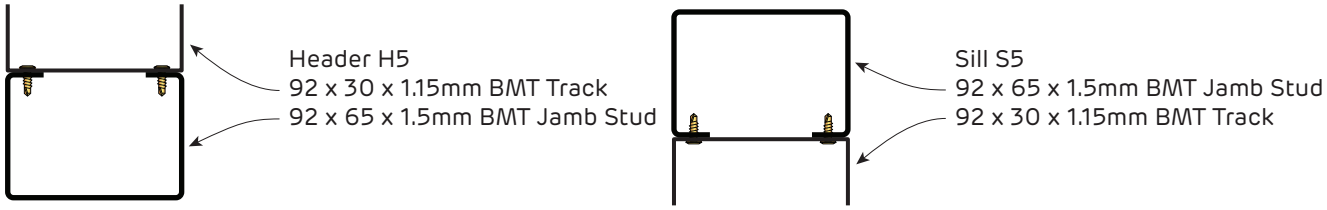

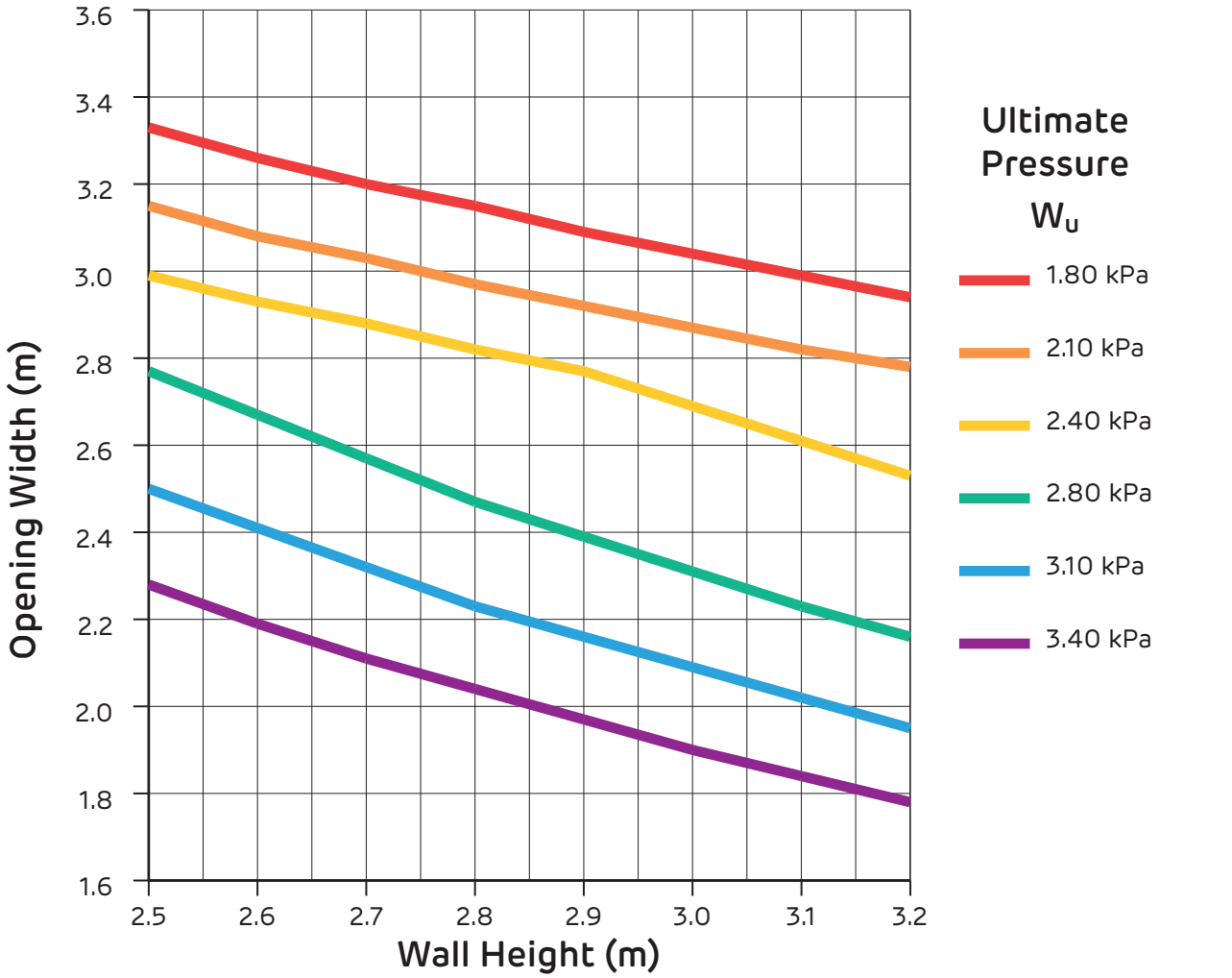

1. Opening widths based upon ultimate lateral pressures and the deflection limits stated. No additional loads considered.
2. Serviceability wind pressure taken as 47% of ultimate which is suitable for buildings of Importance Level 2 to 4.
3. Table refers to Siniat Jamb Stud G450 with Z350 corrosion coating or Siniat Track G300 with AM150 corrosion coating. Check maximum production lengths.
4. Wind pressures determined in accordance with *AS/NZS 1170.2 Wind Actions.*
4. Calculations in accordance with *AS/NZS 4600:2018 Cold Formed Steel Structures.*
5. Connections to substrate with Universal Bracket and 8mm diameter Siniat Screw Anchor. Refer to Siniat Product Data Sheet for anchor capacities in concrete.
6. Head and base tracks must be 1.15mm BMT.
7. Maximum weight of wall lining = 50 kg/m^2.
8. The nominated lateral pressures and deflection limits must be checked for suitability for a specific project.

Jamb Stud Openings in External Steel Stud Walls
Chart 8 Opening Width - REGION B - SPAN/360

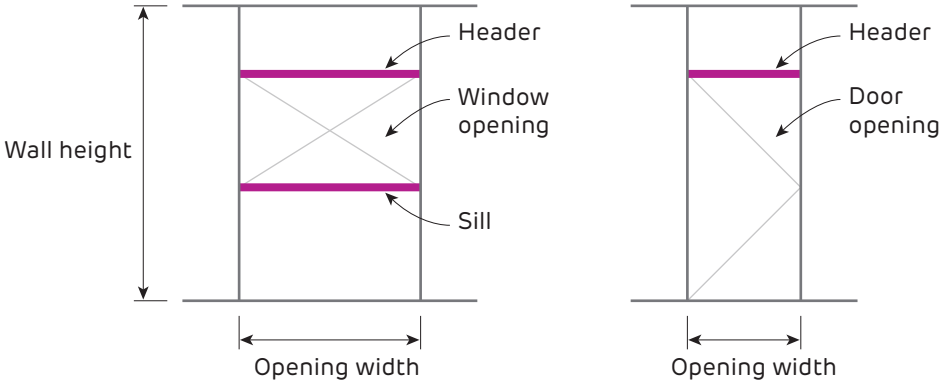

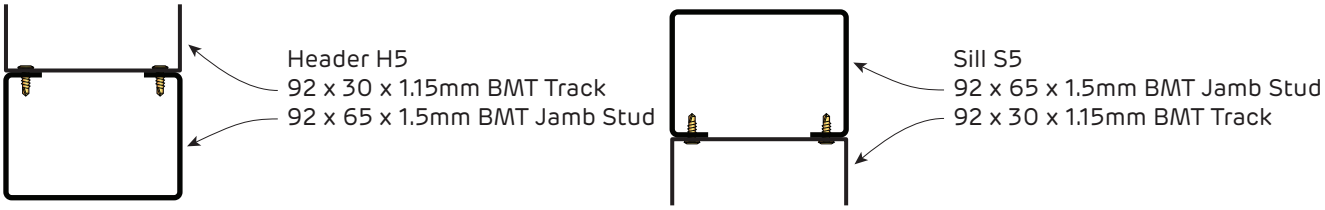

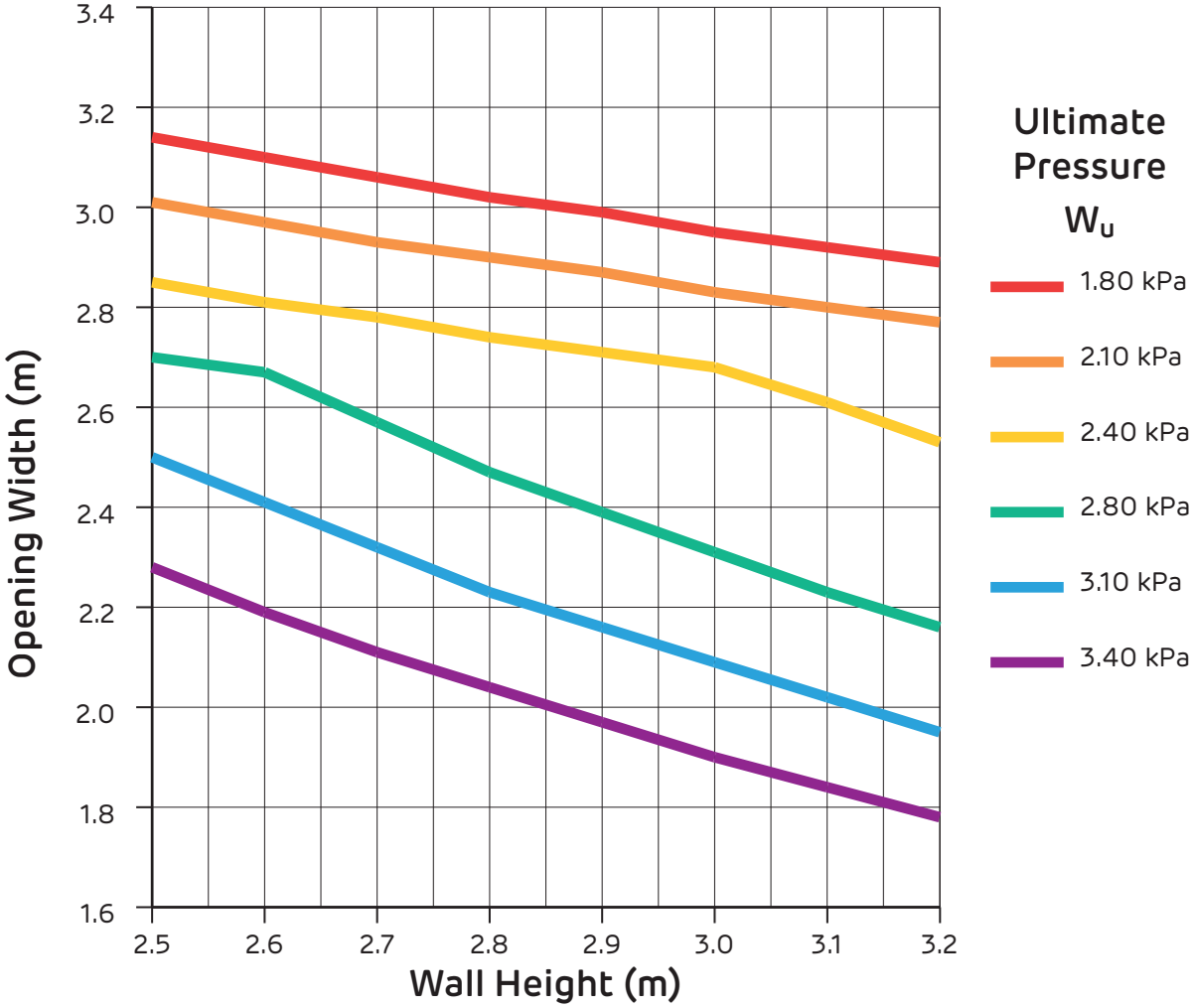

1. Opening widths based upon ultimate lateral pressures and the deflection limits stated. No additional loads considered.
2. Serviceability wind pressure taken as 47% of ultimate which is suitable for buildings of Importance Level 2 to 4.
3. Table refers to Siniat Jamb Stud G450 with Z350 corrosion coating or Siniat Track G300 with AM150 corrosion coating. Check maximum production lengths.
4. Wind pressures determined in accordance with *AS/NZS 1170.2 Wind Actions.*
4. Calculations in accordance with *AS/NZS 4600:2018 Cold Formed Steel Structures.*
5. Connections to substrate with Universal Bracket and 8mm diameter Siniat Screw Anchor. Refer to Siniat Product Data Sheet for anchor capacities in concrete.
6. Head and base tracks must be 1.15mm BMT.
7. Maximum weight of wall lining = 50 kg/m^2.
8. The nominated lateral pressures and deflection limits must be checked for suitability for a specific project.



SYSTEMS	**409**
SYSTEM DIRECTORY	409
INSTALLATION	**417**
GENERAL REQUIREMENTS	417
PLASTERBOARD LAYOUT	418
PLASTERBOARD FIXING	419
EXTERIOR CLADDING	420
CONSTRUCTION DETAILS	**424**

4.3 External Timber Framed Walls

External timber framed plasterboard walls protect the inside from weather, noise and, when applicable, fire. They must also comply with local energy efficiency provisions.

Fire rated systems in this section are designed to satisfy BCA fire rating requirements for walls built close to a property boundary. These walls are usually required to be fi re rated from the outside only.

multishield forms part of the outer wall adding fire and sound resistance which is covered by a moisture barrier and external cladding which provide the weather protection.

This section contains systems, installation instructions and construction details for fire rated and non-fi re rated external timber framed walls.

System Directory

System	Inside Lining	Outer Lining and Cladding	Frame	FRL	Acoustics[1]	
					Rw	Rw+Ctr
TSW73	1 x 10mm **masta**shield	Minimum 6mm fibre cement	Timber stud	-	40	31
TSW274	2 x 10mm **sound**shield	Minimum 6mm fibre cement	Timber stud	-	44	37
TSW470	1 x 10mm **masta**shield	1 x 13mm **multi**shield plus any external cladding	Timber stud	30/30/30 from outside	39	32
TSW473	1 x 10mm **masta**shield	1 x 16mm **multi**shield plus any external cladding	Timber stud	60/60/60 from outside	39	32
TSW471	1 x 10mm **masta**shield	2 x 13mm **multi**shield plus any external cladding	Timber stud	90/90/90 from outside	45	37
TSW472	1 x 10mm **masta**shield	3 x 13mm **multi**shield plus any external cladding	Timber stud	120/120/120 from outside	48	40
TSW491	Optional	2 x 13mm **multi**shield plus any external cladding	Timber stud	30/30/30 from outside	34	31
TSW494	Optional	2 x 16mm **multi**shield plus any external cladding	Timber stud	60/60/60 from outside	35	32
TSW492	Optional	3 x 13mm **multi**shield plus any external cladding	Timber stud	90/90/90 from outside	37	35
TSW495	Optional	3 x 16mm **multi**shield plus any external cladding	Timber stud	120/120/120 from outside	38	36
TSW476	1 x 16mm **fire**shield	1 x 16mm **multi**shield plus any external cladding	Timber stud	60/60/60	42	34
TSW477	1 x 16mm **fire**shield	2 x 13mm **multi**shield plus any external cladding	Timber stud	90/90/90 from outside 60/60/60 from inside	44	38
TSW478	2 x 13mm **fire**shield	2 x 13mm **multi**shield plus any external cladding	Timber stud	90/90/90	47	42
TSW479	2 x 16mm **fire**shield	2 x 16mm **multi**shield plus any external cladding	Timber stud	120/120/120	47	43
TSW480	1 x 10mm **masta**shield	1 x 13mm **multi**shield plus 7.5mm HardieTex™	Timber stud	30/30/30 from outside	45	37
TSW483	1 x 10mm **masta**shield	1 x 16mm **multi**shield plus 7.5mm HardieTex™	Timber stud	60/60/60 from outside	47	39
TSW481	1 x 10mm **masta**shield	2 x 13mm **multi**shield plus 7.5mm HardieTex™	Timber stud	90/90/90 from outside	48	41
TSW484	1 x 10mm **masta**shield	2 x 16mm **multi**shield plus 7.5mm HardieTex™	Timber stud	90/90/90 from outside	50	42
TSW482	1 x 10mm **masta**shield	3 x 13mm **multi**shield plus 7.5mm HardieTex™	Timber stud	120/120/120 from outside	50	44
TSW486	1 x 16mm **fire**shield	1 x 16mm **multi**shield plus 7.5mm HardieTex™	Timber stud	60/60/60	47	41
TSW487	1 x 16mm **fire**shield	2 x 13mm **multi**shield plus 7.5mm HardieTex™	Timber stud	90/90/90 from outside 60/60/60 from inside	48	43
TSW488	2 x 13mm **fire**shield	2 x 13mm **multi**shield plus 7.5mm HardieTex™	Timber stud	90/90/90	49	46
TSW489	2 x 16mm **fire**shield	2 x 16mm **multi**shield plus 7.5mm HardieTex™	Timber stud	120/120/120	50	47
TSW70	1 x 10mm **masta**shield	90mm masonry	Timber stud	60/60/60 from outside	54	46
TSW373	1 x 16mm **fire**shield	90mm masonry	Timber stud	60/60/60	54	49
TSW371	2 x 13mm **fire**shield	90mm masonry	Timber stud	90/90/90	54	**51**
TSW374	2 x 16mm **fire**shield	90mm masonry	Timber stud	120/120/120	55	**51**

1. Sound Insulation values determined using 90mm timber stud and R1.5 glasswool insulation.

TSW73

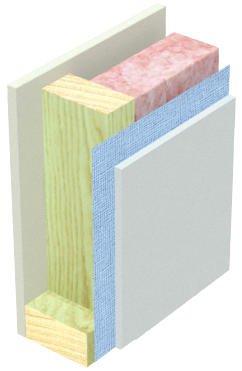

- 1 layer of 10mm **masta**shield or 10mm **water**shield
- Minimum 70mm timber stud framing at 600mm maximum centres
- Wall insulation as specified in table
- Wall wrap
- 1 layer of minimum 6mm James Hardie™ fibre cement sheeting

Stud Size (mm)	Wall Width (mm)	Insulation Pathway R-Value (m^2K/W)	Sound Insulation Rw (Rw + Ctr)			
			Pink® Batts Wall R1.5	Pink® Batts Wall R2.0	Polyester Wall R1.5	
70	87 approximate	0.23 plus insulation R value	39 (30)	-	39 (30)	Report Insul
90	107 approximate		40 (31)	40 (31)	40 (31)	

TSW274

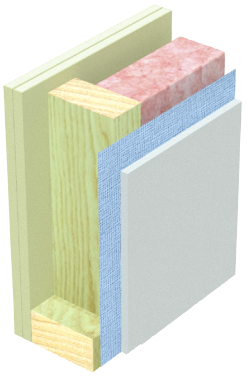

- 2 layers of 10mm **sound**shield or 10mm **opal**
- Minimum 70mm timber stud framing at 600mm maximum centres
- Wall insulation as specified in table
- Wall wrap
- 1 layer of minimum 6mm James Hardie™ fibre cement sheeting

Stud Size (mm)	Wall Width (mm)	Insulation Pathway R-Value (m^2K/W)	Sound Insulation Rw (Rw + Ctr)			
			Pink® Batts Wall R1.5	Pink® Batts Wall R2.0	Polyester Wall R1.5	
70	97 approximate	0.29 plus insulation R value	44 (35)	-	44 (35)	Report Day Design 3094-33
90	117 approximate		44 (37)	45 (38)	44 (37)	

TSW470

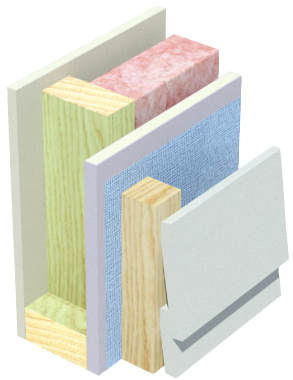

- 1 layer of 10mm **masta**shield or 10mm **water**shield
- Minimum 70mm timber stud framing at 600mm maximum centres
- Wall insulation as specified in table
- 1 layer of 13mm **multi**shield
- Wall wrap
- Any external wall cladding

Fire Resistance Level

30/30/30
rated from the outside only

Report FAR 3371

Stud Size (mm)	Wall Width (mm)	Insulation Pathway R-Value (m^2K/W)	Sound Insulation Rw (Rw + Ctr)			
			Pink® Batts Wall R1.5	Pink® Batts Wall R2.0	Polyester Wall R1.5	
70	94 + external cladding	0.84 plus insulation R value*	39 (31)	-	39 (31)	Report Insul
90	114 + external cladding		39 (32)	40 (32)	39 (31)	

TSW473

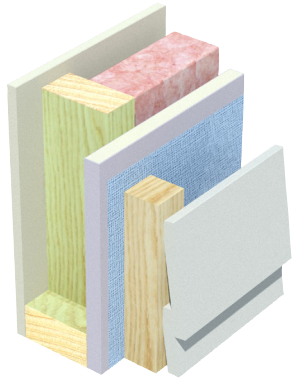

- 1 layer of 10mm **masta**shield or 10mm **water**shield
- Minimum 70mm timber stud framing at 600mm maximum centres
- Wall insulation as specified in table
- 1 layer of 16mm **multi**shield
- Wall wrap
- Any external wall cladding

Fire Resistance Level

60/60/60
rated from the outside only

Report FAR 3371

Stud Size (mm)	Wall Width (mm)	Insulation Pathway R-Value (m^2K/W)	Sound Insulation Rw (Rw + Ctr)			
			Pink® Batts Wall R1.5	Pink® Batts Wall R2.0	Polyester Wall R1.5	
70	97 + external cladding	0.86 plus insulation R value*	39 (31)	-	39 (31)	Report Insul
90	117 + external cladding		39 (32)	40 (33)	39 (32)	

* R-value based on 40mm batten cavity and anti-glare foil wall wrap - does not include thermal bridging pathway. Insulation shown is the minimum required to meet the acoustic rating. Refer to Chapter 2 for more information.

TSW471

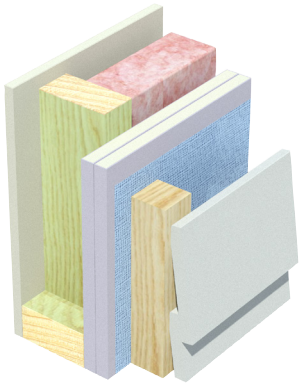

- 1 layer of 10mm **masta**shield or 10mm **water**shield
- Minimum 70mm timber stud framing at 600mm maximum centres
- Wall insulation as specified in table
- 2 layers of 13mm **multi**shield
- Wall wrap
- Any external wall cladding

Fire Resistance Level

90/90/90
rated from the outside only

Report
FAR 3371

Stud Size (mm)	Wall Width (mm)	Insulation Pathway R-Value (m²K/W)	Sound Insulation Rw (Rw + Ctr)			
			Pink® Batts Wall R1.5	Pink® Batts Wall R2.0	Polyester Wall R1.5	
70	107 + external cladding	0.91 plus insulation R value*	44 (36)	-	44 (36)	Report Insul
90	127 + external cladding		45 (37)	45 (38)	45 (37)	

TSW472

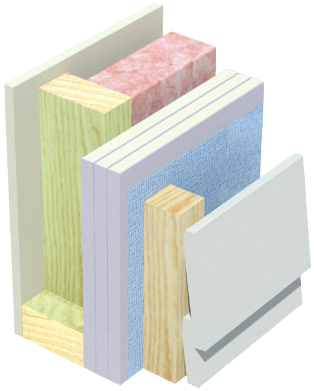

- 1 layer of 10mm **masta**shield or 10mm **water**shield
- Minimum 70mm timber stud framing at 600mm maximum centres
- Wall insulation as specified in table
- 3 layers of 13mm **multi**shield
- Wall wrap
- Any external wall cladding

Fire Resistance Level

120/120/120
rated from the outside only

Report
FAR 3371

Stud Size (mm)	Wall Width (mm)	Insulation Pathway R-Value (m²K/W)	Sound Insulation Rw (Rw + Ctr)			
			Pink® Batts Wall R1.5	Pink® Batts Wall R2.0	Polyester Wall R1.5	
70	120 + external cladding	0.99 plus insulation R value*	47 (38)	-	47 (38)	Report Insul
90	140 + external cladding		48 (40)	48 (41)	48 (40)	

TSW491

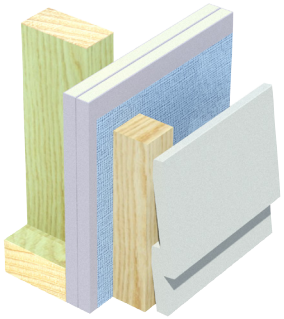

- Optional internal wall lining
- Minimum 70mm timber stud framing at 600mm maximum centres
- Optional wall insulation
- 2 layers of 13mm **multi**shield
- Wall wrap
- Any external wall cladding

Fire Resistance Level

30/30/30
rated from the outside only

Report
FAR 3348

Stud Size (mm)	Wall Width (mm)	Insulation Pathway R-Value (m²K/W)	Sound Insulation Rw (Rw + Ctr)			
			No Insulation	Pink® Batts Wall R1.5	Polyester Wall R1.5	
70	97 + external cladding	0.86 plus insulation R value*	34 (31)	34 (31)	34 (31)	Report Day Design 3094-45
90	117 + external cladding		34 (31)	34 (31)	34 (31)	

TSW494

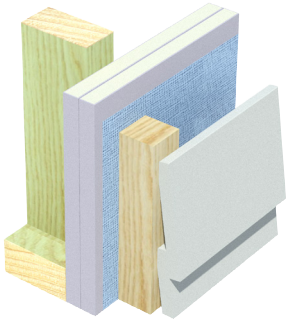

- Optional internal wall lining
- Minimum 70mm timber stud framing at 600mm maximum centres
- Optional wall insulation
- 2 layers of 16mm **multi**shield
- Wall wrap
- Any external wall cladding

Fire Resistance Level

60/60/60
rated from the outside only

Report
FAR 3348

Stud Size (mm)	Wall Width (mm)	Insulation Pathway R-Value (m²K/W)	Sound Insulation Rw (Rw + Ctr)			
			No Insulation	Pink® Batts Wall R1.5	Polyester Wall R1.5	
70	103 + external cladding	0.89 plus insulation R value*	35 (32)	35 (32)	35 (32)	Report Day Design 3094-45
90	123 + external cladding		35 (32)	35 (32)	35 (32)	

* R-value based on 40mm batten cavity and anti-glare foil wall wrap - does not include thermal bridging pathway. Insulation shown is the minimum required to meet the acoustic rating. Refer to Chapter 2 for more information.

TSW492

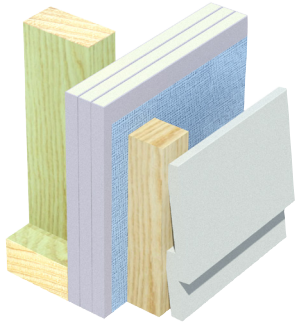

- Optional internal wall lining
- Minimum 70mm timber stud framing at 600mm maximum centres
- Optional wall insulation
- 3 layers of 13mm **multi**shield
- Wall wrap
- Any external wall cladding

Fire Resistance Level

90/90/90
rated from the outside only

Report
FAR 3348

Stud Size (mm)	Wall Width (mm)	Insulation Pathway R-Value (m²K/W)	Sound Insulation Rw (Rw + Ctr)			
			No Insulation	Pink® Batts Wall R1.5	Polyester Wall R1.5	Report
70	110 + external cladding	0.93 plus insulation R value*	37 (35)	37 (35)	37 (35)	Day Design 3094-45
90	130 + external cladding		37 (35)	37 (35)	37 (35)	

TSW495

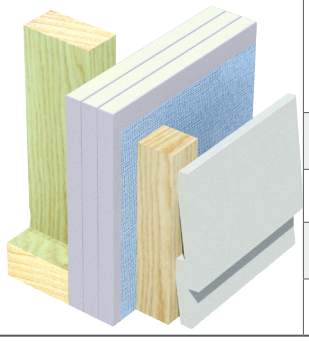

- Optional internal wall lining
- Minimum 70mm timber stud framing at 600mm maximum centres
- Optional wall insulation
- 3 layers of 16mm **multi**shield
- Wall wrap
- Any external wall cladding

Fire Resistance Level

120/120/120
rated from the outside only

Report
FAR 3348

Stud Size (mm)	Wall Width (mm)	Insulation Pathway R-Value (m²K/W)	Sound Insulation Rw (Rw + Ctr)			
			No Insulation	Pink® Batts Wall R1.5	Polyester Wall R1.5	Report
70	119 + external cladding	0.98 plus insulation R value*	38 (36)	38 (36)	38 (36)	Day Design 3094-45
90	139 + external cladding		38 (36)	38 (36)	38 (36)	

TSW476

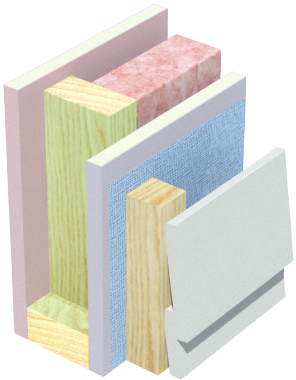

- 1 layer of 16mm **fire**shield or 16mm **multi**shield
- Minimum 70mm timber stud framing at 600mm maximum centres
- Wall insulation as specified in table
- 1 layer of 16mm **multi**shield
- Wall wrap
- Any external wall cladding

Fire Resistance Level

60/60/60
rated from both sides

Report
FAR 3371

Stud Size (mm)	Wall Width (mm)	Insulation Pathway R-Value (m²K/W)	Sound Insulation Rw (Rw + Ctr)			
			Pink® Batts Wall R1.5	Pink® Batts Wall R2.0	Polyester Wall R1.5	Report
70	103 + external cladding	0.89 plus insulation R value*	41 (33)	-	41 (33)	Day Design 3094-45
90	123 + external cladding		42 (34)	42 (36)	42 (34)	

TSW477

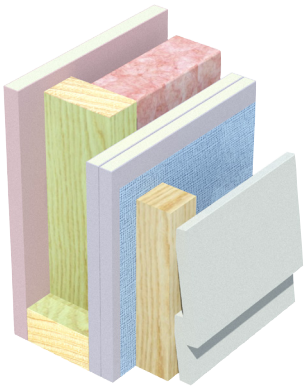

- 1 layer of 16mm **fire**shield or 16mm **multi**shield
- Minimum 70mm timber stud framing at 600mm maximum centres
- Wall insulation as specified in table
- 2 layers of 13mm **multi**shield
- Wall wrap
- Any external wall cladding

Fire Resistance Level

90/90/90
rated from the outside

60/60/60
rated from the inside

Report
FAR 3371

Stud Size (mm)	Wall Width (mm)	Insulation Pathway R-Value (m²K/W)	Sound Insulation Rw (Rw + Ctr)			
			Pink® Batts Wall R1.5	Pink® Batts Wall R2.0	Polyester Wall R1.5	Report
70	113 + external cladding	0.95 plus insulation R value*	44 (37)	-	44 (37)	Day Design 3094-45
90	133 + external cladding		44 (38)	45 (39)	44 (38)	

* R-value based on 40mm batten cavity and anti-glare foil wall wrap - does not include thermal bridging pathway. Insulation shown is the minimum required to meet the acoustic rating. Refer to Chapter 2 for more information.

TSW478

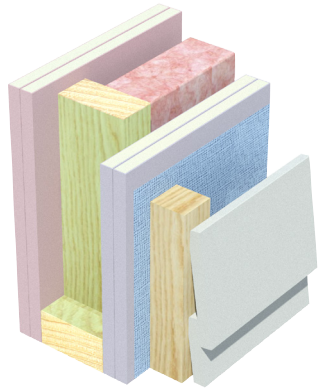

- 2 layers of 13mm **fire**shield or 13mm **multi**shield
- Minimum 70mm timber stud framing at 600mm maximum centres
- Wall insulation as specified in table
- 2 layers of 13mm **multi**shield
- Wall wrap
- Any external wall cladding with a drained and vented cavity

Fire Resistance Level

90/90/90
rated from both sides

Report
FAR 3371

Stud Size (mm)	Wall Width (mm)	Insulation Pathway R-Value (m^2K/W)	Sound Insulation Rw (Rw + Ctr)			
			Pink® Batts Wall R1.5	Pink® Batts Wall R2.0	Polyester Wall R1.5	
70	123 + external cladding	1.01 plus insulation R value*	47 (41)	-	47 (41)	Report Day Design 3094-45
90	143 + external cladding		47 (42)	48 (43)	47 (42)	

TSW479

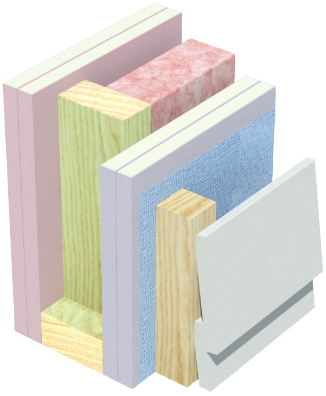

- 2 layers of 16mm **fire**shield or 16mm **multi**shield
- Minimum 70mm timber stud framing at 600mm maximum centres
- Wall insulation as specified in table
- 2 layers of 16mm **multi**shield
- Wall wrap
- Any external wall cladding

Fire Resistance Level

120/120/120
rated from both sides

Report
FAR 3371

Stud Size (mm)	Wall Width (mm)	Insulation Pathway R-Value (m^2K/W)	Sound Insulation Rw (Rw + Ctr)			
			Pink® Batts Wall R1.5	Pink® Batts Wall R2.0	Polyester Wall R1.5	
70	135 + external cladding	1.08 plus insulation R value*	47 (42)	-	47 (42)	Report Day Design 3094-45
90	155 + external cladding		47 (43)	48 (44)	47 (43)	

TSW480

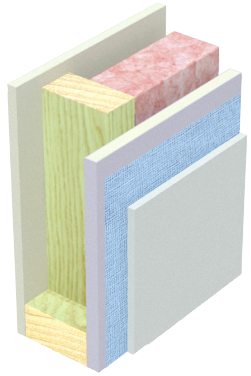

- 1 layer of 10mm **masta**shield or 10mm **water**shield
- Minimum 70mm timber stud framing at 600mm maximum centres
- Wall insulation as specified in table
- 1 layer of 13mm **multi**shield
- Wall wrap
- 1 layer of minimum 7.5mm monolithic fibre cement sheeting

Fire Resistance Level

30/30/30
rated from the outside only

Report
FAR 3371

Stud Size (mm)	Wall Width (mm)	Insulation Pathway R-Value (m^2K/W)	Sound Insulation Rw (Rw + Ctr)			
			Pink® Batts Wall R1.5	Pink® Batts Wall R2.0	Polyester Wall R1.5	
70	102 approx	0.31 plus insulation R value	45 (35)	-	44 (35)	Report Insul
90	122 approx		45 (37)	45 (38)	45 (37)	

TSW483

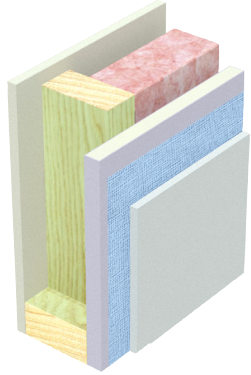

- 1 layer of 10mm **masta**shield or 10mm **water**shield
- Minimum 70mm timber stud framing at 600mm maximum centres
- Wall insulation as specified in table
- 1 layer of 16mm **multi**shield
- Wall wrap
- 1 layer of minimum 7.5mm monolithic fibre cement sheeting

Fire Resistance Level

60/60/60
rated from the outside only

Report
FAR 3371

Stud Size (mm)	Wall Width (mm)	Insulation Pathway R-Value (m^2K/W)	Sound Insulation Rw (Rw + Ctr)			
			Pink® Batts Wall R1.5	Pink® Batts Wall R2.0	Polyester Wall R1.5	
70	105 approx	0.33 plus insulation R value	47 (38)	-	46 (38)	Report Day Design 3094-43
90	125 approx		47 (39)	47 (39)	47 (39)	

* R-value based on 40mm batten cavity and anti-glare foil wall wrap - does not include thermal bridging pathway. Insulation shown is the minimum required to meet the acoustic rating. Refer to Chapter 2 for more information.

TSW481

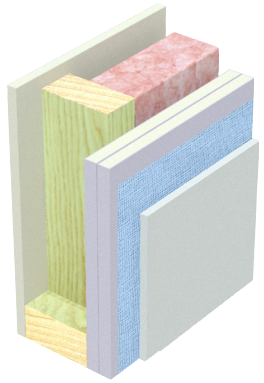

- 1 layer of 10mm **masta**shield or 10mm **water**shield
- Minimum 70mm timber stud framing at 600mm maximum centres
- Wall insulation as specified in table
- 2 layers of 13mm **multi**shield
- Wall wrap
- 1 layer of minimum 7.5mm monolithic fibre cement sheeting

Use approved fire rated penetration details in the non-fire rated internal lining to maintain FRL

Fire Resistance Level

90/90/90
rated from the outside only

Report
FAR 3371

Stud Size (mm)	Wall Width (mm)	Insulation Pathway R-Value (m^2K/W)	Sound Insulation Rw (Rw + Ctr)			
			Pink® Batts Wall R1.5	Pink® Batts Wall R2.0	Polyester Wall R1.5	
70	115 approx	0.39 plus insulation R value	47 (38)	-	47 (38)	Report Insul
90	135 approx		48 (41)	48 (41)	48 (41)	

TSW484

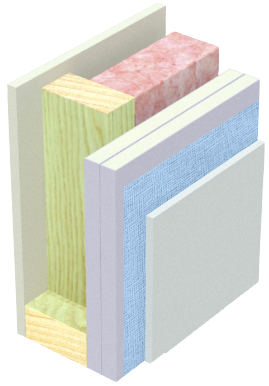

- 1 layer of 10mm **masta**shield or 10mm **water**shield
- Minimum 70mm timber stud framing at 600mm maximum centres
- Wall insulation as specified in table
- 2 layers of 16mm **multi**shield
- Wall wrap
- 1 layer of minimum 7.5mm monolithic fibre cement sheeting

Fire Resistance Level

90/90/90
rated from the outside only

Report
FAR 3371

Stud Size (mm)	Wall Width (mm)	Insulation Pathway R-Value (m^2K/W)	Sound Insulation Rw (Rw + Ctr)			
			Pink® Batts Wall R1.5	Pink® Batts Wall R2.0	Polyester Wall R1.5	
70	121 approx	0.42 plus insulation R value	49 (40)	-	49 (40)	Report Day Design 3094-43
90	141 approx		50 (42)	50 (42)	50 (42)	

TSW482

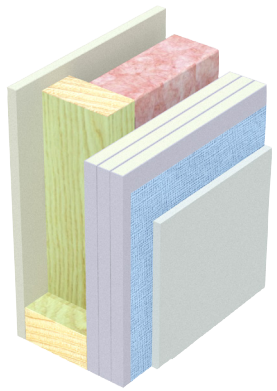

- 1 layer of 10mm **masta**shield or 10mm **water**shield
- Minimum 70mm timber stud framing at 600mm maximum centres
- Wall insulation as specified in table
- 3 layers of 13mm **multi**shield
- Wall wrap
- 1 layer of minimum 7.5mm monolithic fibre cement sheeting

Fire Resistance Level

120/120/120
rated from the outside only

Report
FAR 3371

Stud Size (mm)	Wall Width (mm)	Insulation Pathway R-Value (m^2K/W)	Sound Insulation Rw (Rw + Ctr)			
			Pink® Batts Wall R1.5	Pink® Batts Wall R2.0	Polyester Wall R1.5	
70	128 approx	0.46 plus insulation R value	49 (41)	-	49 (41)	Report Insul
90	148 approx		50 (44)	50 (44)	50 (44)	

TSW486

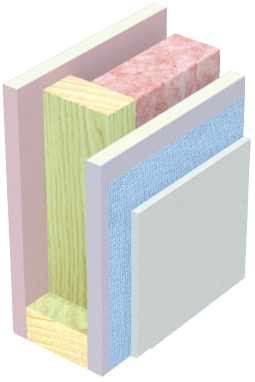

- 1 layer of 16mm **fire**shield or 16mm **multi**shield
- Minimum 70mm timber stud framing at 600mm maximum centres
- Wall insulation as specified in table
- 1 layer of 16mm **multi**shield
- Wall wrap
- 1 layer of minimum 7.5mm monolithic fibre cement sheeting

Fire Resistance Level

60/60/60
rated from both sides

Report
FAR 3371

Stud Size (mm)	Wall Width (mm)	Insulation Pathway R-Value (m^2K/W)	Sound Insulation Rw (Rw + Ctr)			
			Pink® Batts Wall R1.5	Pink® Batts Wall R2.0	Polyester Wall R1.5	
70	111 approx	0.36 plus insulation R value	47 (40)	-	47 (39)	Report Day Design 3094-43
90	131 approx		47 (41)	47 (41)	47 (41)	

* R-value does not include thermal bridging pathway. Insulation shown is the minimum required to meet the acoustic rating. Refer to Chapter 2 for more information.

TSW487

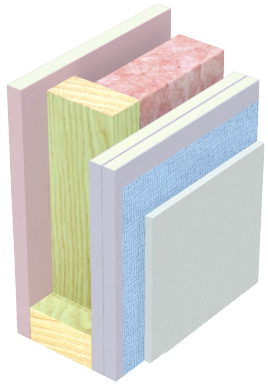

- 1 layer of 16mm **fire**shield or 16mm **multi**shield
- Minimum 70mm timber stud framing at 600mm maximum centres
- Wall insulation as specified in table
- 2 layers of 13mm **multi**shield
- Wall wrap
- 1 layer of minimum 7.5mm monolithic fibre cement sheeting

Fire Resistance Level
90/90/90
rated from the outside
60/60/60
rated from the inside
Report FAR 3371

Stud Size (mm)	Wall Width (mm)	Insulation Pathway R-Value (m^2K/W)	Sound Insulation Rw (Rw + Ctr)			
			Pink® Batts Wall R1.5	Pink® Batts Wall R2.0	Polyester Wall R1.5	
70	121 approx	0.42 plus insulation R value	47 (42)	-	47 (42)	Report Insul
90	141 approx		48 (43)	48 (44)	48 (43)	

TSW488

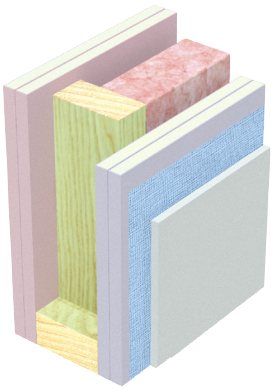

- 2 layers of 13mm **fire**shield or 13mm **multi**shield
- Minimum 70mm timber stud framing at 600mm maximum centres
- Wall insulation as specified in table
- 2 layers of 13mm **multi**shield
- Wall wrap
- 1 layer of minimum 7.5mm monolithic fibre cement sheeting

Fire Resistance Level
90/90/90
rated from both sides
Report FAR 3371

Stud Size (mm)	Wall Width (mm)	Insulation Pathway R-Value (m^2K/W)	Sound Insulation Rw (Rw + Ctr)			
			Pink® Batts Wall R1.5	Pink® Batts Wall R2.0	Polyester Wall R1.5	
70	131 approx	0.48 plus insulation R value	48 (45)	-	48 (45)	Report Insul
90	151 approx		49 (46)	49 (46)	49 (46)	

TSW489

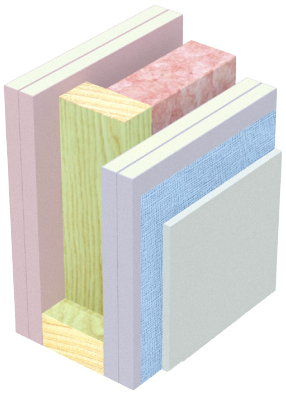

- 2 layers of 16mm **fire**shield or 16mm **multi**shield
- Minimum 70mm timber stud framing at 600mm maximum centres
- Wall insulation as specified in table
- 2 layers of 16mm **multi**shield
- Wall wrap
- 1 layer of minimum 7.5mm monolithic fibre cement sheeting

Fire Resistance Level
120/120/120
rated from both sides
Report FAR 3371

Stud Size (mm)	Wall Width (mm)	Insulation Pathway R-Value (m^2K/W)	Sound Insulation Rw (Rw + Ctr)			
			Pink® Batts Wall R1.5	Pink® Batts Wall R2.0	Polyester Wall R1.5	
70	143 approx	0.55 plus insulation R value	50 (47)	-	50 (47)	Report Insul
90	163 approx		50 (47)	50 (47)	50 (47)	

* R-value does not include thermal bridging pathway. Insulation shown is the minimum required to meet the acoustic rating. Refer to Chapter 2 for more information.

TSW70

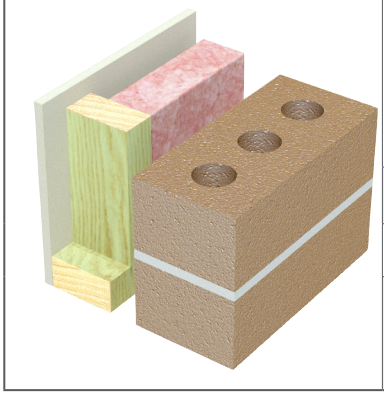

- 1 layer of 10mm **masta**shield or 10mm **water**shield
- Minimum 70mm timber stud framing at 600mm max centres
- Optional wall insulation
- Minimum 40mm air-gap
- Minimum 90mm masonry with FRL 60/60/60 and minimum laid weight 130 kg/m²

Fire Resistance Level

60/60/60
rated from the outside only

Report
FAR 3586

Stud Size (mm)	Wall Width (mm)	Insulation Pathway R-Value (m²K/W)	Sound Insulation Rw (Rw + Ctr)		
			Pink® Batts Wall R1.5	Polyester Wall R1.5	
70	210 approx	0.37 plus insulation R value	54 (46)	53 (46)	Report Insul

TSW373

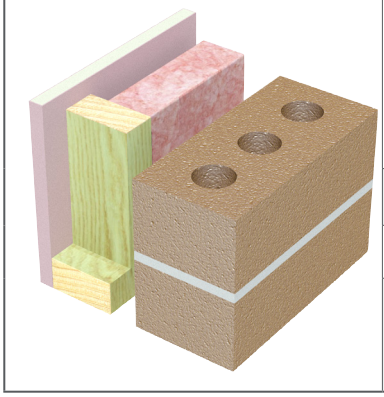

- 1 layer of 16mm **fire**shield or 16mm **multi**shield
- Minimum 70mm timber stud framing at 600mm max centres
- Optional wall insulation
- Minimum 40mm air-gap
- Minimum 90mm masonry with FRL 60/60/60 and minimum laid weight 130 kg/m²

System designed to provide fire protection to stud (not masonry)

Fire Resistance Level

60/60/60
rated from both sides

Report
FAR 3586

Stud Size (mm)	Wall Width (mm)	Insulation Pathway R-Value (m²K/W)	Sound Insulation Rw (Rw + Ctr)		
			Pink® Batts Wall R1.5	Polyester Wall R1.5	
70	216 approx	0.40 plus insulation R value	54 (49)	54 (49)	Report Insul

TSW371

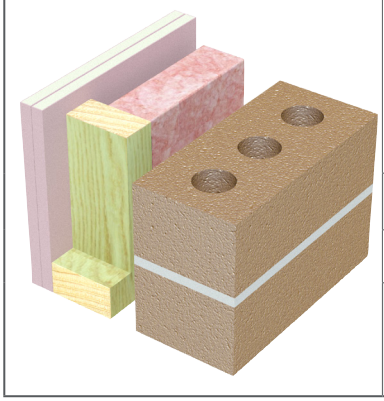

- 2 layers of 13mm **fire**shield or 13mm **multi**shield
- Minimum 70mm timber stud framing at 600mm max centres
- Optional wall insulation
- Minimum 40mm air-gap
- Minimum 90mm masonry with FRL 60/60/60 and minimum laid weight 130 kg/m²

System designed to provide fire protection to stud (not masonry)

Fire Resistance Level

90/90/90
rated from both sides

Report
FAR 3586

Stud Size (mm)	Wall Width (mm)	Insulation Pathway R-Value (m²K/W)	Sound Insulation Rw (Rw + Ctr)		
			Pink® Batts Wall R1.5	Polyester Wall R1.5	
70	226 approx	0.46 plus insulation R value	54 (**51**)	54 (**51**)	Report Insul

TSW374

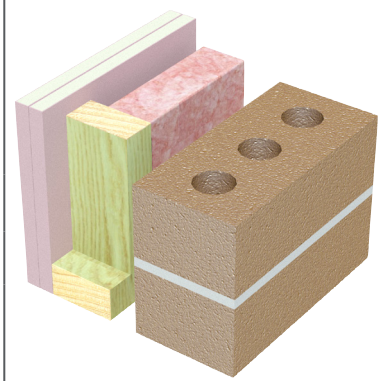

- 2 layers of 16mm **fire**shield or 16mm **multi**shield
- Minimum 70mm timber stud framing at 600mm max centres
- Optional wall insulation
- Minimum 40mm air-gap
- Minimum 90mm masonry with FRL 60/60/60 and minimum laid weight 130 kg/m²

System designed to provide fire protection to stud (not masonry)

Fire Resistance Level

120/120/120
rated from both sides

Report
FAR 3586

Stud Size (mm)	Wall Width (mm)	Insulation Pathway R-Value (m²K/W)	Sound Insulation Rw (Rw + Ctr)		
			Pink® Batts Wall R1.5	Polyester Wall R1.5	
70	232 approx	0.50 plus insulation R value	55 (**51**)	55 (**51**)	Report Insul

* R-value does not include thermal bridging pathway. Insulation shown is the minimum required to meet the acoustic rating. Refer to Chapter 2 for more information.

General Requirements

	Non-fire Rated	Fire Rated
Install control joints in plasterboard walls: > At 12m maximum intervals > At all control joints in the structure > At any change in the substrate	✓	✓
Jointing of **multi**shield is not required due to the overlying breathable wall wrap and cladding.		✓
Joint the face layer on the internal side. As a minimum, use paper tape with any Siniat jointing compound applied in one or two coats to the thickness of two coats. Alternatively, use **bindex** fire and acoustic sealant according to the Product Data Sheet.		✓
Use approved fire rated penetration details. Fire penetrations may require fire collars or other devices to maintain fire performance.		✓
Protect plasterboard sheets from the weather when installed on the exterior side of external wall framing until the moisture barrier and exterior cladding are installed.	✓	✓
Protect plasterboard from water pooling at ground level.	✓	✓
Use **bindex** fire and acoustic sealant on all gaps and around perimeter. Vermiculite plaster is not permitted.		✓
Attach all fixtures to studs or purpose installed noggings. Wall anchors must not be fixed only to the plasterboard of fire rated walls.		✓

> For acceptable modifications or variations to fire rated systems, refer to Section 2.3 Fire Resistance.
> Penetrations in external walls of Class 1 buildings do not need to have an FRL, refer to NCC Volume Two, Clause 3.7.1.5
> Insulation products nominated in system tables are the minimum required to meet the acoustic rating. Insulation with higher R-value may be required to meet the desired system R-value.

Framing

	Non-fire Rated	Fire Rated
Framing members as per structural design up to 600mm maximum.	✓	✓
Use minimum 70x45mm or 90x35mm timber studs for load bearing walls.		✓

> Plumbing and electrical services must not protrude beyond the face of the studs.
> Noggings are permitted to assist the fixing of services.
> For non-fire rated walls, noggings are not required behind recessed joints when sheeting plasterboard horizontally.

Plasterboard Layout

	Non-fire Rated	Fire Rated
Vertical joints must be 200mm minimum from the edge of any opening such as windows and doorways to minimise cracking at the joints.	✓	✓
Horizontal Layout		
Stagger butt joints in single layer systems by 300mm minimum on adjoining sheets and on opposite sides of the wall.	✓	✓
Stagger butt joints in multilayer systems by 300mm minimum on adjoining sheets and between layers.	✓	✓
First layer butt joints must be backed by a stud or back-blocked.	✓	✓
Stagger recessed edges by 300mm minimum between layers.	✓	✓
Stagger recessed edges in single layer systems by 300mm minimum on opposite sides of the wall or alternatively, back by a nogging.		✓
Vertical Layout		
Stagger butt joints in single layer systems by 300mm minimum on adjoining sheets and on opposite sides of the wall.	✓	✓
Stagger butt joints by 300mm minimum on adjoining sheets and between layers.	✓	✓
First layer butt joints must be backed by a nogging or back-blocked.	✓	
First layer butt joints must be backed by a nogging.		✓
Stagger recessed edges by 300mm minimum between layers.	✓	✓
Stagger recessed edges by 300mm minimum on opposite sides of the wall for single layer systems	✓	✓

> Install plasterboard sheets horizontally when practical reduce the effect of glancing light.

> Minimise butt joints by using long sheets.

Plasterboard Fixing

	Non-fire Rated	Fire Rated
Drive screws to just below the sheet surface, taking care not to break the paper linerboard. For over-driven screws, install another screw 20mm away. Leave or remove the over-driven screw and patch.	✓	✓
Laminating screws can be used to fix butt joints in the second and third layer.	✓	✓
Fastener and Adhesive Method		
Apply mastagrip Stud Adhesive after the frame is clean, dry, and free from grease, dust and other contaminants.	✓	
Apply mastagrip daubs 200mm minimum from screws and plasterboard edges.	✓	
Fastener Only Method		
Use the 'Screw Only Method' in fire rated areas. Stud adhesive is not permitted.	✓	✓

The 'Fastener and Adhesive Method' is recommended for non-fire rated applications. mastagrip will:

- Minimise screw popping
- Reduce the number of screw heads that may show in glancing light
- Assist in compensating for frame irregularities
- Reduce rattle noise when applied to bracing straps.

Fastener Type and Minimum Size for the Installation of Plasterboard to Softwood Timber

Plasterboard Thickness	1st Layer	2nd Layer	3rd Layer
6.5mm	2.8 x 30mm galvanised nail or 2.8 x 25mm ring shank nail or 6g x 25mm screw	2.8 x 40mm galvanised nail or 2.8 x 30mm ring shank nail or 6g x 32mm screw	-
10mm	2.8 x 40mm galvanised nail or 2.8 x 30mm ring shank nail or 6g x 32mm screw	2.8 x 50mm galvanised nail or 6g x 41mm screw *	-
13mm	2.8 x 40mm galvanised nail or 2.8 x 30mm ring shank nail or 6g x 41mm screw	2.8 x 50mm galvanised nail or 7g x 50mm screw *	3.75 x 75mm galvanised nail or 8g x 65mm screw *
16mm	2.8 x 50mm galvanised nail or 7g x 45mm screw	3.15 x 65mm galvanised nail or 8g x 60mm screw *	3.75 x 75mm galvanised nail or 8g x 75mm screw *

*10g x 38mm Laminating screws may be used as detailed in installation diagrams.

Screw Type and Minimum Size for the Installation of Plasterboard to Steel

Plasterboard Thickness	1st Layer	2nd Layer	3rd Layer
10mm	6g x 25mm screw	6g x 41mm screw *	-
13mm	6g x 25mm screw	6g x 41mm screw *	7g x 57mm screw *
16mm	6g x 32mm screw	6g x 45mm screw *	8g x 65mm screw *

For steel ≤ 0.75mm BMT, use fine thread needle point screws.

For steel ≥ 0.75mm BMT, use fine thread drill point screws.

*10g x 38mm Laminating screws may be used as detailed in installation diagrams.

Exterior Cladding

	Fire Rated
The following cladding sheets or planks are not considered detrimental to the FRL of the wall: > PERMAROCK Outdoor > James Hardie™ fibre cement sheeting > Wood or timber > Steel > Aluminium > PVC > Rendered Polystyrene > Cladding fixed and supported independently of the wall For class 2 to 9 buildings, also refer to NCC Volume One Section C, CP2 Spread of fire requirements.	✓
Fix cladding or cladding battens to the timber frame through the **multi**shield.	✓
Extend the external fire rated wall up to the non-combustible roof covering or non-combustible eaves lining. Refer to Construction Details.	✓

> Protect plasterboard sheets from the weather when installed on the exterior side of external wall framing until the moisture barrier and exterior cladding are installed.

> Exterior cladding and the moisture barrier once installed, must provide protection from the weather.

> Use construction techniques that direct condensation and rain away from plasterboard.

> Siniat recommends a drained cavity between the external cladding and the **multi**shield for weathertightness and durability.

> Battens between external cladding and external plasterboard do not change the FRL of the system.

FIGURE 1 Fire Rated 1 Layer - Horizontal
Fastener Only Method

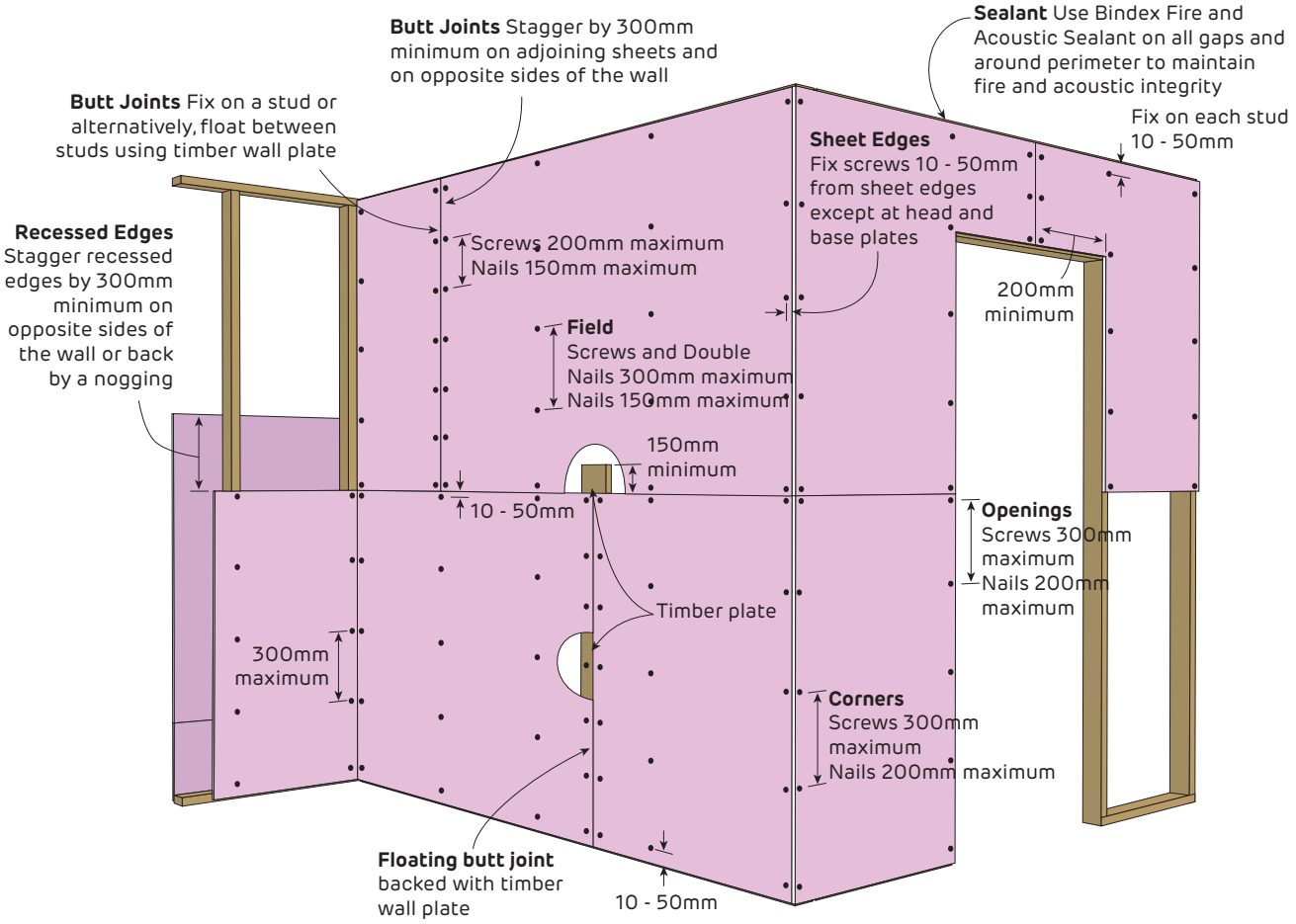

FIGURE 2 Fire Rated 2 Layers - Horizontal + Horizontal
Screw Only Method

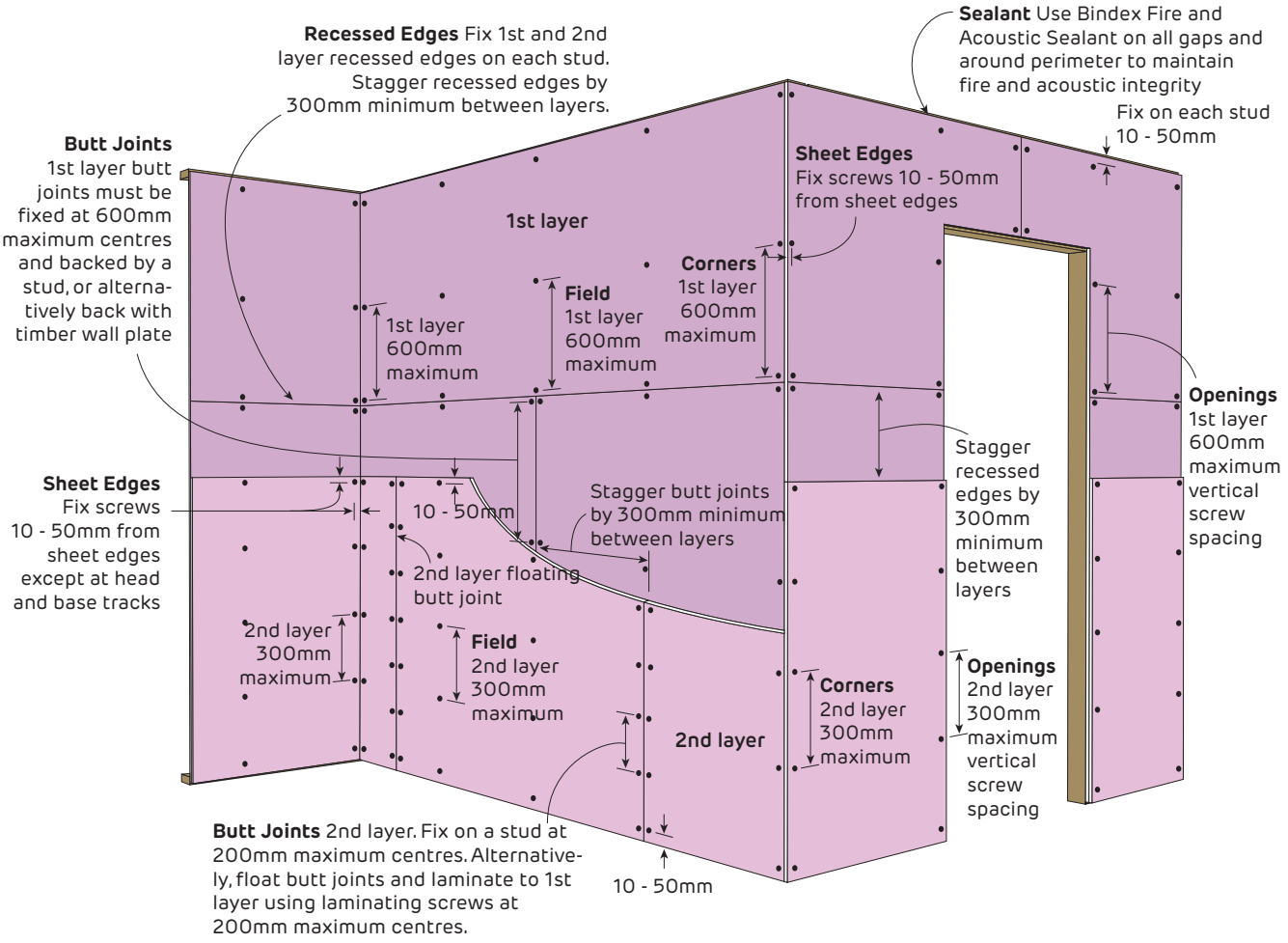

FIGURE 3 Fire Rated 3 Layers - Horizontal + Horizontal + Horizontal
Screw Only Method

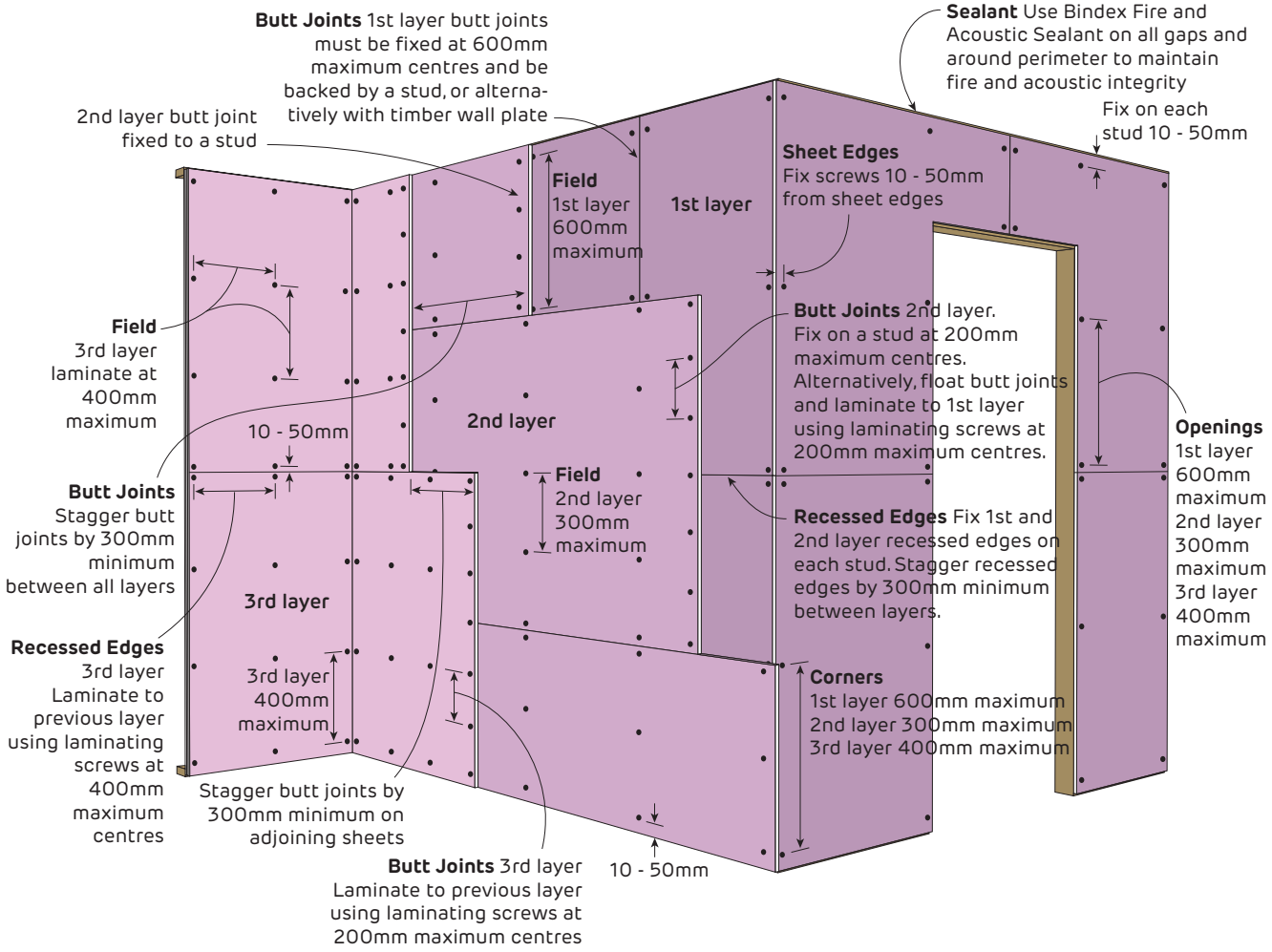

Fire Rated

Typical Details for External Timber Stud Walls

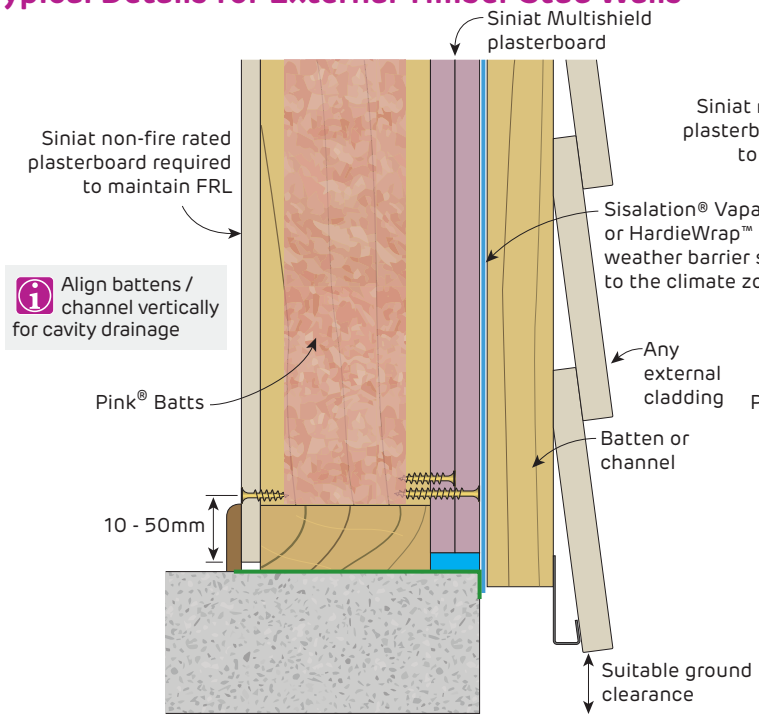

FIGURE 4 External Timber Stud Wall Base
With any external cladding over battens
Section

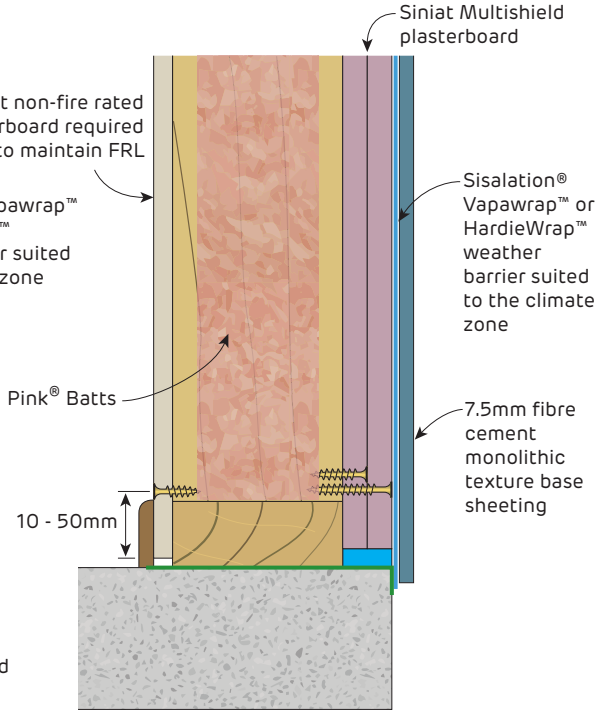

FIGURE 5 External Timber Stud Wall Base
With texture base fibre cement sheet
Section

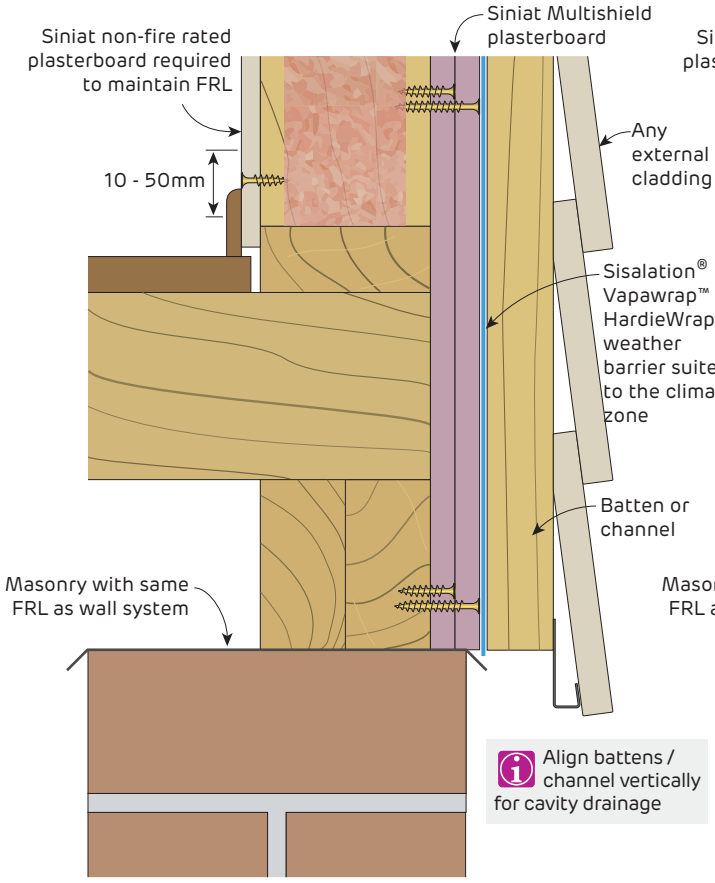

FIGURE 6 External Timber Wall Base with Sub-floor
With any external cladding over battens
For TSW491, TSW492, TSW494 and TSW495 only
Section

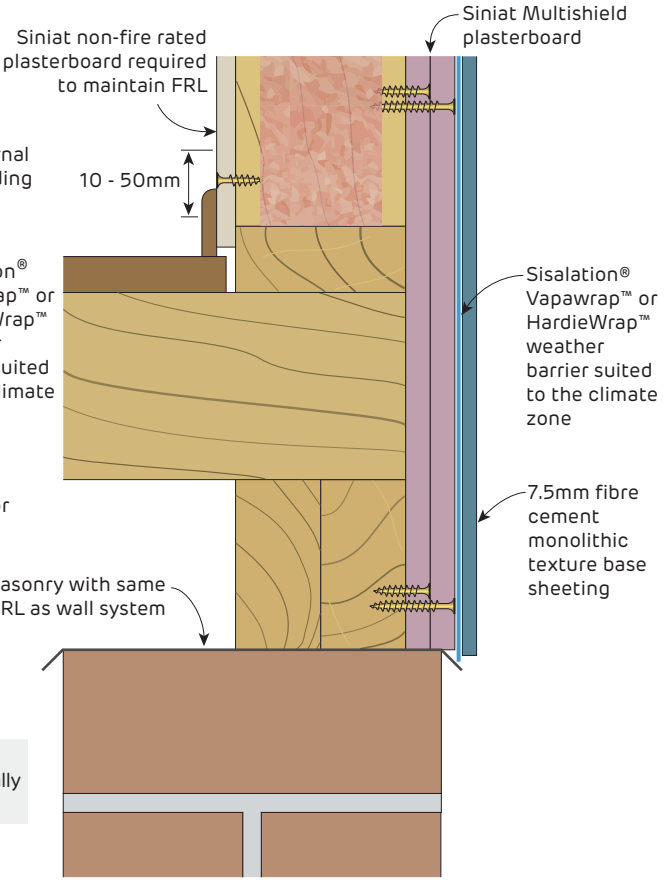

FIGURE 7 External Timber Wall Base with Sub-floor
With texture base fibre cement sheet
For TSW491, TSW492, TSW494 and TSW495 only
Section

Fire Rated

Typical Details for External Timber Stud Walls

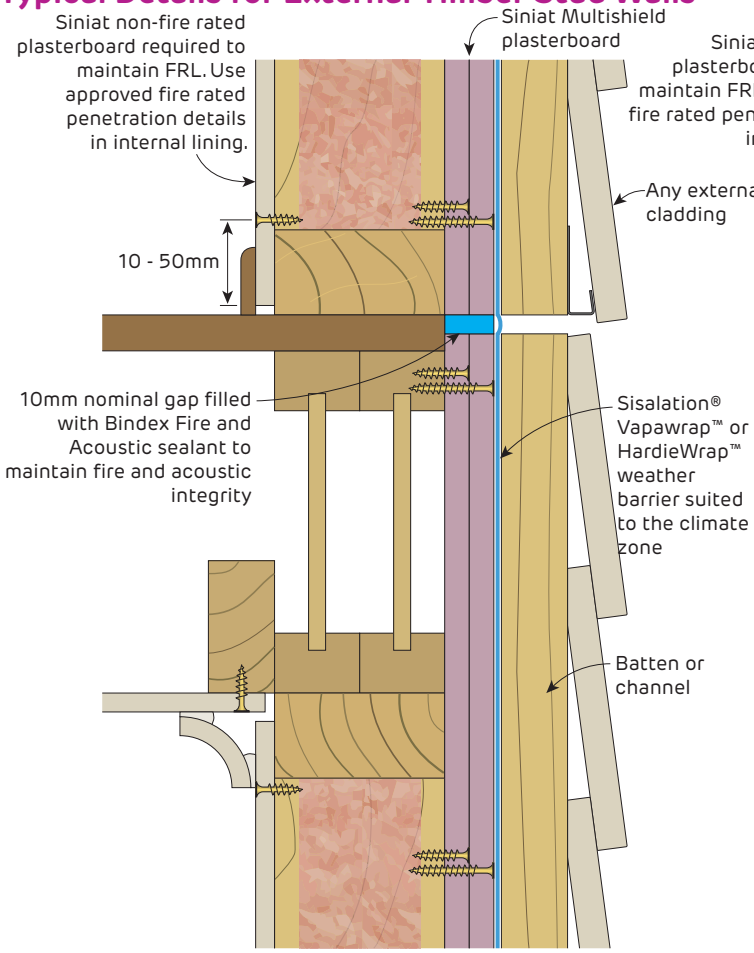

FIGURE 8 External Timber Wall with Suspended Floor
For TSW491, TSW492, TSW494 and TSW495 only
With any external cladding over battens
Section

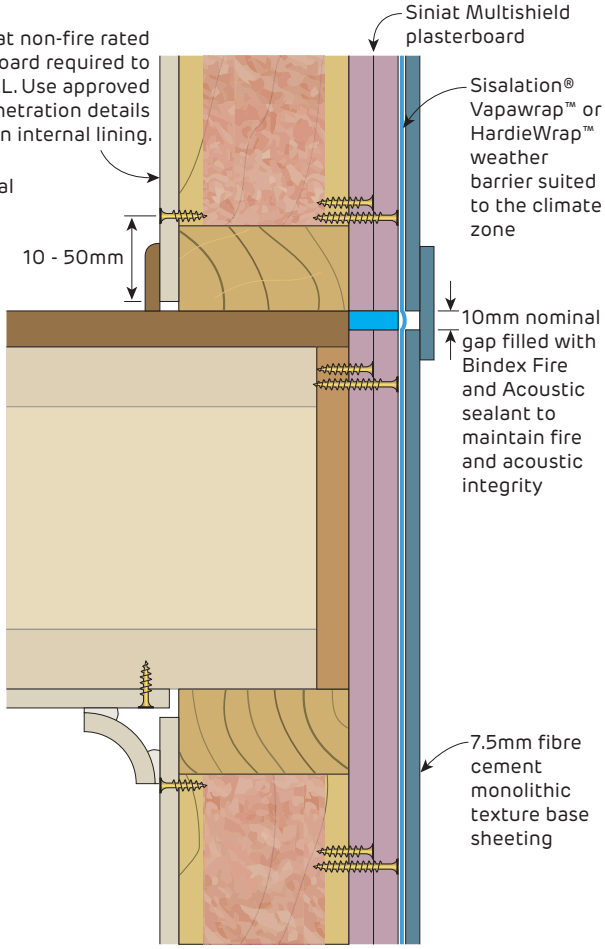

FIGURE 9 External Timber Wall with Suspended Floor
For TSW491, TSW492, TSW494 and TSW495 only
With texture base fibre cement sheet
Section

Fire Rated

Typical Details for External Timber Stud Walls

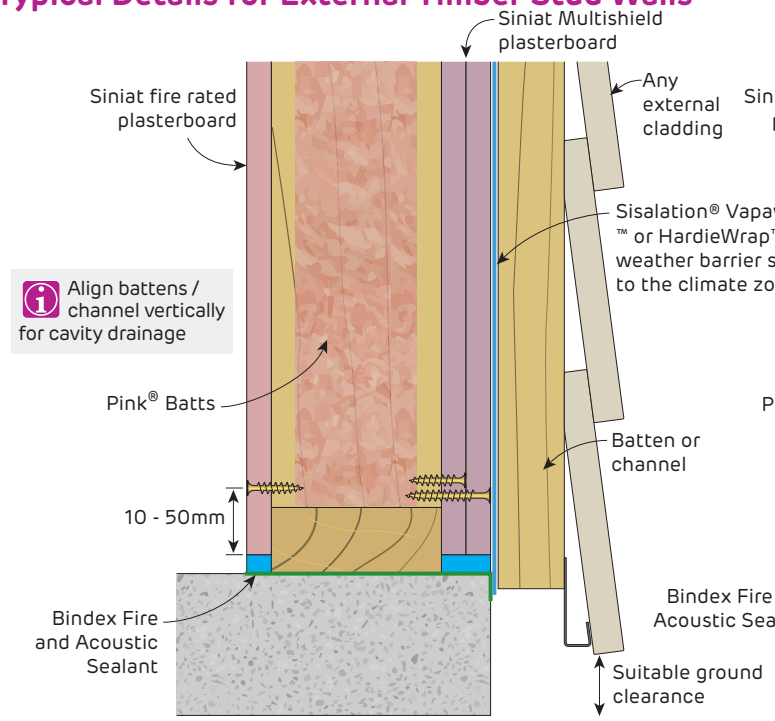

FIGURE 10 External Timber Stud Wall Base
With any external cladding over battens
Section

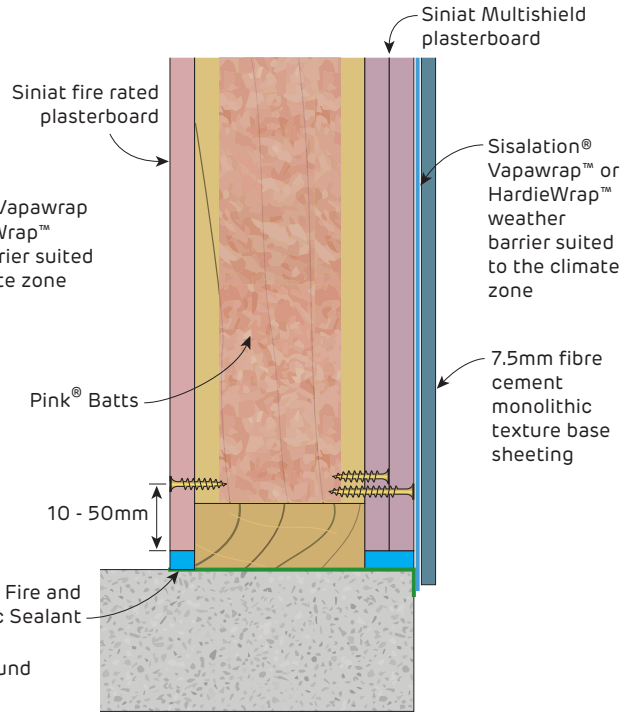

FIGURE 11 External Timber Stud Wall Base
With texture base fibre cement sheet
Section

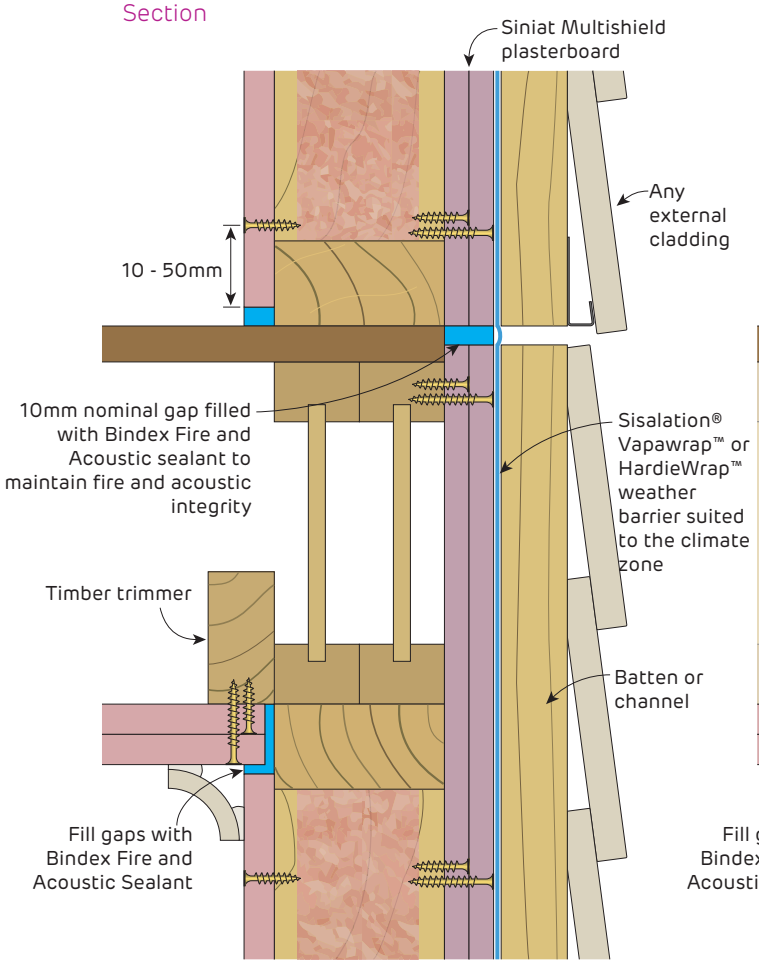

FIGURE 12 External Timber Wall with Suspended Floor
With any external cladding over battens
Section

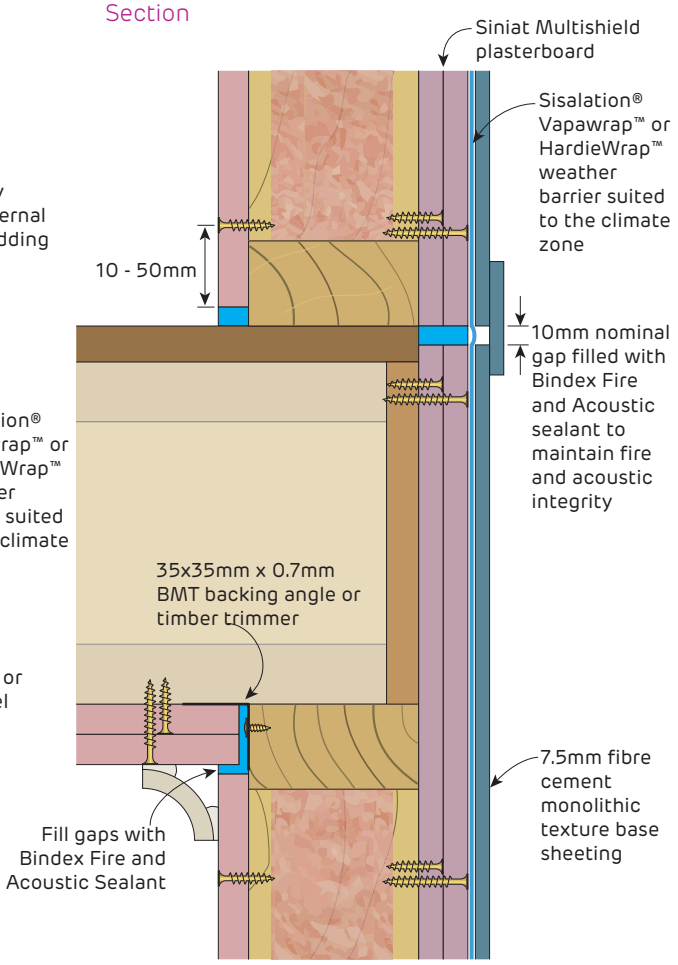

FIGURE 13 External Timber Wall with Suspended Floor
With texture base fibre cement sheet
Section

Fire Rated
Typical Details for External Timber Stud Walls

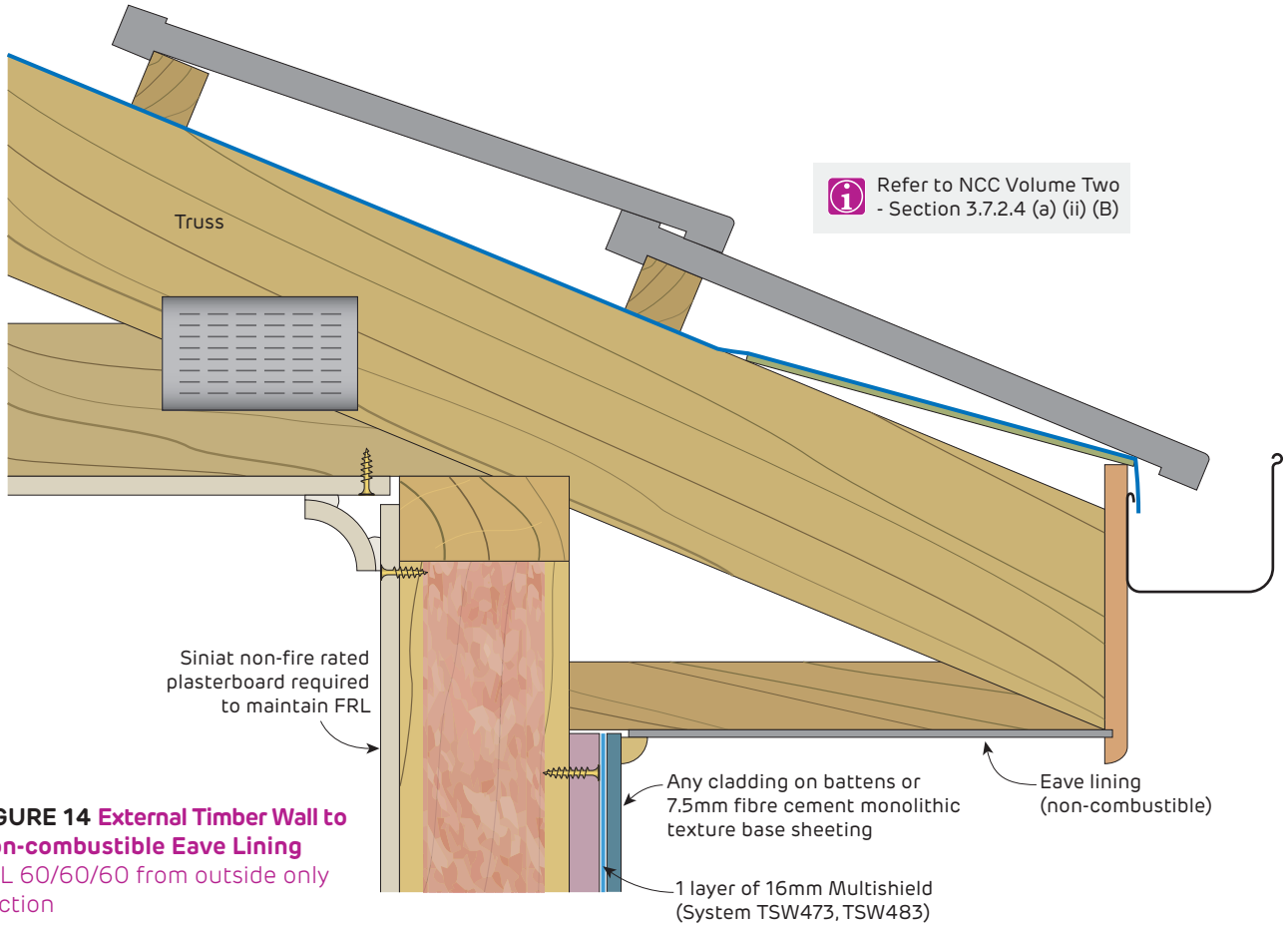

FIGURE 14 External Timber Wall to Non-combustible Eave Lining
FRL 60/60/60 from outside only
Section

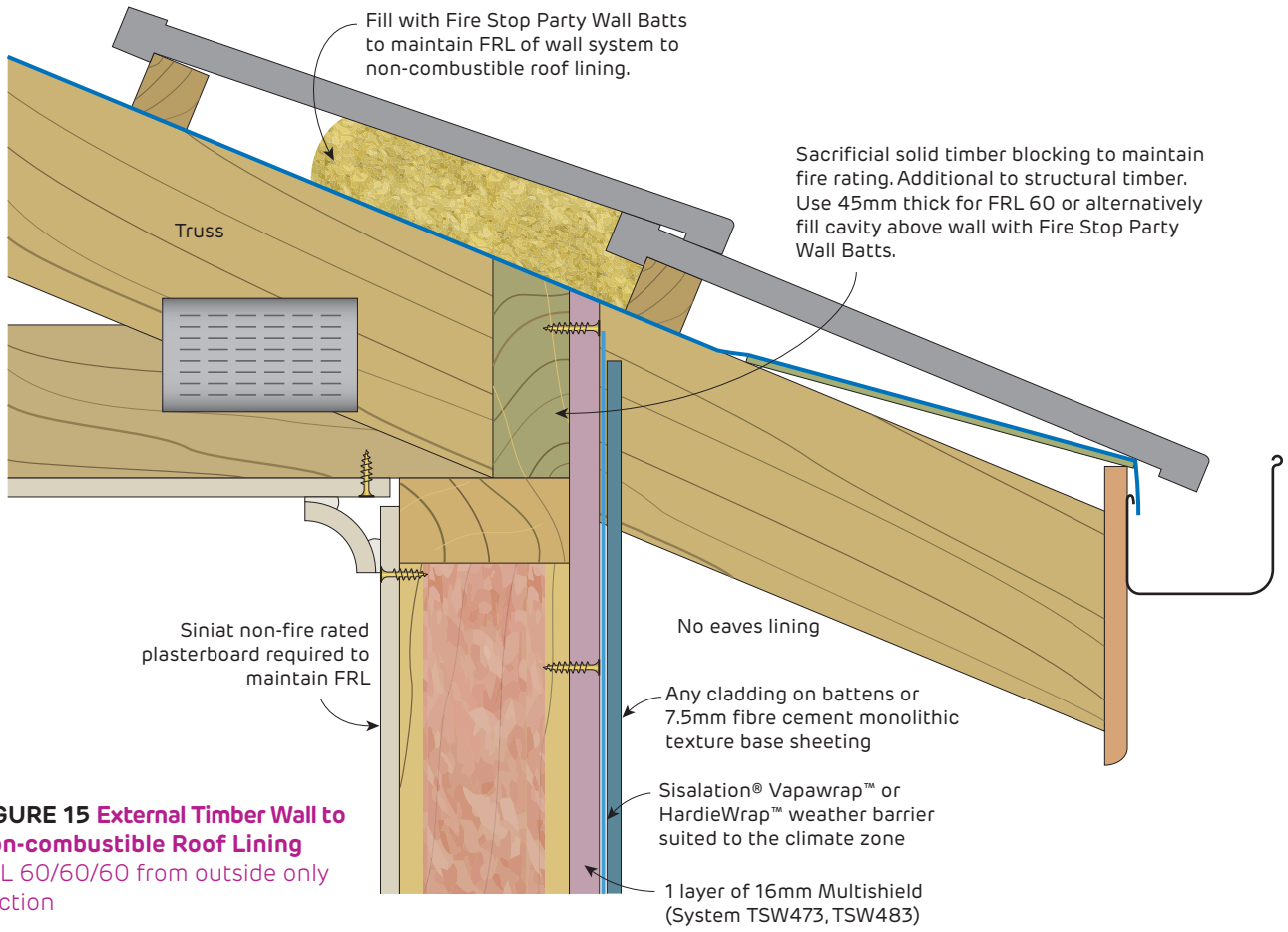

FIGURE 15 External Timber Wall to Non-combustible Roof Lining
FRL 60/60/60 from outside only
Section

Fire Rated
Typical Details for External Timber Stud Walls

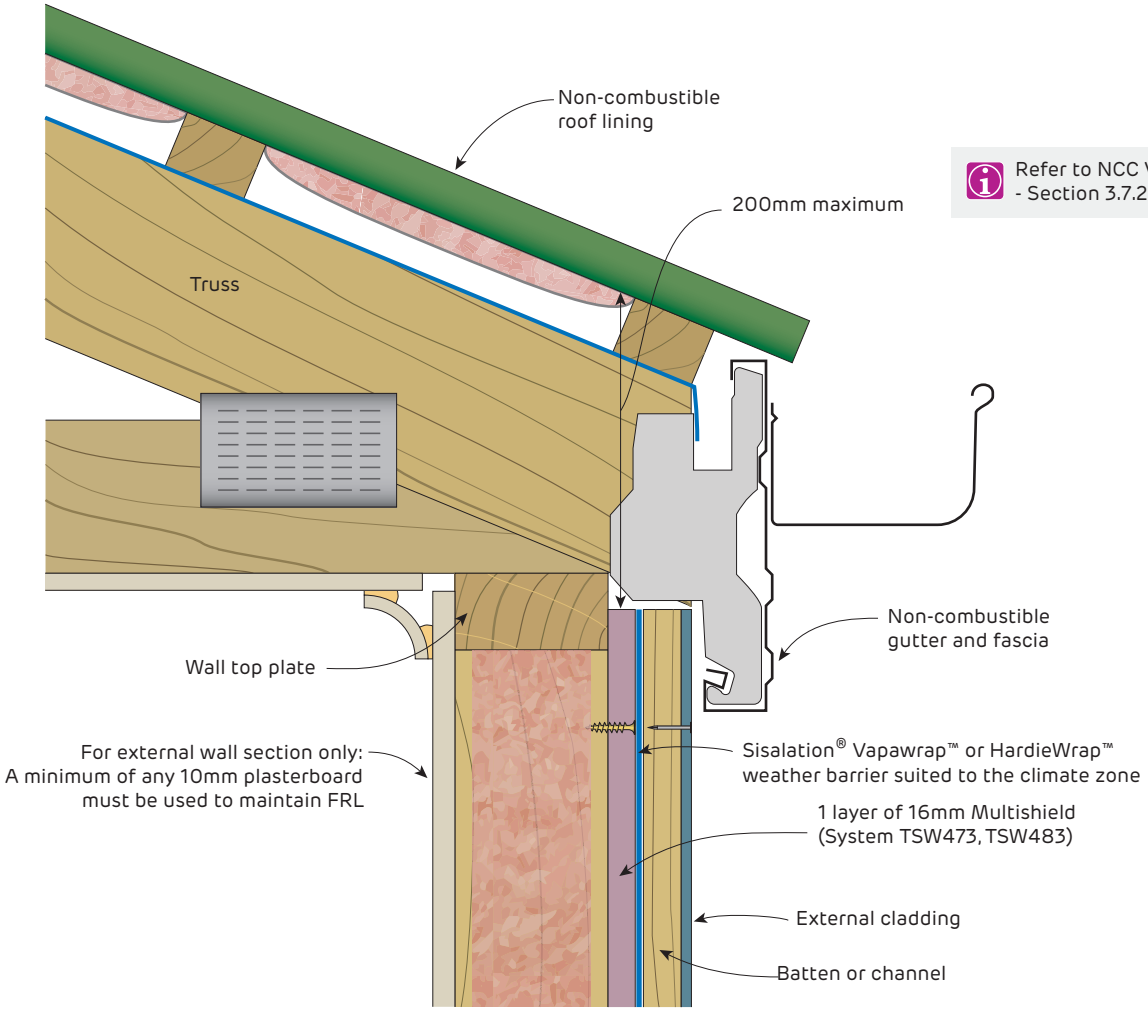

FIGURE 16 NCC Acceptable Construction Practice
FRL 60/60/60 from outside only
Section

Fire Rated
Typical Details for External Timber Stud Walls

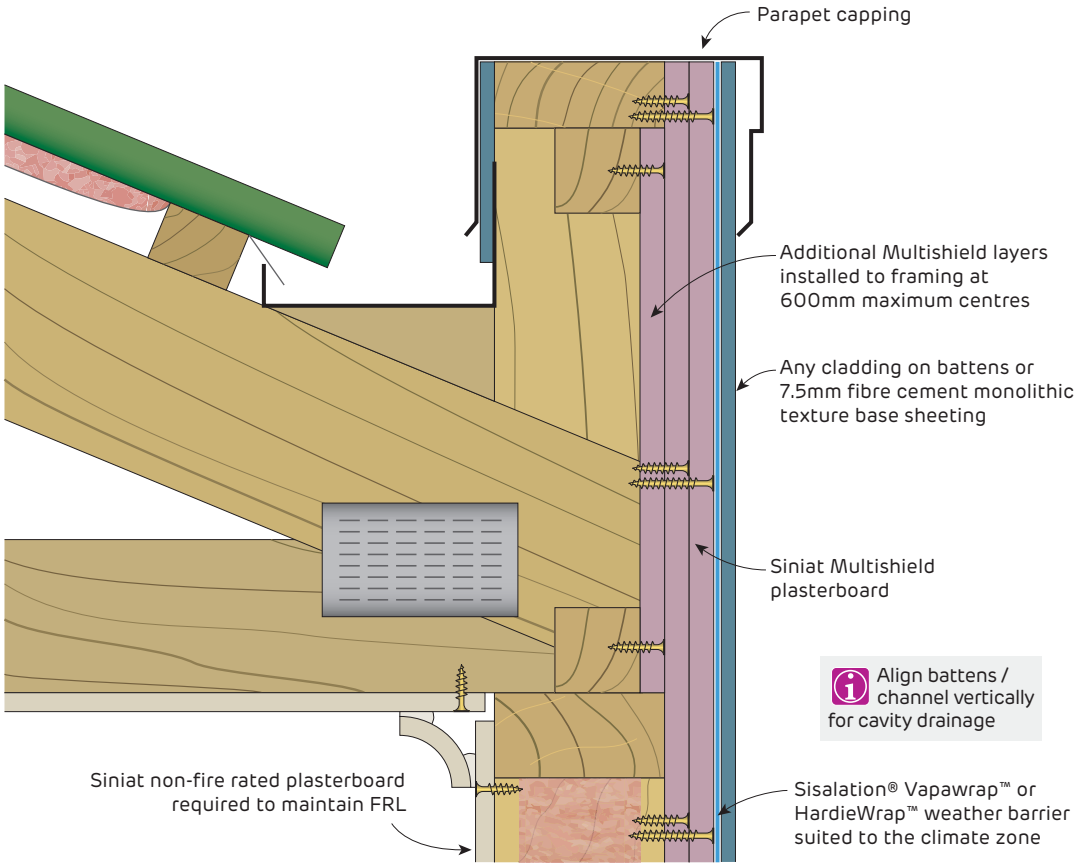

FIGURE 17 External Timber Wall to Non-combustible Roof Lining
Section

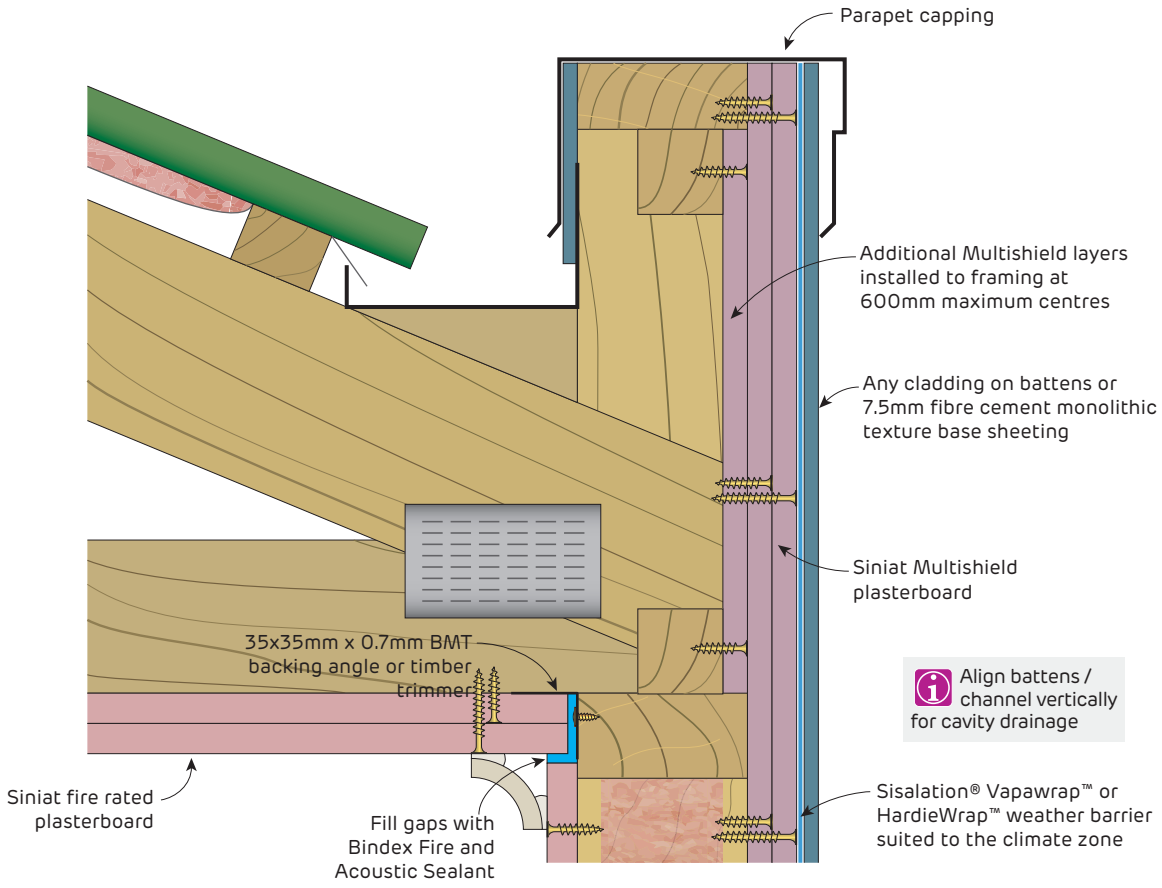

FIGURE 18 External Timber Wall to Non-combustible Roof Lining
Section

Fire Rated

Typical Details for External Timber Stud Walls

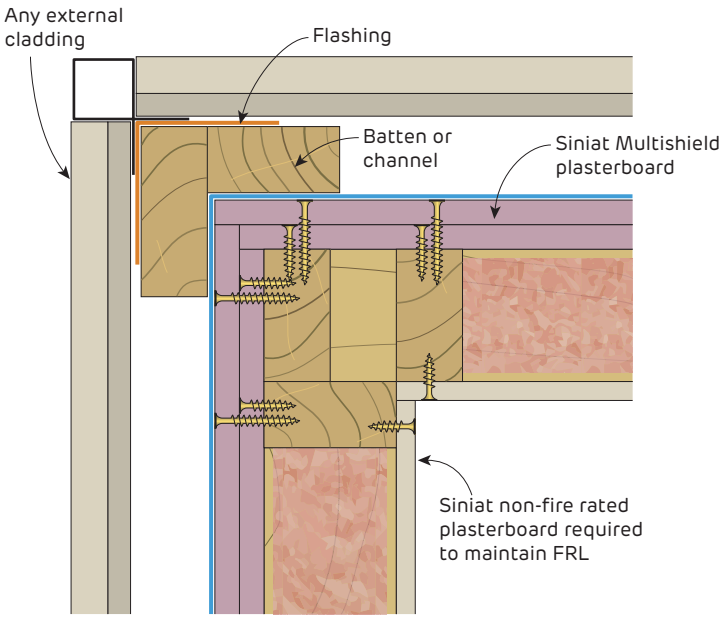

FIGURE 19 External Corner
Section

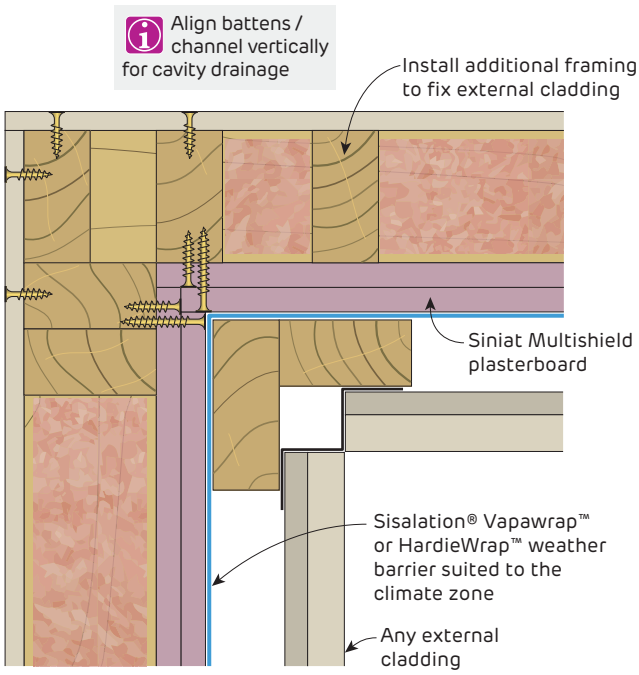

FIGURE 20 Internal Corner
Section

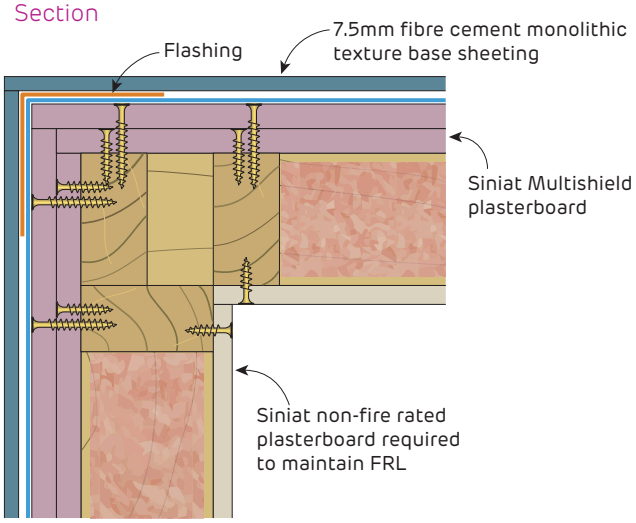

FIGURE 21 External Corner
Section

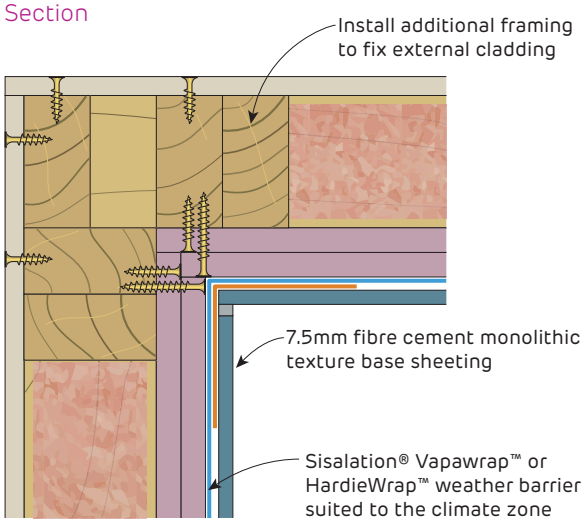

FIGURE 22 Internal Corner
Section

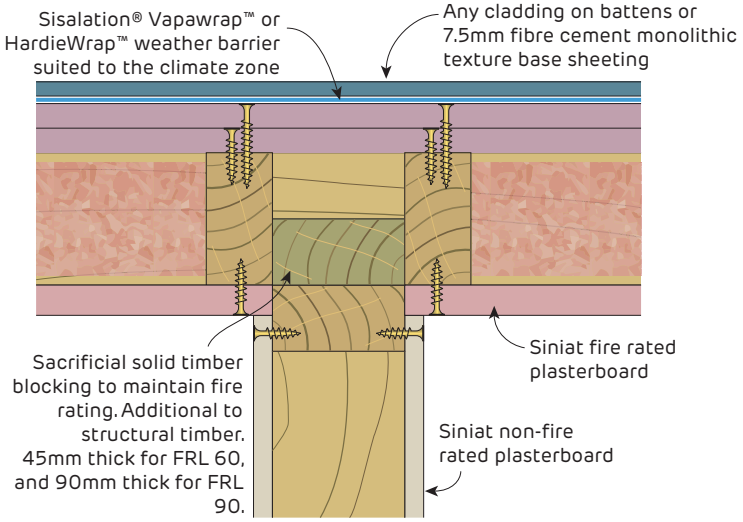

FIGURE 23 Intersecting Wall
Plan

Fire Rated
Typical Details for External Timber Stud Walls

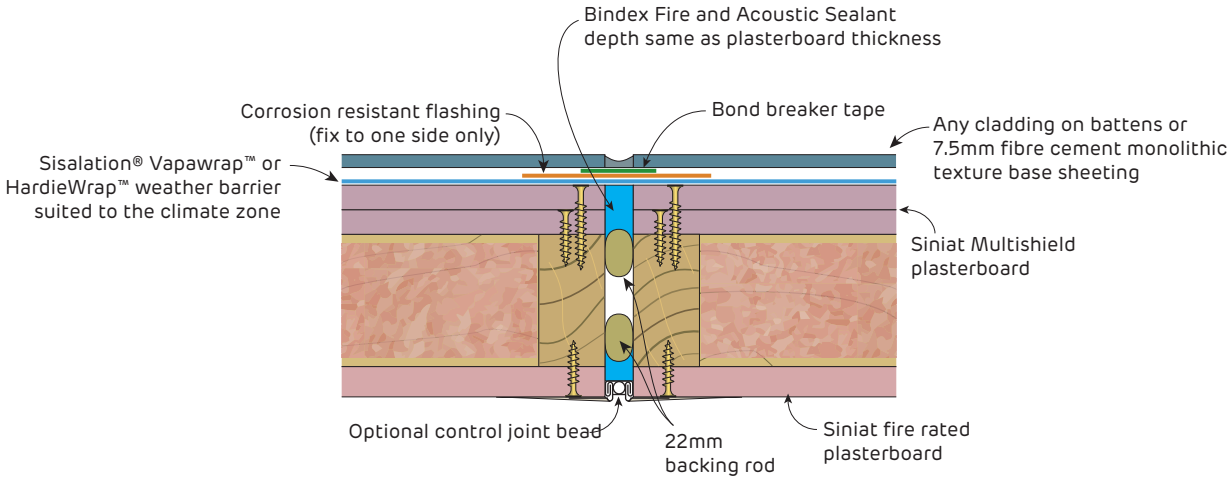

FIGURE 24 Control Joint
Plan



SYSTEMS	**433**
INSTALLATION	**434**
GENERAL REQUIREMENTS	434
FRAMING	434
PLASTERBOARD LAYOUT	435
PLASTERBOARD FIXING	435
EXTERIOR CLADDING	435
CONSTRUCTION DETAILS	**437**

4.4 External Steel Girt Walls

External structural steel walls with horizontal girts are used in buildings such as car parks, factories, industrial units and workshops. If these walls are built close to property boundaries, they often require fire protection from the outside.

Systems in this section provide fire protection from the outside for up to 120 minutes. **multi**shield forms part of the wall, which is covered by a moisture barrier and external cladding to provide protection from the weather.

SSW504

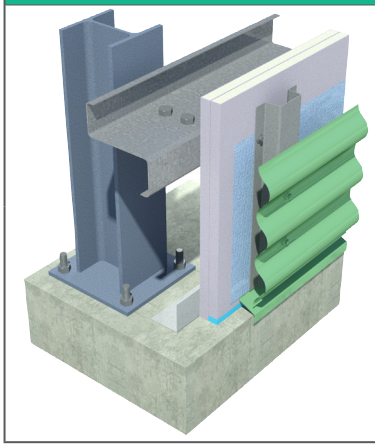

- Horizontal girts over structural steel columns
- 2 layers of 16mm **multi**shield
- Breathable wall wrap
- Top-Hats
- Exterior steel cladding

Fire Resistance Level

60/60/60
rated from the outside only

Report FAR 3998

Maximum Frame Spacing (mm)	Plasterboard Thickness (mm)	Sound Insulation Rw (Rw + Ctr)	
600	32	35 (31)	Report Day Design 3094-33

SSW502

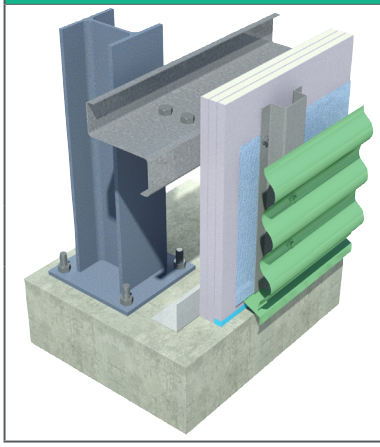

- Horizontal girts over structural steel columns
- 3 layers of 13mm **multi**shield
- Breathable wall wrap
- Top-Hats
- Exterior steel cladding

Fire Resistance Level

90/90/90
rated from the outside only

Report FAR 3998

Maximum Frame Spacing (mm)	Plasterboard Thickness (mm)	Sound Insulation Rw (Rw + Ctr)	
900	39	37 (34)	Report Day Design 3094-33

SSW505

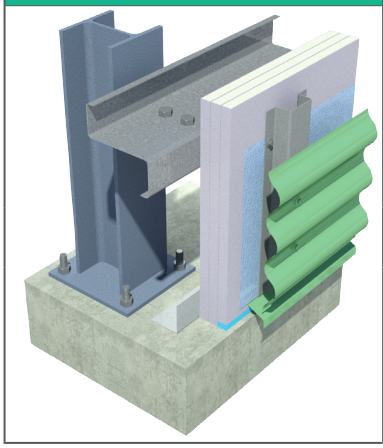

- Horizontal girts over structural steel columns
- 3 layers of 16mm **multi**shield
- Breathable wall wrap
- Top-Hats
- Exterior steel cladding

Fire Resistance Level

120/120/120
rated from the outside only

Report FAR 3998

Maximum Frame Spacing (mm)	Plasterboard Thickness (mm)	Sound Insulation Rw (Rw + Ctr)	
1200	49	38 (35)	Report Day Design 3094-33

General Requirements

	Fire Rated
Install control joints in plasterboard walls: > At 12m maximum intervals > At all control joints in the structure > At any change in the substrate	✓
Jointing of **multi**shield is not required due to the overlying wall wrap and external sheeting.	✓
Use approved fire rated penetration details. Fire penetrations may require fire collars or other devices to maintain fire performance.	✓
Pack any gaps between the top of the wall and the underside of the roof covering with mineral fibre or other suitable fire resisting material.	✓
Protect plasterboard from water pooling at ground level.	✓
Attach all fixtures to studs or purpose installed noggings. Wall anchors must not be fixed only to the plasterboard of fire rated walls.	✓

For acceptable modifications or variations to fire rated systems, refer to Section 2.3 Fire Resistance

Framing

	Fire Rated
Install 1.15mm BMT Steel Backing Angle to: > Base of wall > Internal for external corners of girts > Control joints	✓
Install an anti-splash board at the base of the wall to protect the plasterboard from water damage (Refer to Details)	✓
Framing members as per framing table or structural design up to 600mm maximum.	✓
Refer to Section 4.5 for information on Top-Hat framing.	✓

Plasterboard Layout

	Fire Rated
Install plasterboard sheets perpendicular to framing	✓
Stagger butt joints by 600mm minimum on adjoining sheets and between layers	✓
First layer butt joints must be back-blocked by framing.	✓
Stagger recessed edges by 300mm minimum between layers.	✓

If a jointed finish on the interior of the wall is desired, face the first layer inwards.

Plasterboard Fixing

	Fire Rated
Use the 'Screw Only Method' in tiled or fire rated areas. Stud adhesive is not permitted.	✓
Drive screws to just below the sheet surface, taking care not to break the paper linerboard. For over-driven screws, install another screw 20mm away. Leave or remove the over-driven screw and patch.	✓
Laminating screws can be used to fix the second and third layer.	✓

Screw Type and Minimum Size for the Installation of Plasterboard to Steel

Plasterboard Thickness	1st Layer	2nd Layer	3rd Layer
13mm	6g x 25mm screw	6g x 41mm screw *	7g x 57mm screw *
16mm	6g x 32mm screw	6g x 45mm screw *	8g x 65mm screw *

For steel ≤ 0.75mm BMT, use fine thread needle point screws.
For steel ≥ 0.75mm BMT, use fine thread drill point screws.
*10g x 38mm Laminating screws may be used as detailed in installation diagrams.

Exterior Cladding

	Fire Rated
Fix top hats through the **multi**shield to the steel girts behind.	✓

- Exterior cladding and moisture barrier must provide protection from the weather.
- Use construction techniques that direct condensation and rain away from plasterboard.
- Siniat recommends a drained cavity between the external sheeting and the **multi**shield for weathertightness and durability.
- Top hats between external cladding and external plasterboard do not change the FRL of the system.

FIGURE 1 Fire Rated 2 Layers - Vertical + Vertical
Screw Only Method

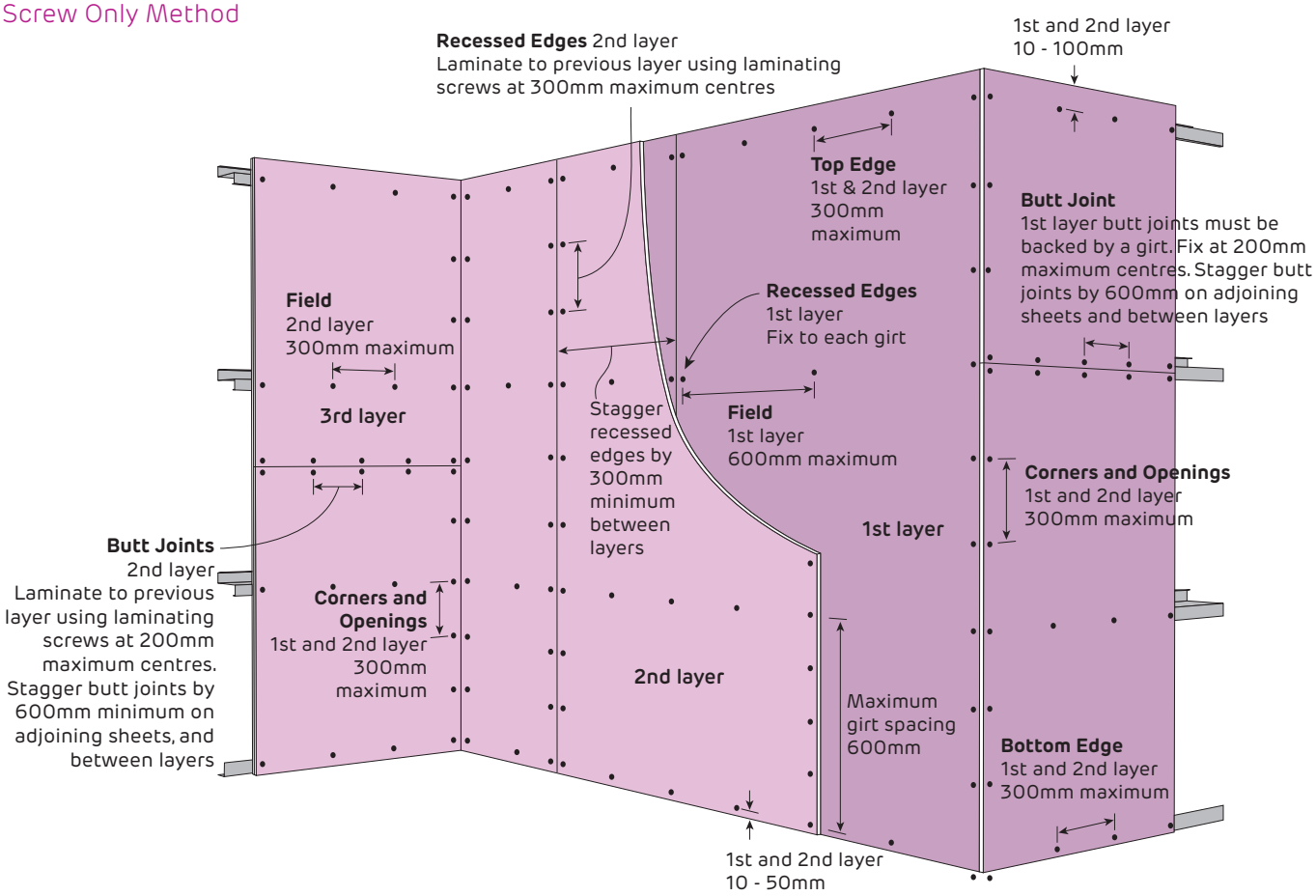

FIGURE 2 Fire Rated 3 Layers - Vertical + Vertical + Vertical
Screw Only Method

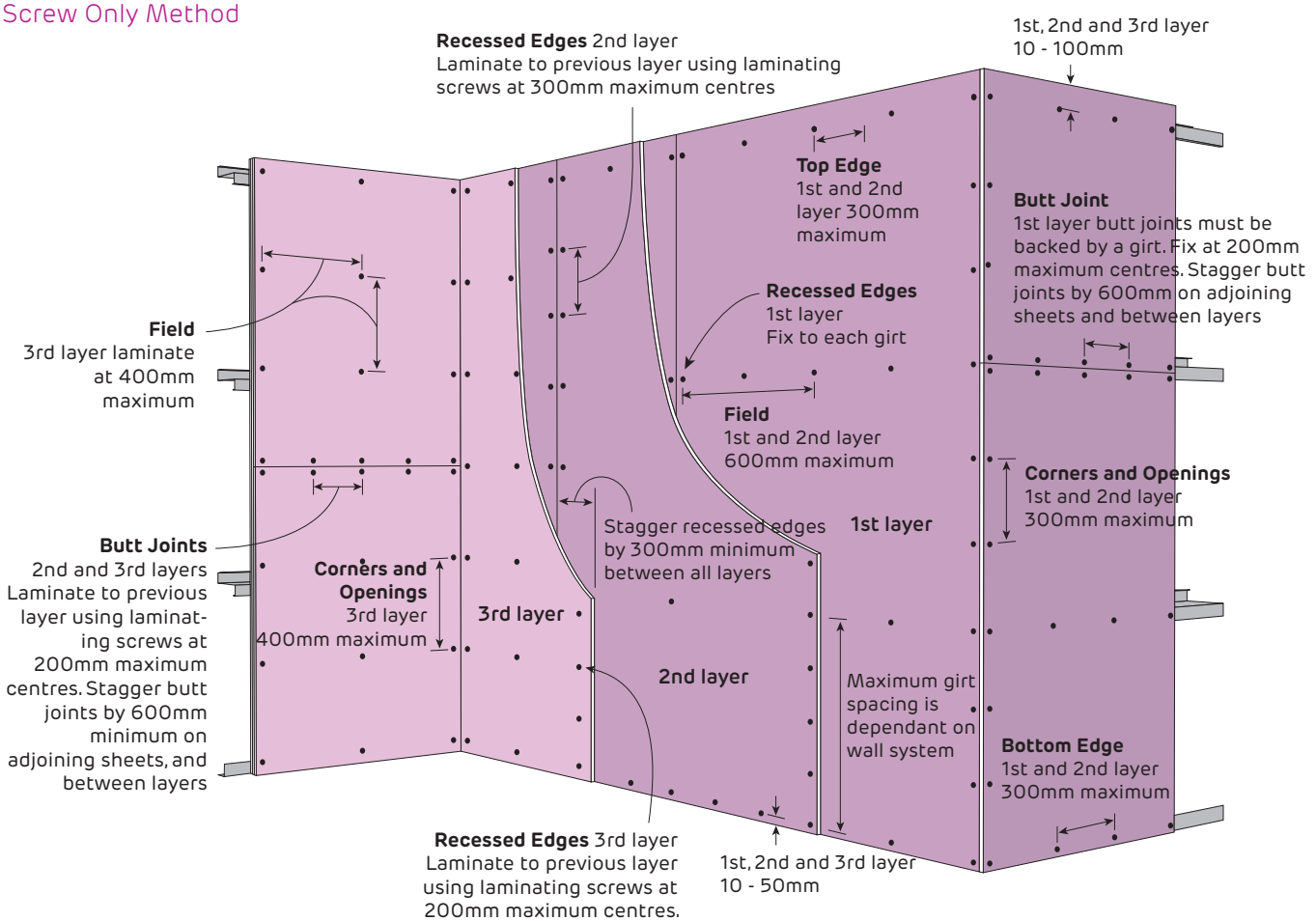

Fire Rated

Typical Head and base Details for External Steel Girt Walls

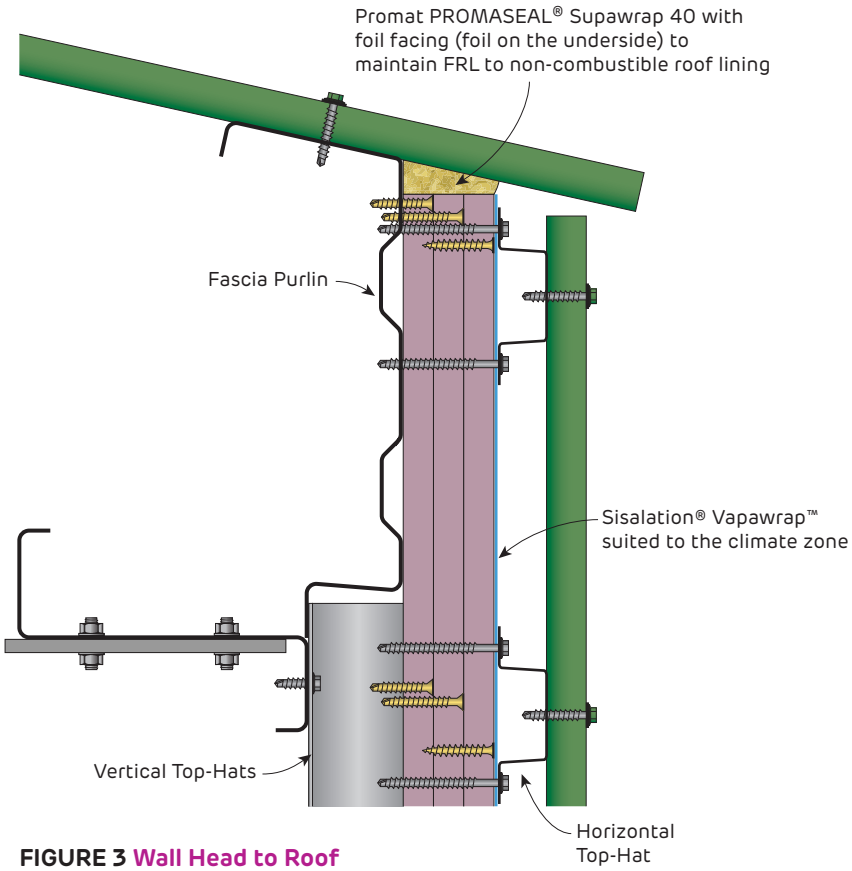

FIGURE 3 Wall Head to Roof
Section

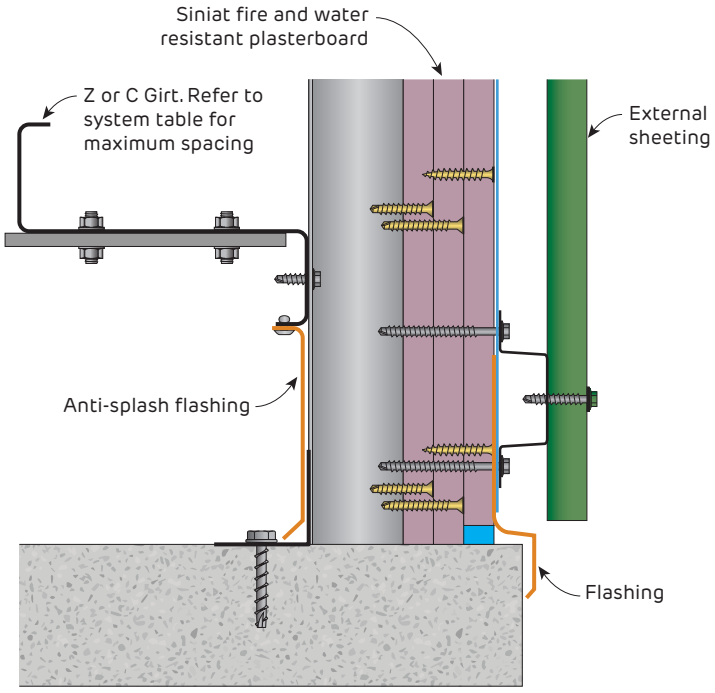

FIGURE 4 Wall Base to Slab
Section

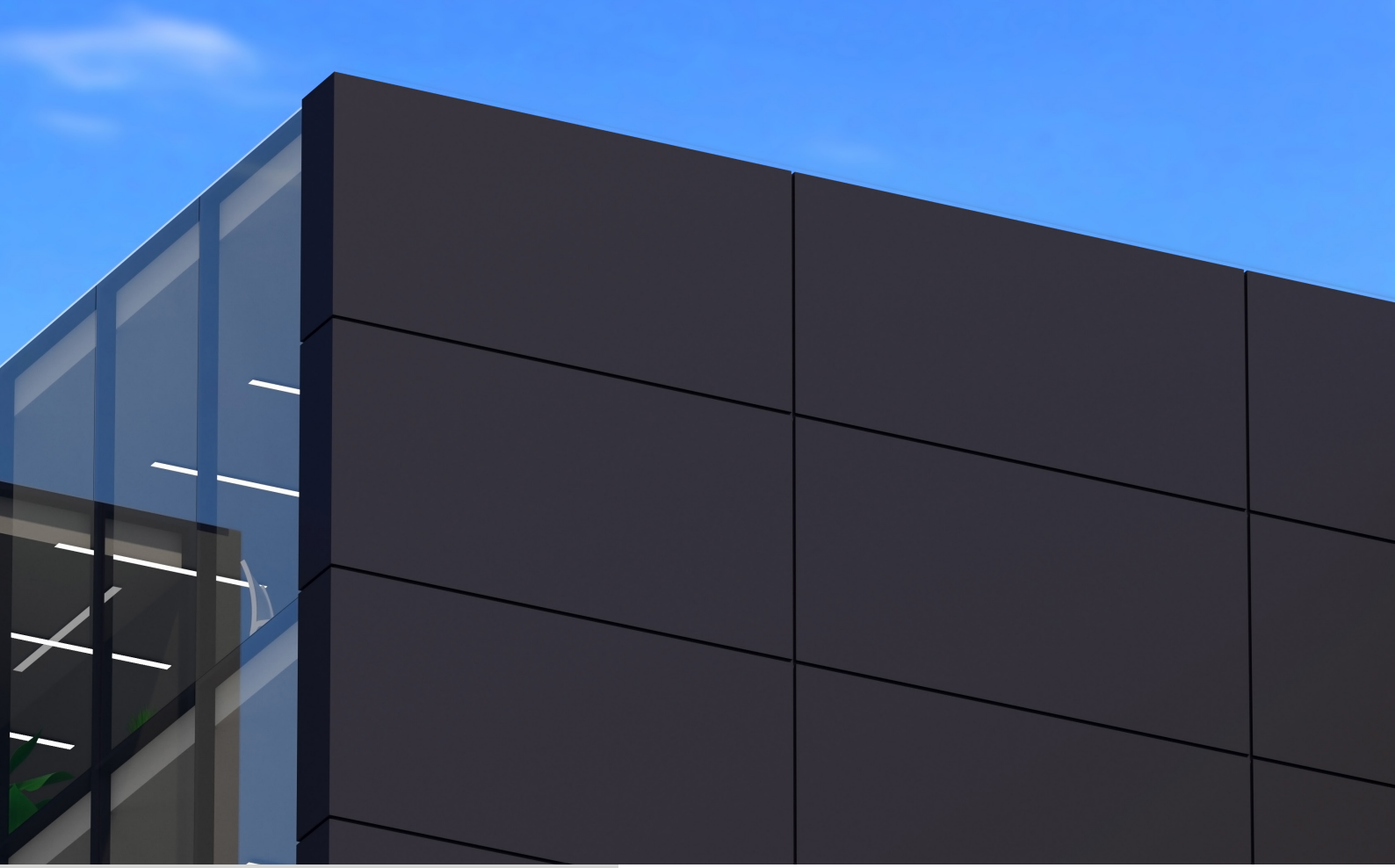

INSTALLATION **439**

FRAMING 439

VERTICAL TOP HATS OVER HORIZONTAL FRAMING 439

HORIZONTAL TOP HATS OVER STUD FRAMING 444

HORIZONTAL + VERTICAL TOP HATS OVER STUD FRAMING 448

STEEL PROFILE INFORMATION 449

CONSTRUCTION DETAILS **450**

4.5 Top Hats over Wall Framing

Top Hats are an effective means of providing structural framing behind various types of external cladding such as expressed jointed fibre cement, rendered and pre-finished fibre cement, timber cladding, aerated concrete panels (AAC) and steel sheeting. Siniat Top Hats are durable and come with industry leading Zincalume AM150 corrosion protection.

Top Hats may be installed horizontally over stud wall framing which suits metal sheeting and AAC. When vertical framing is desired for certain external cladding like expressed jointed fibre cement, top hats can be installed vertically over stud framing with top hat cleats, or first by providing a layer of horizontal top hats over the stud framing, followed by a layer of vertical top hats.

Details in this manual show how Top Hats can be installed to promote drying and ventilation in the cavity behind the external cladding which helps for long lasting external wall systems. When installed horizontally, Siniat Top Hats come with sloping flanges to re-direct moisture towards the outside and away from the inside of a building. When installed vertically, Siniat Top Hats provide free drainage to the bottom of the wall cavity.

Framing

Vertical Top Hats over Horizontal Framing

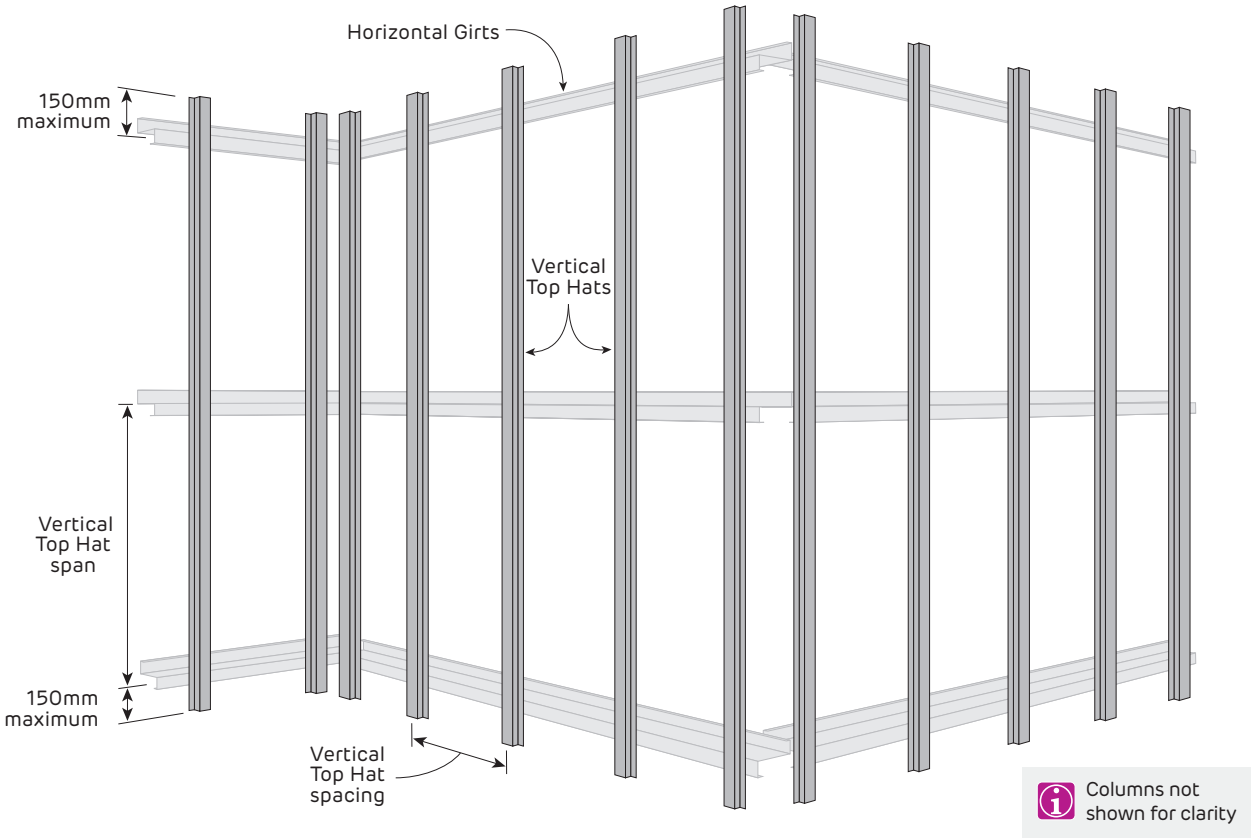

FIGURE 1 Vertical Steel Top Hat Layout

Table 1 Vertical 50x15x1.15 Top Hat Span Table (mm)

	Span type	Top Hat spacing (mm)	Ultimate Wind Pressure W_u (kPa)						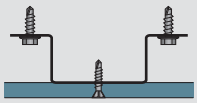		
			1.0	1.5	2.0	2.5	3.0	3.5	4.0	5.0	6.0
Serviceability deflection limit Span / 250	Single span	600	870	760	690	640	600	570	550	510	470
		450	960	840	760	710	660	630	600	560	530
		400	1000	870	790	730	690	660	630	580	550
		300	1100	960	870	810	760	720	690	640	600
	2 or more spans	600	920	800	720	660	620	590	560	510	470
		450	1020	880	800	740	690	650	620	570	530
		400	1070	920	830	770	720	680	650	600	560
		300	1190	1020	920	850	800	760	720	660	620
Serviceability deflection limit Span / 360	Single span	600	770	670	610	570	530	510	480	450	420
		450	850	740	670	620	590	560	530	490	460
		400	880	770	700	650	610	580	550	510	480
		300	970	850	770	720	670	640	610	570	530
	2 or more spans	600	920	800	720	660	620	590	560	510	470
		450	1020	880	800	740	690	650	620	570	530
		400	1070	920	830	770	720	680	650	600	560
		300	1190	1020	920	850	800	760	720	660	620

Table 2 Vertical 50x25x1.15 Top Hat Span Table (mm)

	Span type	Top Hat spacing (mm)	Ultimate Wind Pressure W_u (kPa)						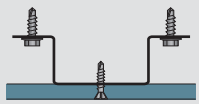		
			1.0	1.5	2.0	2.5	3.0	3.5	4.0	5.0	6.0
Serviceability deflection limit Span / 250	Single span	600	1260	1110	1020	960	900	860	820	760	720
		450	1390	1220	1110	1040	990	940	900	840	790
		400	1440	1260	1160	1080	1020	980	940	880	820
		300	1590	1390	1260	1180	1110	1060	1020	960	900
	2 or more spans	600	1260	1110	1020	960	900	830*	730*	580*	480*
		450	1390	1220	1110	1040	990	940	900	780*	650*
		400	1440	1260	1160	1080	1020	980	940	870*	730*
		300	1590	1390	1260	1180	1110	1060	1020	960	900
Serviceability deflection limit Span / 360	Single span	600	1210	1050	960	890	840	790	760	700	660
		450	1330	1160	1050	980	920	870	840	780	730
		400	1380	1210	1100	1020	960	910	870	810	760
		300	1520	1330	1210	1120	1050	1000	960	890	840
	2 or more spans	600	1260	1110	1020	960	900	830*	730*	580*	480*
		450	1390	1220	1110	1040	990	940	900	780*	650*
		400	1440	1260	1160	1080	1020	980	940	870*	730*
		300	1590	1390	1260	1180	1110	1060	1020	960	900

*Limited by 2x10g Hex-head screw connection capacity.

1. Check maximum cladding span and fastener spacing requirements from the manufacturer's literature. Maximum cladding weight 22 kg/m^2.
2. Tables include self weight and uniformly distributed lateral pressures. Point loads or live loads are not considered.
3. Tables refer to Siniat Top Hats of grade G300 steel with Zincalume™ AM150 corrosion protection.
4. All Top Hats must be supported 150mm maximum from ends.
5. Calculations based upon either single span or 2-or-more spans, designed in accordance with *AS/NZS 4600:2018 Cold Formed Steel Structures.*
6. Wind pressures determined in accordance with *AS/NZS 1170.2 Wind Actions.*
7. Ultimate Load Case 1: 1.2G + Wu
8. Serviceability Load Case 1: G + Ws, with deflection limited to span/250 or span/360. Serviceability pressure taken as 65% of ultimate wind pressure suitable for Region A and Region B.
9. Connections checked using 2 x 10g hex-head screws into minimum 1.0mm BMT G550 steel or minimum 1.5mm BMT G450 steel (purlins or girts). Contact Siniat if fixing to a different substrate for the possibility of spanning further.
10. Splicing of Top Hats is not permitted.
11. Do not use tables for vertical top hats over horizontal top hat construction.
12. The nominated lateral pressures and deflection limits must be checked for suitability for a specific project.

Table 3 Vertical 50x35x1.15 or 75x35x1.15 or 120x35x1.15 Top Hat Span Table (mm)

	Span type	Top Hat spacing (mm)	Ultimate Wind Pressure W_u (kPa)						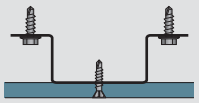		
			1.0	1.5	2.0	2.5	3.0	3.5	4.0	5.0	6.0
Serviceability deflection limit Span / 250	Single span	600	1470	1300	1200	1130	1070	1020	980	910	850
		450	1610	1420	1300	1220	1160	1110	1070	1000	940
		400	1660	1470	1350	1270	1200	1150	1110	1040	980
		300	1820	1610	1470	1380	1300	1250	1200	1130	1070
	2 or more spans	600	1470	1300	1200	1130	970*	830*	730*	580*	480*
		450	1610	1420	1300	1220	1160	1110	970*	780*	650*
		400	1660	1470	1350	1270	1200	1150	1090*	870*	730*
		300	1820	1610	1470	1380	1300	1250	1200	1130	970*
Serviceability deflection limit Span / 360	Single span	600	1470	1300	1200	1130	1070	1010	970	900	850
		450	1610	1420	1300	1220	1160	1110	1070	990	930
		400	1660	1470	1350	1270	1200	1150	1110	1030	970
		300	1820	1610	1470	1380	1300	1250	1200	1130	1070
	2 or more spans	600	1470	1300	1200	1130	970*	830*	730*	580*	480*
		450	1610	1420	1300	1220	1160	1110	970*	780*	650*
		400	1660	1470	1350	1270	1200	1150	1090*	870*	730*
		300	1820	1610	1470	1380	1300	1250	1200	1130	970*

Table 4 Vertical 50x50x1.15 Top Hat Span Table (mm)

	Span type	Top Hat spacing (mm)	Ultimate Wind Pressure W_u (kPa)						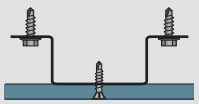		
			1.0	1.5	2.0	2.5	3.0	3.5	4.0	5.0	6.0
Serviceability deflection limit Span / 250	Single span	600	1790	1600	1480	1390	1330	1270	1230	1150	1090
		450	1950	1740	1600	1510	1430	1370	1330	1250	1190
		400	2010	1790	1650	1560	1480	1420	1370	1290	1230
		300	2190	1950	1790	1680	1600	1530	1480	1390	1330
	2 or more spans	600	1790	1600	1460*	1170*	970*	830*	730*	580*	480*
		450	1950	1740	1600	1510	1300*	1110*	970*	780*	650*
		400	2010	1790	1650	1560	1460*	1250*	1090*	870*	730*
		300	2190	1950	1790	1680	1600	1530	1460*	1170*	970*
Serviceability deflection limit Span / 360	Single span	600	1790	1600	1480	1390	1330	1270	1230	1150	1090
		450	1950	1740	1600	1510	1430	1370	1330	1250	1190
		400	2010	1790	1650	1560	1480	1420	1370	1290	1230
		300	2190	1950	1790	1680	1600	1530	1480	1390	1330
	2 or more spans	600	1790	1600	1460*	1170*	970*	830*	730*	580*	480*
		450	1950	1740	1600	1510	1300*	1110*	970*	780*	650*
		400	2010	1790	1650	1560	1460*	1250*	1090*	870*	730*
		300	2190	1950	1790	1680	1600	1530	1460*	1170*	970*

*Limited by 2x10g Hex-head screw connection capacity.

1. Check maximum cladding span and fastener spacing requirements from the manufacturer's literature. Maximum cladding weight 22 kg/m^2.
2. Tables include self weight and uniformly distributed lateral pressures. Point loads or live loads are not considered.
3. Tables refer to Siniat Top Hats of grade G300 steel with Zincalume™ AM150 corrosion protection.
4. All Top Hats must be supported 150mm maximum from ends.
5. Calculations based upon either single span or 2-or-more spans, designed in accordance with *AS/NZS 4600:2018 Cold Formed Steel Structures.*
6. Wind pressures determined in accordance with *AS/NZS 1170.2 Wind Actions.*
7. Ultimate Load Case 1: 1.2G + Wu
8. Serviceability Load Case 1: G + Ws, with deflection limited to span/250 or span/360. Serviceability pressure taken as 65% of ultimate wind pressure suitable for Region A and Region B.
9. Connections checked using 2 x 10g hex-head screws into minimum 1.0mm BMT G550 steel or minimum 1.5mm BMT G450 steel (purlins or girts). Contact Siniat if fixing to a different substrate for the possibility of spanning further.
10. Splicing of Top Hats is not permitted.
11. Do not use tables for vertical top hats over horizontal top hat construction.
12. The nominated lateral pressures and deflection limits must be checked for suitability for a specific project.

Table 5 Vertical 50x15x0.75 Top Hat Span Table (mm)

	Span type	Top Hat spacing (mm)	Ultimate Wind Pressure W_u (kPa)						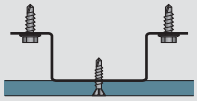		
			1.0	1.5	2.0	2.5	3.0	3.5	4.0	5.0	6.0
Serviceability deflection limit Span / 250	Single span	600	720	640	580	540	510	480	460	420	380
		450	780	690	640	600	560	530	510	470	440
		400	810	720	660	620	580	550	530	490	460
		300	880	780	720	670	640	610	580	540	510
	2 or more spans	600	720	640	580	540	510	480	460	420	380
		450	780	690	640	600	560	530	510	470	440
		400	810	720	660	620	580	550	530	490	460
		300	880	780	720	670	640	610	580	540	510
Serviceability deflection limit Span / 360	Single span	600	670	580	530	490	460	440	420	390	370
		450	740	640	580	540	510	480	460	430	400
		400	760	670	610	560	530	500	480	450	420
		300	840	740	670	620	580	550	530	490	460
	2 or more spans	600	720	640	580	540	510	480	460	420	380
		450	780	690	640	600	560	530	510	470	440
		400	810	720	660	620	580	550	530	490	460
		300	880	780	720	670	640	610	580	540	510

Table 6 Vertical 50x25x0.75 Top Hat Span Table (mm)

	Span type	Top Hat spacing (mm)	Ultimate Wind Pressure W_u (kPa)						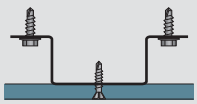		
			1.0	1.5	2.0	2.5	3.0	3.5	4.0	5.0	6.0
Serviceability deflection limit Span / 250	Single span	600	1040	930	850	790	740	700	670	610	570
		450	1120	1010	930	870	820	780	740	680	640
		400	1160	1040	960	900	850	810	780	710	670
		300	1260	1120	1040	980	930	890	850	790	740
	2 or more spans	600	1040	930	850	790	740	700	670	580*	480*
		450	1120	1010	930	870	820	780	740	680	640
		400	1160	1040	960	900	850	810	780	710	670
		300	1260	1120	1040	980	930	890	850	790	740
Serviceability deflection limit Span / 360	Single span	600	1040	910	830	770	720	690	660	610	570
		450	1120	1010	910	850	800	760	720	670	630
		400	1160	1040	950	880	830	790	750	700	660
		300	1260	1120	1040	970	910	870	830	770	720
	2 or more spans	600	1040	930	850	790	740	700	670	580*	480*
		450	1120	1010	930	870	820	780	740	680	640
		400	1160	1040	960	900	850	810	780	710	670
		300	1260	1120	1040	980	930	890	850	790	740

*Limited by 2x10g Hex-head screw connection capacity.

1. Check maximum cladding span and fastener spacing requirements from the manufacturer's literature. Maximum cladding weight 22 kg/m^2.
2. Tables include self weight and uniformly distributed lateral pressures. Point loads or live loads are not considered.
3. Tables refer to Siniat Top Hats of grade G300 steel with Zincalume™ AM150 corrosion protection.
4. All Top Hats must be supported 150mm maximum from ends.
5. Calculations based upon either single span or 2-or-more spans, designed in accordance with *AS/NZS 4600:2018 Cold Formed Steel Structures.*
6. Wind pressures determined in accordance with *AS/NZS 1170.2 Wind Actions.*
7. Ultimate Load Case 1: 1.2G + Wu
8. Serviceability Load Case 1: G + Ws, with deflection limited to span/250 or span/360. Serviceability pressure taken as 65% of ultimate wind pressure suitable for Region A and Region B.
9. Connections checked using 2 x 10g hex-head screws into minimum 1.0mm BMT G550 steel or minimum 1.5mm BMT G450 steel (purlins or girts). Contact Siniat if fixing to a different substrate for the possibility of spanning further.
10. Splicing of Top Hats is not permitted.
11. Do not use tables for vertical top hats over horizontal top hat construction.
12. The nominated lateral pressures and deflection limits must be checked for suitability for a specific project.

Table 7 Vertical 50x35x0.75 Top Hat Span Table (mm)

	Span type	Top Hat spacing (mm)	Ultimate Wind Pressure W_u (kPa)						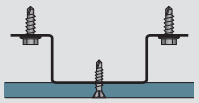		
			1.0	1.5	2.0	2.5	3.0	3.5	4.0	5.0	6.0
Serviceability deflection limit Span / 250	Single span	600	1250	1120	1040	980	920	870	820	750	700
		450	1350	1210	1120	1060	1010	960	920	840	790
		400	1390	1250	1160	1090	1040	1000	960	880	820
		300	1510	1350	1250	1180	1120	1080	1040	980	920
	2 or more spans	600	1250	1120	1040	980	920	830*	730*	580*	480*
		450	1350	1210	1120	1060	1010	960	920	780*	650*
		400	1390	1250	1160	1090	1040	1000	960	870*	730*
		300	1510	1350	1250	1180	1120	1080	1040	980	920
Serviceability deflection limit Span / 360	Single span	600	1250	1120	1040	980	920	870	820	750	700
		450	1350	1210	1120	1060	1010	960	920	840	790
		400	1390	1250	1160	1090	1040	1000	960	880	820
		300	1510	1350	1250	1180	1120	1080	1040	980	920
	2 or more spans	600	1250	1120	1040	980	920	830*	730*	580*	480*
		450	1350	1210	1120	1060	1010	960	920	780*	650*
		400	1390	1250	1160	1090	1040	1000	960	870*	730*
		300	1510	1350	1250	1180	1120	1080	1040	980	920

Table 8 Vertical 50x50x0.75 Top Hat Span Table (mm)

	Span type	Top Hat spacing (mm)	Ultimate Wind Pressure W_u (kPa)						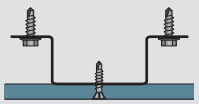		
			1.0	1.5	2.0	2.5	3.0	3.5	4.0	5.0	6.0
Serviceability deflection limit Span / 250	Single span	600	1550	1380	1260	1180	1110	1050	1000	920	860
		450	1670	1500	1380	1290	1220	1160	1110	1030	960
		400	1720	1550	1430	1340	1260	1210	1160	1070	1000
		300	1860	1670	1550	1460	1380	1320	1260	1180	1110
	2 or more spans	600	1550	1380	1260	1170*	970*	830*	730*	580*	480*
		450	1670	1500	1380	1290	1220	1110*	970*	780*	650*
		400	1720	1550	1430	1340	1260	1210	1090*	870*	730*
		300	1860	1670	1550	1460	1380	1320	1260	1170*	970*
Serviceability deflection limit Span / 360	Single span	600	1550	1380	1260	1180	1110	1050	1000	920	860
		450	1670	1500	1380	1290	1220	1160	1110	1030	960
		400	1720	1550	1430	1340	1260	1210	1160	1070	1000
		300	1860	1670	1550	1460	1380	1320	1260	1180	1110
	2 or more spans	600	1550	1380	1260	1170*	970*	830*	730*	580*	480*
		450	1670	1500	1380	1290	1220	1110*	970*	780*	650*
		400	1720	1550	1430	1340	1260	1210	1090*	870*	730*
		300	1860	1670	1550	1460	1380	1320	1260	1170*	970*

*Limited by 2x10g Hex-head screw connection capacity.

1. Check maximum cladding span and fastener spacing requirements from the manufacturer's literature. Maximum cladding weight 22 kg/m^2.
2. Tables include self weight and uniformly distributed lateral pressures. Point loads or live loads are not considered.
3. Tables refer to Siniat Top Hats of grade G300 steel with Zincalume™ AM150 corrosion protection.
4. All Top Hats must be supported 150mm maximum from ends.
5. Calculations based upon either single span or 2-or-more spans, designed in accordance with *AS/NZS 4600:2018 Cold Formed Steel Structures.*
6. Wind pressures determined in accordance with *AS/NZS 1170.2 Wind Actions.*
7. Ultimate Load Case 1: 1.2G + Wu
8. Serviceability Load Case 1: G + Ws, with deflection limited to span/250 or span/360. Serviceability pressure taken as 65% of ultimate wind pressure suitable for Region A and Region B.
9. Connections checked using 2 x 10g hex-head screws into minimum 1.0mm BMT G550 steel or minimum 1.5mm BMT G450 steel (purlins or girts). Contact Siniat if fixing to a different substrate for the possibility of spanning further.
10. Splicing of Top Hats is not permitted.
11. Do not use tables for vertical top hats over horizontal top hat construction.
12. The nominated lateral pressures and deflection limits must be checked for suitability for a specific project.

Horizontal Top Hats over Stud Framing

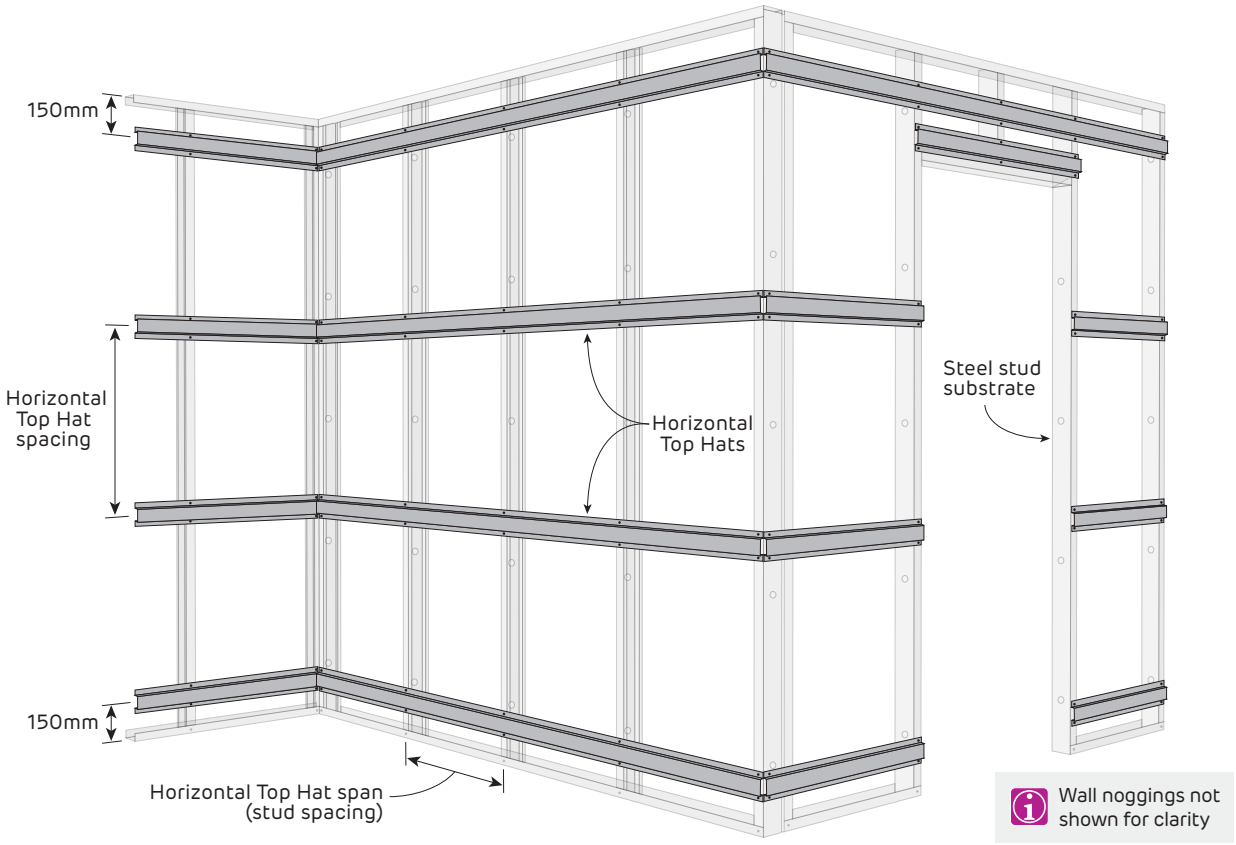

FIGURE 2 Horizontal Steel Top Hat Layout

Table 9 Horizontal 50x15x1.15 Top Hat Spacing Table (mm)

	Span type	Stud spacing (mm)	Ultimate Wind Pressure W_u (kPa)				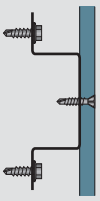	
			2.0	3.0	4.0	5.0	6.0	7.0
Serviceability deflection limit Span / 250	Single span	600	900	620	460	370	310	260
		450	900	900	900	830	690	590
		400	900	900	900	900	900	780
		300	900	900	900	900	900	900
	2 or more spans	600	900	670	500	400	330	280
		450	900	900	680*	540*	450*	390*
		400	900	900	760*	610*	510*	430*
		300	900	900	900	820*	680*	580*
Serviceability deflection limit Span / 360	Single span	600	640	430	320	250	210	180
		450	900	900	760	610	510	430
		400	900	900	900	870	720	620
		300	900	900	900	900	900	900
	2 or more spans	600	900	670	500	400	330	280
		450	900	900	680*	540*	450*	390*
		400	900	900	760*	610*	510*	430*
		300	900	900	900	820*	680*	580*

Table 10 Horizontal 50x25x1.15 or 50x35x1.15 or 50x50x1.15 Top Hat Spacing Table (mm)

	Span type	Stud spacing (mm)	Ultimate Wind Pressure W_u (kPa)				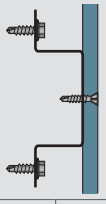	
			2.0	3.0	4.0	5.0	6.0	7.0
Serviceability deflection limit Span / 250	Single span	600	900	900	900	900	850	730
		450	900	900	900	900	900	900
		400	900	900	900	900	900	900
		300	900	900	900	900	900	900
	2 or more spans	600	900	680*	510*	410*	340*	290*
		450	900	900	680*	540*	450*	390*
		400	900	900	760*	610*	510*	430*
		300	900	900	900	820*	680*	580*
Serviceability deflection limit Span / 360	Single span	600	900	900	900	900	820	700
		450	900	900	900	900	900	900
		400	900	900	900	900	900	900
		300	900	900	900	900	900	900
	2 or more spans	600	900	680*	510*	410*	340*	290*
		450	900	900	680*	540*	450*	390*
		400	900	900	760*	610*	510*	430*
		300	900	900	900	820*	680*	580*

*Limited by 2x10g Hex-head screw connection capacity.

1. Top Hat spacing limited to maximum 900mm spacing to apply an evenly distributed load to stud frame substrate.
2. Check maximum cladding span and fastener spacing requirements from the manufacturer's literature. Maximum cladding weight 22 kg/m² or seat cladding on floor.
3. Tables include self weight and uniformly distributed lateral pressures. Point loads or live loads are not considered.
4. Tables refer to Siniat Top Hats of grade G300 steel with Zincalume™ AM150 corrosion protection.
5. All Top Hats must be supported 150mm maximum from ends.
6. Calculations based upon either single span or 2-or-more spans, designed in accordance with *AS/NZS 4600:2018 Cold Formed Steel Structures.*
7. Wind pressures determined in accordance with *AS/NZS 1170.2 Wind Actions.*
8. Ultimate Load Case 1: 1.2G + Wu
9. Serviceability Load Case 1: G + Ws, with deflection limited to span/250 or span/360. Serviceability pressure taken as 65% of ultimate wind pressure.
10. Connections checked using 2 x 10g hex-head screws into minimum 1.15mm thick G300 steel.
11. Splicing of Top Hats is not permitted.
12. Do not use tables for vertical top hats over horizontal top hat construction.
13. The nominated lateral pressures and deflection limits must be checked for suitability for a specific project.

Table 11 Horizontal 50x15x0.75 Top Hat Spacing Table (mm)

	Span type	Stud spacing (mm)	Ultimate Wind Pressure W_u (kPa)				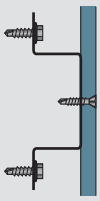	
			2.0	3.0	4.0	5.0	6.0	7.0
Serviceability deflection limit Span / 250	Single span	600	560	370	280	220	180	160
		450	900	860	640	510	430	360
		400	900	900	840	670	560	480
		300	900	900	900	900	900	850
	2 or more spans	600	560	370	280	220	180	160
		450	900	860	640	510	430	360
		400	900	900	760*	610*	510*	430*
		300	900	900	900	820*	680*	580*
Serviceability deflection limit Span / 360	Single span	600	420	280	210	160	140	120
		450	900	660	500	400	330	280
		400	900	900	710	570	470	400
		300	900	900	900	900	900	850
	2 or more spans	600	560	370	280	220	180	160
		450	900	860	640	510	430	360
		400	900	900	760*	610*	510*	430*
		300	900	900	900	820*	680*	580*

Table 12 Horizontal 50x25x0.75 Top Hat Spacing Table (mm)

	Span type	Stud spacing (mm)	Ultimate Wind Pressure W_u (kPa)				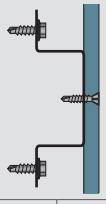	
			2.0	3.0	4.0	5.0	6.0	7.0
Serviceability deflection limit Span / 250	Single span	600	900	900	790	630	530	450
		450	900	900	900	900	900	870
		400	900	900	900	900	900	900
		300	900	900	900	900	900	900
	2 or more spans	600	900	680*	510*	410*	340*	290*
		450	900	900	680*	540*	450*	390*
		400	900	900	760*	610*	510*	430*
		300	900	900	900	820*	680*	580*
Serviceability deflection limit Span / 360	Single span	600	900	900	790	630	530	450
		450	900	900	900	900	900	870
		400	900	900	900	900	900	900
		300	900	900	900	900	900	900
	2 or more spans	600	900	680*	510*	410*	340*	290*
		450	900	900	680*	540*	450*	390*
		400	900	900	760*	610*	510*	430*
		300	900	900	900	820*	680*	580*

*Limited by 2x10g Hex-head screw connection capacity.

1. Top Hat spacing limited to maximum 900mm spacing to apply an evenly distributed load to stud frame substrate.
2. Check maximum cladding span and fastener spacing requirements from the manufacturer's literature. Maximum cladding weight 22 kg/m^2 or seat cladding on floor.
3. Tables include self weight and uniformly distributed lateral pressures. Point loads or live loads are not considered.
4. Tables refer to Siniat Top Hats of grade G300 steel with Zincalume™ AM150 corrosion protection.
5. All Top Hats must be supported 150mm maximum from ends.
6. Calculations based upon either single span or 2-or-more spans, designed in accordance with *AS/NZS 4600:2018 Cold Formed Steel Structures.*
7. Wind pressures determined in accordance with *AS/NZS 1170.2 Wind Actions.*
8. Ultimate Load Case 1: 1.2G + Wu
9. Serviceability Load Case 1: G + Ws, with deflection limited to span/250 or span/360. Serviceability pressure taken as 65% of ultimate wind pressure.
10. Connections checked using 2 x 10g hex-head screws into minimum 1.15mm thick G300 steel.
11. Splicing of Top Hats is not permitted.
12. Do not use tables for vertical top hats over horizontal top hat construction.
13. The nominated lateral pressures and deflection limits must be checked for suitability for a specific project.

Table 13 Horizontal 50x35x0.75 or 50x50x0.75 Top Hat Spacing Table (mm)

	Span type	Stud spacing (mm)	Ultimate Wind Pressure W_u (kPa)				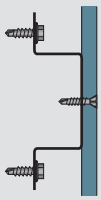	
			2.0	3.0	4.0	5.0	6.0	7.0
Serviceability deflection limit Span / 250	Single span	600	900	900	900	900	850	730
		450	900	900	900	900	900	900
		400	900	900	900	900	900	900
		300	900	900	900	900	900	900
	2 or more spans	600	900	680*	510*	410*	340*	290*
		450	900	900	680*	540*	450*	390*
		400	900	900	760*	610*	510*	430*
		300	900	900	900	820*	680*	580*
Serviceability deflection limit Span / 360	Single span	600	900	900	900	900	850	730
		450	900	900	900	900	900	900
		400	900	900	900	900	900	900
		300	900	900	900	900	900	900
	2 or more spans	600	900	680*	510*	410*	340*	290*
		450	900	900	680*	540*	450*	390*
		400	900	900	760*	610*	510*	430*
		300	900	900	900	820*	680*	580*

*Limited by 2x10g Hex-head screw connection capacity.

1. Top Hat spacing limited to maximum 900mm spacing to apply an evenly distributed load to stud frame substrate.
2. Check maximum cladding span and fastener spacing requirements from the manufacturer's literature. Maximum cladding weight 22 kg/m^2 or seat cladding on floor.
3. Tables include self weight and uniformly distributed lateral pressures. Point loads or live loads are not considered.
4. Tables refer to Siniat Top Hats of grade G300 steel with Zincalume™ AM150 corrosion protection.
5. All Top Hats must be supported 150mm maximum from ends.
6. Calculations based upon either single span or 2-or-more spans, designed in accordance with *AS/NZS 4600:2018 Cold Formed Steel Structures.*
7. Wind pressures determined in accordance with *AS/NZS 1170.2 Wind Actions.*
8. Ultimate Load Case 1: 1.2G + Wu
9. Serviceability Load Case 1: G + Ws, with deflection limited to span/250 or span/360. Serviceability pressure taken as 65% of ultimate wind pressure.
10. Connections checked using 2 x 10g hex-head screws into minimum 1.15mm thick G300 steel.
11. Splicing of Top Hats is not permitted.
12. Do not use tables for vertical top hats over horizontal top hat construction.
13. The nominated lateral pressures and deflection limits must be checked for suitability for a specific project.

Horizontal + Vertical Top Hats over Stud Framing

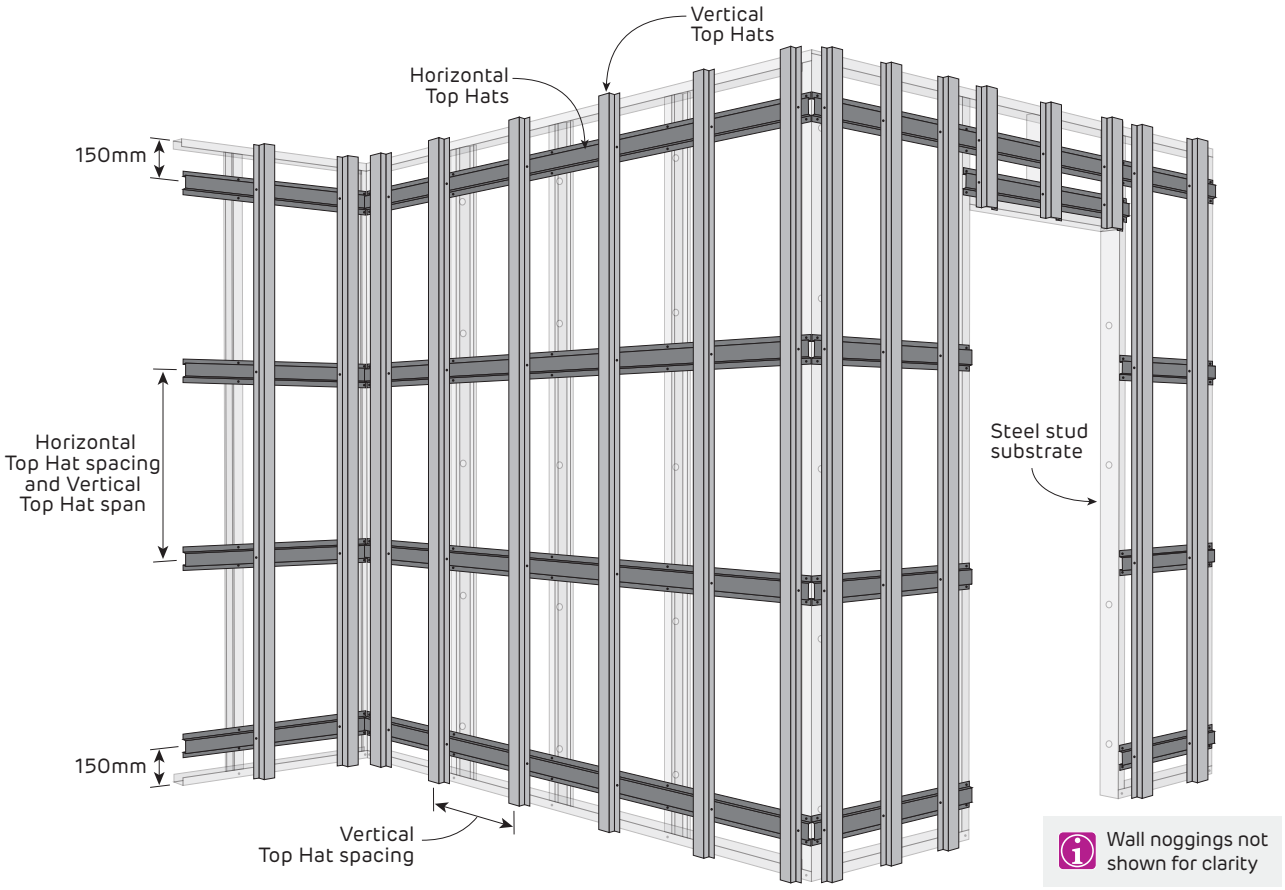

FIGURE 3 Vertical Top Hats over Horizontal Top Hats

Many cladding systems require vertical top hats as the substrate. Siniat Top Hat Cleats may be used to install vertical top hats directly over studs although this may not always be practical. A flexible solution is to install horizontal top hats and then vertical top hats which can be placed wherever they are needed [Refer to Figure 3]. Contact Siniat for a framing design with vertical top hats over horizontal top hats.

With horizontal top hat and vertical top hat framing over wall studs, a thermal break is typically not required.

Steel Profile Information

Material

Manufacturer	Grade	Ultimate	Yield	Coating
Siniat	G300	340 MPa	300 MPa	AM150

1. Steel grade and coating in accordance with AS 1397 *Continuous hot-dip metallic coated steel sheet and strip*

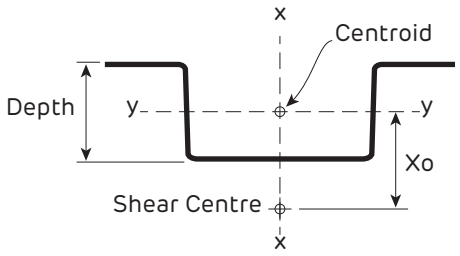

Top Hats

Section Properties

Profile	Dimensions (mm)		Shear Centre from Centroid (mm)	Area (mm²)	Moment of Inertia (mm⁴)		Section Modulus (mm³)		Torsion Constant J (mm⁴)	Warping Constant Iw (mm⁶)
	Depth	BMT	Xo		Ixx	Iyy	Zxx	Zyy		
50x15x0.75	15	0.75	-11.2	75.4	41,268	2,781	1,028	334	14.1	517,040
50x25x0.75	25	0.75	-19.7	99.5	67,737	10,632	1,461	844	18.7	2,482,400
50x35x0.75	35	0.75	-29.6	111.5	69,125	22,319	1,594	1,193	20.9	5,708,900
50x50x0.75	50	0.75	-42.0	140.0	97,829	54,286	2,022	2,178	26.3	17,086,000
50x15x1.15	15	1.15	-11.2	115.5	63,281	4,267	1,568	513	50.9	791,440
50x25x1.15	25	1.15	-19.7	152.6	103,830	16,300	2,229	1,294	67.3	3,799,990
50x35x1.15	35	1.15	-29.0	171.0	108,950	33,724	2,444	1,846	75.4	8,407,000
50x50x1.15	50	1.15	-42.0	214.7	149,990	83,217	3,088	3,339	94.7	26,182,000
120x35x1.15	35	1.15	-24.5	265.3	782,880	48,559	8,889	2,114	116.9	90,681,000

Fire Rated and Non-Fire Rated
Top Hat Cleats over External Wall Framing

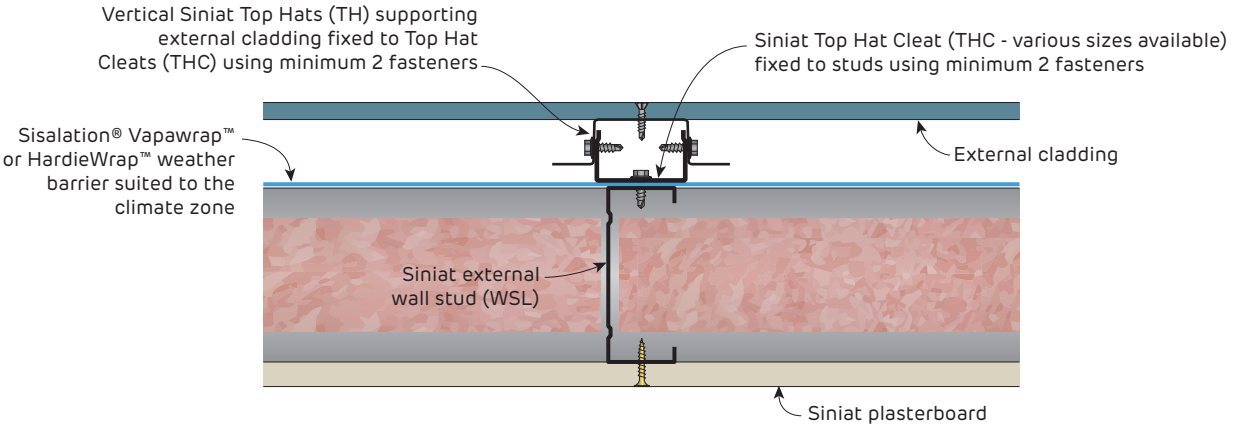

FIGURE 4 External Steel Stud Wall
Vertical Top Hats over Top Hat Cleats
Plan

Additional studs may need to be installed to accommodate top hat cleats

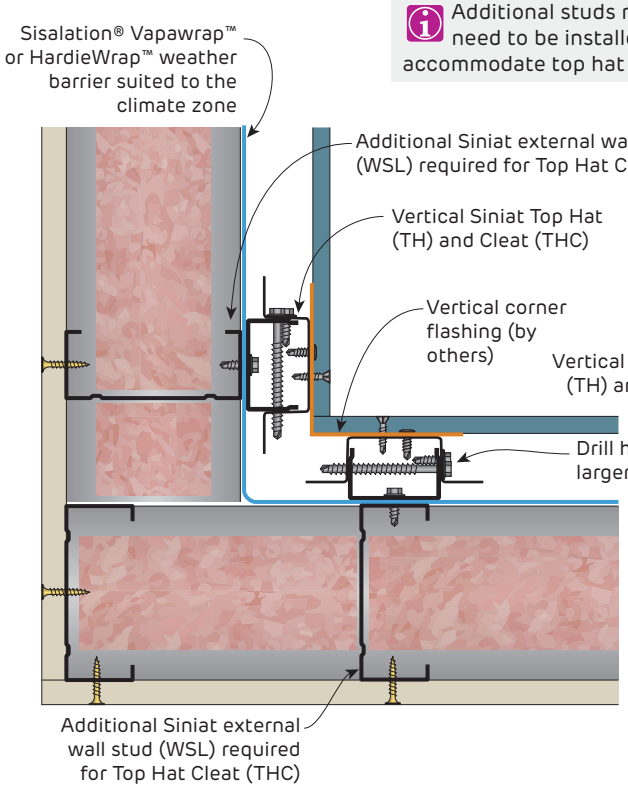

FIGURE 5 External Steel Stud Wall Internal Corner
Vertical Top Hats over Top Hat Cleats
Plan

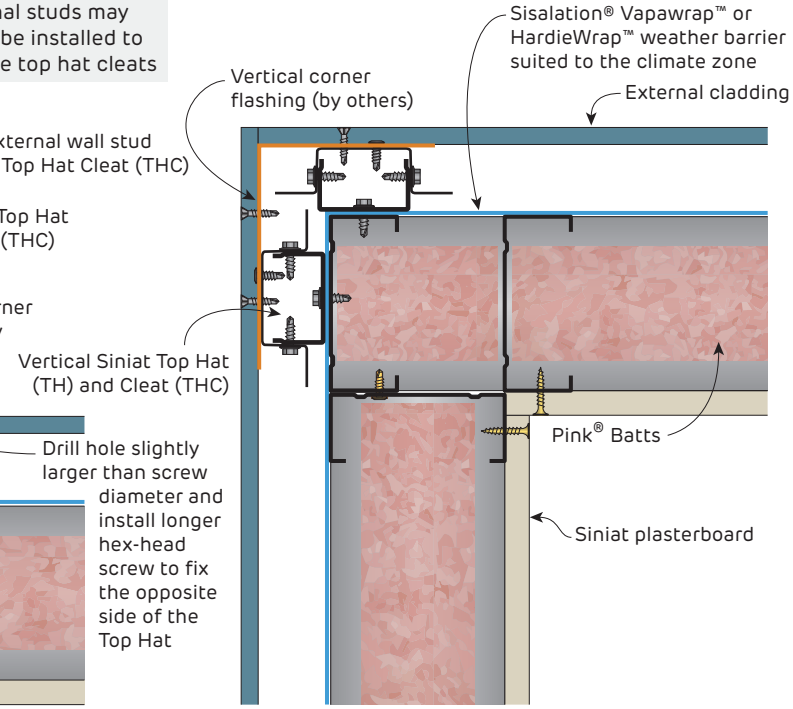

FIGURE 6 External Steel Stud Wall External Corner
Vertical Top Hats over Top Hat Cleats
Plan



SYSTEMS	**452**
SYSTEM DIRECTORY	452
INSTALLATION	**472**
GENERAL REQUIREMENTS	472
FRAMING	473
WORKED EXAMPLE	494
EXTERNAL CEILINGS	496
STEEL PROFILE INFORMATION	497
PLASTERBOARD LAYOUT	498
PLASTERBOARD FIXING	498
CONSTRUCTION DETAILS	**508**
FINISHING DETAILS	**521**
PENETRATIONS	**522**

5.1 Ceilings

This section contains a wide range of internal ceiling solutions that can meet aesthetic, sound insulation and fire protection requirements. They are either directly fixed to joists or are installed to a concealed suspended steel frame.

Most fire rated ceilings as per National Construction Code (NCC) requirements are rated from below only. For ceilings fire rated from above, or fire rated from above and below refer to Sections 5.3 and 5.4.

This section includes systems, installation instructions and construction details for general and fire rated ceilings.

Exterior ceiling applications have additional requirements [Refer to External Ceilings in this section].

System Directory

Ceiling Under Floor Framing

Plasterboard fixed to joist	A-clips and Furring Channel	Resilient Mount and Furring Channel	Top Cross Rail and Furring Channel	Top Cross Rail, Resilient Mount and Furring Channel
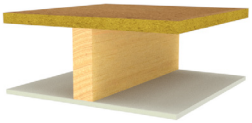	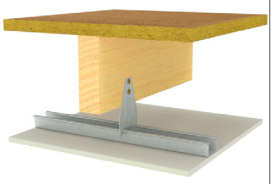	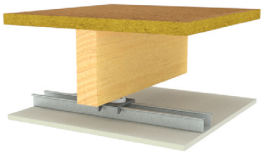	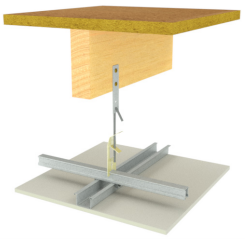	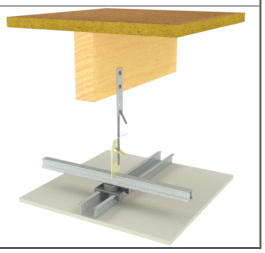

Fire Rated Ceilings Under Floor Framing

Plasterboard fixed to joist	A-clips and Furring Channel	Resilient Mount and Furring Channel	Top Cross Rail and Furring Channel	Top Cross Rail, Resilient Mount and Furring Channel
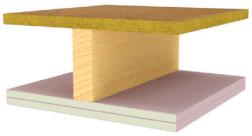	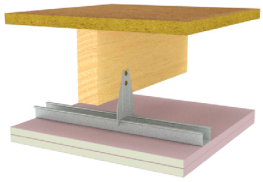	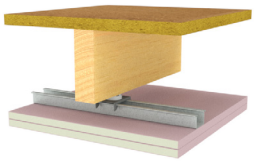	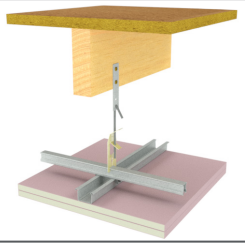	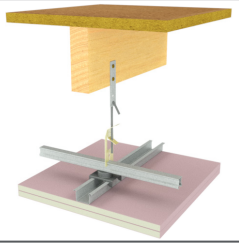

Non-Fire Rated and Fire Rated Ceiling Under a Concrete Slab

Clips and Furring Channel	Resilient Mount and Furring Channel	Top Cross Rail and Furring Channel
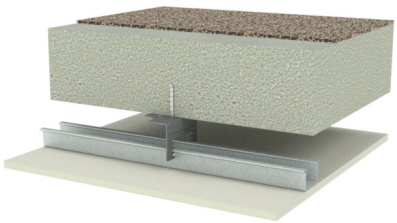		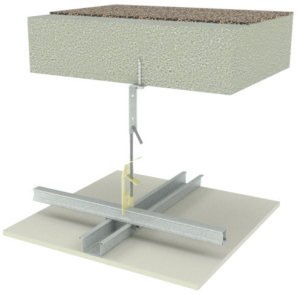

Universal Fire Rated Ceilings

Joist or Furring Channel
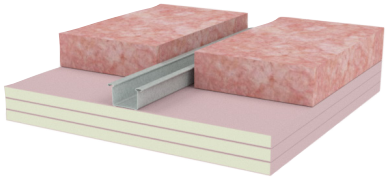

Ceiling Under Steel Roof Sheeting with Foil Backed Insulation

Plasterboard fixed to joist	A-clips and Furring Channel	Top Cross Rail and Furring Channel
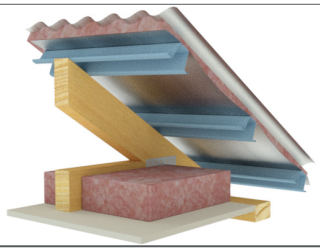	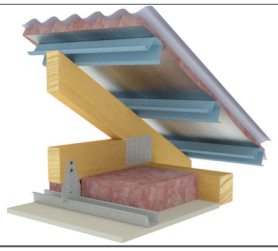	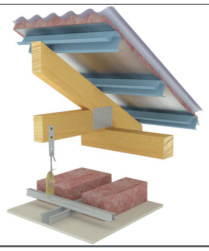

Ceiling Under Steel Roof Sheeting with Reflective Foil Only

Plasterboard fixed to joist	A-clips and Furring Channel	Top Cross Rail and Furring Channel
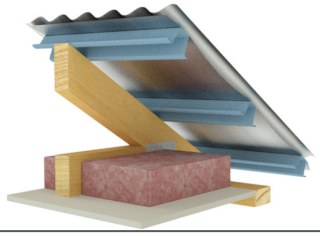	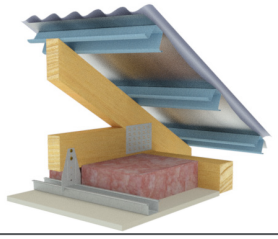	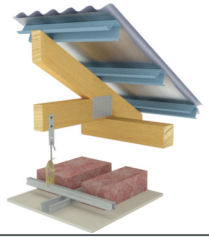

Fire Rated Ceiling Under Steel Roof Sheeting with Foil Backed Insulation

Plasterboard fixed to joist	A-clips and Furring Channel	Top Cross Rail and Furring Channel
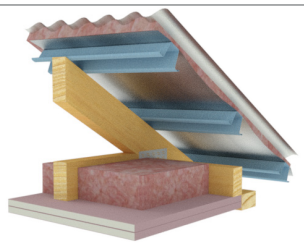	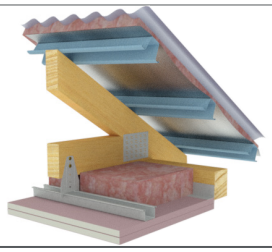	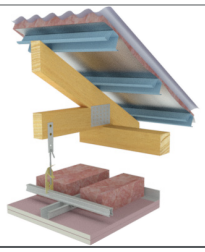

Ceiling Under Tiled Roof

Plasterboard fixed to joist	A-clips and Furring Channel
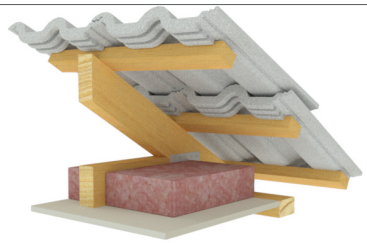	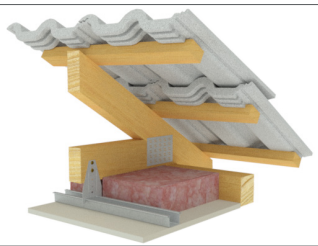

Fire Rated Ceiling Under Tiled Roof

Plasterboard fixed to joist	A-clips and Furring Channel
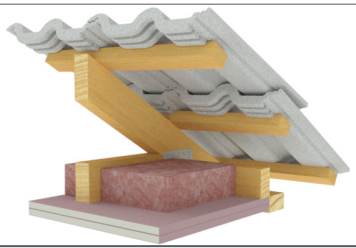	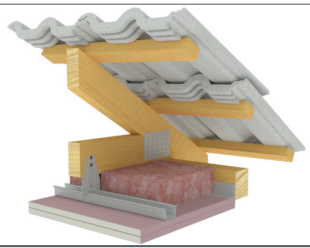

CUJ10-CUJ19

- Minimum 19mm particleboard flooring or timber flooring with either carpet, tiles or left bare
- Minimum 140mm cavity with timber or steel ceiling joists
- Plasterboard ceiling lining as specified in the table

[Carpet requires an underlay and tiles require a fibre cement underlay]
[Impact Sound Insulation values determined using insulation]

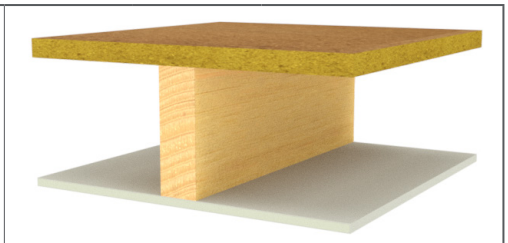

System	Ceiling Lining	Airborne Sound Insulation Rw (Rw + Ctr)		Impact Sound Insulation Ln,w		
		No insulation	Pink® Partition 50mm 11 kg/m³ R1.2	Carpet and Underlay	Tiled or Left bare	Report
CUJ10	1 layer of 10mm **masta**shield or **span**shield	44 (37)	46 (40)	39	78	Day Design 3094-26
CUJ11	2 layers of 10mm **masta**shield or **span**shield	47 (41)	48 (43)	38	76	
CUJ14	1 layer of 13mm **masta**shield	44 (38)	46 (41)	38	77	
CUJ16	1 layer of 10mm **sound**shield or **opal**	44 (38) [1]	46 (41) [2]	38 [3]	77 [4]	[1]TL458Ta [2]TL458Tb [3]TL458id [4]TL458ic
CUJ17	2 layers of 10mm **sound**shield or **opal**	48 (42)	49 (44)	37	75	
CUJ18	1 layer of 13mm **sound**shield	45 (40)	46 (41)	38	76	
CUJ19	2 layers of 13mm **sound**shield	49 (44)	49 (45)	37	73	

CUJ20-CUJ29

- Minimum 19mm particleboard flooring or timber flooring with either carpet, tiles or left bare
- Minimum 140mm cavity with timber or steel ceiling joists
- A-clips and Furring Channel
- Plasterboard ceiling lining as specified in the table

[Carpet requires an underlay and tiles require a fibre cement underlay]
[Impact Sound Insulation values determined using insulation]

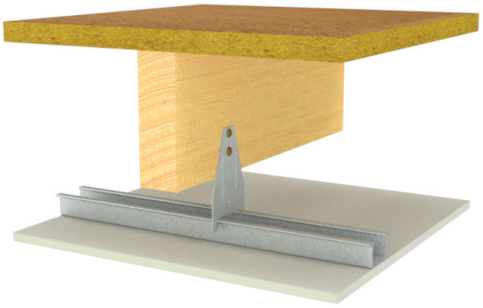

System	Ceiling Lining	Airborne Sound Insulation Rw (Rw + Ctr)		Impact Sound Insulation Ln,w		
		No insulation	Pink® Partition 50mm 11 kg/m³ R1.2	Carpet and Underlay	Tiled or Left bare	Report
CUJ20	1 layer of 10mm **masta**shield or **span**shield	47 (41)	53 (46)	39	71	Day Design 3094-26
CUJ21	2 layers of 10mm **masta**shield or **span**shield	50 (44)	55 (49)	38	68	
CUJ24	1 layer of 13mm **masta**shield	48 (42)	53 (46)	38	69	
CUJ26	1 layer of 10mm **sound**shield or **opal**	48 (42)	53 (46)	38 [1]	69	[1]TL458Tie
CUJ27	2 layers of 10mm **sound**shield or **opal**	51 (46)	56 (49)	37	67	
CUJ28	1 layer of 13mm **sound**shield	49 (43)	53 (47)	38	68	
CUJ29	2 layers of 13mm **sound**shield	52 (47)	56 (50)	37	65	

CUJ30-CUJ39

- Minimum 19mm particleboard flooring or timber flooring with either carpet, tiles or left bare
- Minimum 140mm cavity with timber or steel ceiling joists
- Resilient Mounts and Furring Channel
- Plasterboard ceiling lining as specified in the table

[Carpet requires an underlay and tiles require a fibre cement underlay]
[Impact Sound Insulation values determined using insulation]

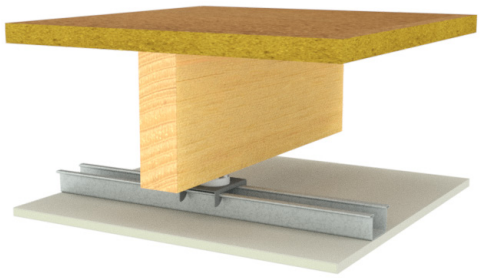

System	Ceiling Lining	Airborne Sound Insulation Rw (Rw + Ctr)		Impact Sound Insulation Ln,w		
		No insulation	Pink® Partition 50mm 11 kg/m³ R1.2	Carpet and Underlay	Tiled or Left bare	Report
CUJ30	1 layer of 10mm **masta**shield or **span**shield	45 (40)	50 (42)	28	68	Day Design 3094-26
CUJ31	2 layers of 10mm **masta**shield or **span**shield	49 (44)	54 (48)	27	66	
CUJ34	1 layer of 13mm **masta**shield	46 (41)	51 (44)	27	67	
CUJ36	1 layer of 10mm **sound**shield or **opal**	46 (41)	51 (44)	27	67	[1]TL458Tf [2]TL458Tih
CUJ37	2 layers of 10mm **sound**shield or **opal**	51 (45) [1]	56 (50)	26	64 [2]	
CUJ38	1 layer of 13mm **sound**shield	48 (43)	53 (47)	27	66	
CUJ39	2 layers of 13mm **sound**shield	53 (48)	57 (52)	26	63	

Insulation shown is the minimum required to meet the acoustic rating. Refer to Chapter 2 for more information.

CUJ40-CUJ49

- Minimum 19mm particleboard flooring or timber flooring with either carpet, tiles or left bare
- Minimum 140mm cavity with timber or steel ceiling joists
- Suspended Top Cross Rail and Furring Channel
- Plasterboard ceiling lining as specified in the table

[Carpet requires an underlay and tiles require a fibre cement underlay]
[Impact Sound Insulation values determined using insulation]

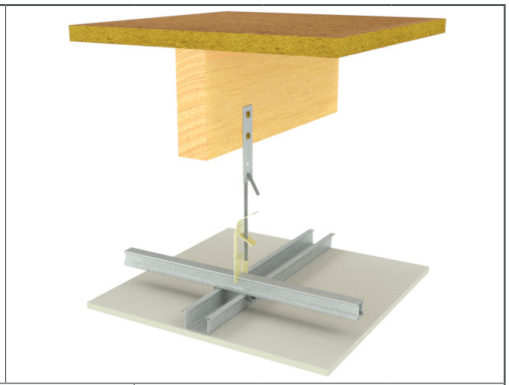

System	Ceiling Lining	Airborne Sound Insulation Rw (Rw + Ctr)		Impact Sound Insulation Ln,w		
		No insulation	Pink® Partition 50mm 11 kg/m³ R1.2	Carpet and Underlay	Tiled or Left bare	Report
CUJ40	1 layer of 10mm **masta**shield or **span**shield	45 (37)	52 (45)	28	67	Day Design 3094-26 [1]TL458Tik
CUJ41	2 layers of 10mm **masta**shield or **span**shield	50 (41)	55 (51)	27	65	
CUJ44	1 layer of 13mm **masta**shield	47 (38)	52 (47)	27	66	
CUJ46	1 layer of 10mm **sound**shield or **opal**	47 (38)	52 (47)	27	66	
CUJ47	2 layers of 10mm **sound**shield or **opal**	51 (43)	56 (51)	26	63 [1]	
CUJ48	1 layer of 13mm **sound**shield	48 (40)	53 (49)	27	65	
CUJ49	2 layers of 13mm **sound**shield	53 (45)	57 (53)	26	62	

CUJ50-CUJ59

- Minimum 19mm particleboard flooring or timber flooring with either carpet, tiles or left bare
- Minimum 140mm cavity with timber or steel ceiling joists
- Suspended Top Cross Rail with Resilient Mount and Furring Channel
- Plasterboard ceiling lining as specified in the table

[Carpet requires an underlay and tiles require a fibre cement underlay]
[Impact Sound Insulation values determined using insulation]

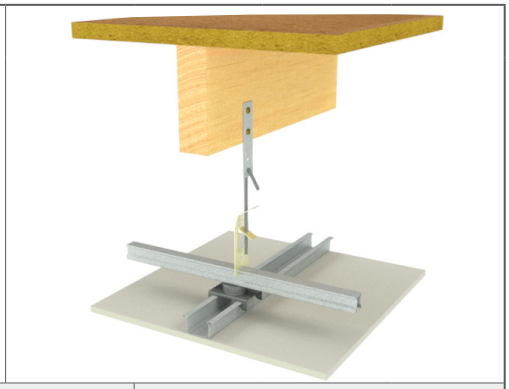

System	Ceiling Lining	Airborne Sound Insulation Rw (Rw + Ctr)		Impact Sound Insulation Ln,w		
		No insulation	Pink® Partition 50mm 11 kg/m³ R1.2	Carpet and Underlay	Tiled or Left bare	Report
CUJ50	1 layer of 10mm **masta**shield or **span**shield	46 (38)	54 (48)	28	67	Day Design 3094-26 [1]TL458Til
CUJ51	2 layers of 10mm **masta**shield or **span**shield	50 (42)	58 (53)	27	65	
CUJ54	1 layer of 13mm **masta**shield	47 (40)	55 (49)	27	66	
CUJ56	1 layer of 10mm **sound**shield or **opal**	47 (40)	55 (49)	27	66 [1]	
CUJ57	2 layers of 10mm **sound**shield or **opal**	52 (44)	59 (54)	26	63	
CUJ58	1 layer of 13mm **sound**shield	50 (42)	56 (52)	27	65	
CUJ59	2 layers of 13mm **sound**shield	55 (47)	60 (57)	26	62	

Insulation shown is the minimum required to meet the acoustic rating. Refer to Chapter 2 for more information.

CUJ210-CUJ218

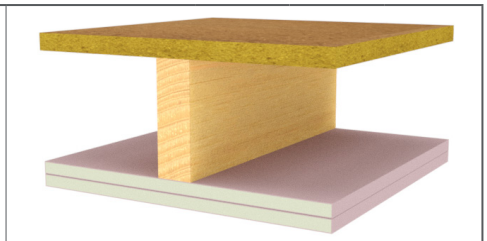

- Minimum 19mm particleboard flooring or timber flooring with either carpet, tiles or left bare
- Minimum 140mm cavity with timber or steel ceiling joists
- Plasterboard Ceiling Lining ad specified in table

[Carpet requires an underlay and tiles require a fibre cement underlay]
[Impact Sound Insulation values determined using insulation]
fireshield can be substituted with **multi**shield or **tru**rock

FRL Rated from below	**RISF**	**System**	**Ceiling Lining**	**Max Framing Centres (mm)**	**Airborne Sound Insulation Rw (Rw + Ctr)**		**Impact Sound Insulation Ln,w**		
Report FC14332					No insulation	Pink® Partition 50mm 11 kg/m³ R1.2	Carpet and Underlay	Tiled or Left bare	
30/30/30	-	CUJ210	1 layer of 13mm **fire**shield	600	45 (39)	46 (41)	**38**	77	Report Day Design 3094-26 3094-50
60/60/60	-	CUJ211	2 layers of 13mm **fire**shield	450	48 (43)	49 (45)	**37**	75	
60/60/60	-	CUJ212	1 layer of 16mm **fire**shield	450	45 (40)	46 (41)	**38**	76	
60/60/60	60	CUJ213	1 layer of 13mm **fire**shield applied first plus 1 layer of 16mm **fire**shield	600	49 (43)	49 (45)	**37**	75	
60/60/60	60	CUJ214	2 layers of 16mm **fire**shield	600	50 (44)	51 (46)	**37**	73	
90/90/90	60	CUJ215	2 layers of 16mm **fire**shield	450	50 (44)	51 (46)	**37**	73	
90/90/90	60	CUJ216	3 layers of 13mm **fire**shield	450	51 (46)	51 (47)	**36**	72	
120/120/120	60	CUJ217	1 layer of 13mm **fire**shield applied first plus 2 layers of 16mm **fire**shield	450	52 (46)	52 (48)	**36**	72	
120/120/120	60	CUJ218	3 layers of 16mm **fire**shield	450	52 (47)	52 (48)	**35**	72	

CUJ500

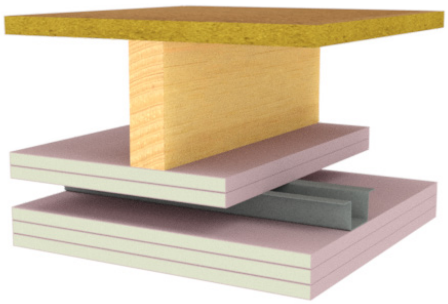

- Minimum 19mm particleboard flooring or timber flooring with either carpet, tiles or left bare
- Timber or steel ceiling joists
- 2 layers of 16mm **fire**shield
- Perpendicular top-hats or furring channels at maximum 450mm centres
- [Below] 3 layers of 16mm **fire**shield

fireshield can be substituted with **multi**shield

Fire Resistance Level

180/180/180
rated from below only

RISF 180 minutes

Report FC14332

Sound Insulation for framing at 450mm centres
Rw (Rw + Ctr)

No insulation	Pink® Partition 50mm 11kg/m³ R1.2	Report INSUL v9
53 (45)	54 (**50**)	

Insulation shown is the minimum required to meet the acoustic rating. Refer to Chapter 2 for more information.

CUJ220-CUJ228

- Minimum 19mm particleboard flooring or timber flooring with either carpet, tiles or left bare
- Minimum 140mm cavity with timber or steel ceiling joists
- A-clips and Furring Channel
- Plasterboard ceiling lining as specified in the table

[Carpet requires an underlay and tiles require a fibre cement underlay]
[Impact Sound Insulation values determined using insulation]
fireshield can be substituted with **multi**shield or **tru**rock

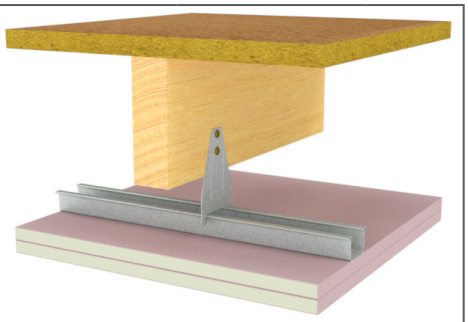

FRL Rated from below	RISF	System	Ceiling Lining	Max Framing Centres (mm)	Airborne Sound Insulation Rw (Rw + Ctr)		Impact Sound Insulation Ln,w		
Report FC14332					No insulation	Pink® Partition 50mm 11 kg/m³ R1.2	Carpet and Underlay	Tiled or Left bare	
30/30/30	-	CUJ220	1 layer of 13mm **fire**shield	600	47 (42)	51 (45)	**38**	69	Report Day Design 3094-26 3094-50
60/60/60	-	CUJ221	2 layers of 13mm **fire**shield	450	52 (46)	57 (**50**)	**37**	66	
60/60/60	-	CUJ222	1 layer of 16mm **fire**shield	450	49 (43)	54 (48)	**38**	68	
60/60/60	60	CUJ223	1 layer of 13mm **fire**shield applied first plus 1 layer of 16mm **fire**shield	600	53 (47)	56 (**51**)	**37**	66	
60/60/60	60	CUJ224	2 layers of 16mm **fire**shield	600	53 (48)	56 (**51**)	**37**	66	
90/90/90	60	CUJ225	2 layers of 16mm **fire**shield	450	53 (48)	56 (**51**)	**37**	66	
90/90/90	60	CUJ226	3 layers of 13mm **fire**shield	450	55 (**50**)	58 (**53**)	**36**	65	
120/120/120	60	CUJ227	1 layer of 13mm **fire**shield applied first plus 2 layers of 16mm **fire**shield	450	56 (**50**)	59 (**54**)	**36**	64	
120/120/120	60	CUJ228	3 layers of 16mm **fire**shield	450	56 (**51**)	59 (**54**)	**36**	64	

CUJ230-CUJ238

- Minimum 19mm particleboard flooring or timber flooring with either carpet, tiles or left bare
- Minimum 140mm cavity with timber or steel ceiling joists
- Resilient Mounts and Furring Channel
- Plasterboard ceiling lining as specified in the table

[Carpet requires an underlay and tiles require a fibre cement underlay]
[Impact Sound Insulation values determined using insulation]
fireshield can be substituted with **multi**shield or **tru**rock

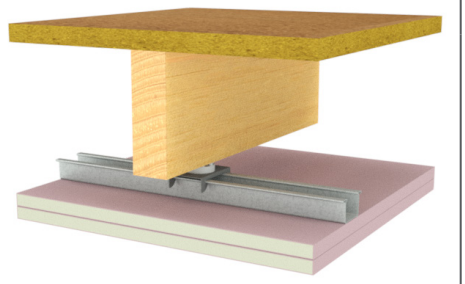

FRL Rated from below	RISF	System	Ceiling Lining	Max Framing Centres (mm)	Airborne Sound Insulation Rw (Rw + Ctr)		Impact Sound Insulation Ln,w		
Report FC14332					No insulation	Pink® Partition 50mm 11 kg/m³ R1.2	Carpet and Underlay	Tiled or Left bare	
30/30/30	-	CUJ230	1 layer of 13mm **fire**shield	600	47 (42)	51 (45)	**27**	65	Report Day Design 3094-26 3094-50 [1]TL458Tj [2]TL458Tij
60/60/60	-	CUJ231	2 layers of 13mm **fire**shield	450	51 (46)	56 (**50**)	**26**	63	
60/60/60	-	CUJ232	1 layer of 16mm **fire**shield	450	48 (43)	53 (47)	**27**	65	
60/60/60	60	CUJ233	1 layer of 13mm **fire**shield applied first plus 1 layer of 16mm **fire**shield	600	53 (48)	56 (**51**)	**26**	**62** [2]	
60/60/60	60	CUJ234	2 layers of 16mm **fire**shield	600	54 (48)	56 (**51**)	**26**	**62**	
90/90/90	60	CUJ235	2 layers of 16mm **fire**shield	450	54 (48)	56 (**51**)	**26**	**62**	
90/90/90	60	CUJ236	3 layers of 13mm **fire**shield	450	55 (**50**)	59 (**53**)	**26**	**61**	
120/120/120	60	CUJ237	1 layer of 13mm **fire**shield applied first plus 2 layers of 16mm **fire**shield	450	56 (**51**)	59 (**54**)	**26**	**60**	
120/120/120	60	CUJ238	3 layers of 16mm **fire**shield	450	57 (**51**)	59 (**54**)	**26**	**60**	

Insulation shown is the minimum required to meet the acoustic rating. Refer to Chapter 2 for more information.

CUJ240-CUJ248

- Minimum 19mm particleboard flooring or timber flooring with either carpet, tiles or left bare
- Minimum 140mm cavity with timber or steel ceiling joists
- Suspended Top Cross Rail and Furring Channel
- Plasterboard ceiling lining as specified in the table

[Carpet requires an underlay and tiles require a fibre cement underlay]
[Impact Sound Insulation values determined using insulation]
fireshield can be substituted with **multi**shield or **tru**rock

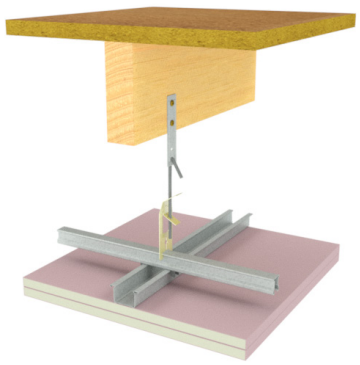

FRL Rated from below	RISF	System	Ceiling Lining	Max Framing Centres (mm)	Airborne Sound Insulation Rw (Rw + Ctr)		Impact Sound Insulation Ln,w		
Report FC14332					No insulation	Pink® Partition 50mm 11 kg/m³ R1.2	Carpet and Underlay	Tiled or Left bare	
30/30/30	-	CUJ240	1 layer of 13mm **fire**shield	600	48 (40)	53 (48)	**27**	65	Report Day Design 3094-26 3094-50
60/60/60	-	CUJ241	2 layers of 13mm **fire**shield	450	52 (44)	57 (**52**)	**26**	63	
60/60/60	-	CUJ242	1 layer of 16mm **fire**shield	450	48 (40)	53 (49)	**27**	65	
60/60/60	60	CUJ243	1 layer of 13mm **fire**shield applied first plus 1 layer of 16mm **fire**shield	600	53 (45)	57 (**53**)	**26**	**62**	
60/60/60	60	CUJ244	2 layers of 16mm **fire**shield	600	54 (46)	58 (**54**)	**26**	**62**	
90/90/90	60	CUJ245	2 layers of 16mm **fire**shield	450	54 (46)	58 (**54**)	**26**	**62**	
90/90/90	60	CUJ246	3 layers of 13mm **fire**shield	450	55 (47)	59 (**55**)	**26**	**61**	
120/120/120	60	CUJ247	1 layer of 13mm **fire**shield applied first plus 2 layers of 16mm **fire**shield	450	56 (48)	59 (**56**)	**26**	**60**	
120/120/120	60	CUJ248	3 layers of 16mm **fire**shield	450	56 (48)	60 (**56**)	**26**	**60**	

CUJ250-CUJ258

- Minimum 19mm particleboard flooring or timber flooring with either carpet, tiles or left bare
- Minimum 140mm cavity with timber or steel ceiling joists
- Suspended Top Cross Rail with Resilient Mount and Furring Channel
- Plasterboard ceiling lining as specified in the table

[Carpet requires an underlay and tiles require a fibre cement underlay]
[Impact Sound Insulation values determined using insulation]
fireshield can be substituted with **multi**shield or **tru**rock

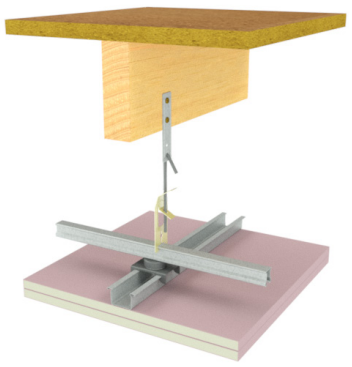

FRL Rated from below	RISF	System	Ceiling Lining	Max Framing Centres (mm)	Airborne Sound Insulation Rw (Rw + Ctr)		Impact Sound Insulation Ln,w		
Report FC14332					No insulation	Pink® Partition 50mm 11 kg/m³ R1.2	Carpet and Underlay	Tiled or Left bare	
30/30/30	-	CUJ250	1 layer of 13mm **fire**shield	600	49 (41)	55 (**51**)	**27**	64	Report Day Design 3094-26
60/60/60	-	CUJ251	2 layers of 13mm **fire**shield	450	53 (45)	60 (**55**)	**26**	63	
60/60/60	-	CUJ252	1 layer of 16mm **fire**shield	450	50 (42)	56 (**52**)	**27**	64	
60/60/60	60	CUJ253	1 layer of 13mm **fire**shield applied first plus 1 layer of 16mm **fire**shield	600	54 (46)	60 (**56**)	**26**	**62**	
60/60/60	60	CUJ254	2 layers of 16mm **fire**shield	600	55 (47)	61 (**57**)	**26**	**62**	
90/90/90	60	CUJ255	2 layers of 16mm **fire**shield	450	55 (47)	61 (**57**)	**26**	**62**	
90/90/90	60	CUJ256	3 layers of 13mm **fire**shield	450	57 (49)	62 (**59**)	**26**	**61**	
120/120/120	60	CUJ257	1 layer of 13mm **fire**shield applied first plus 2 layers of 16mm **fire**shield	450	58 (**50**)	63 (**59**)	**26**	**60**	
120/120/120	60	CUJ258	3 layers of 16mm **fire**shield	450	58 (**50**)	63 (**60**)	**26**	**60**	

Insulation shown is the minimum required to meet the acoustic rating. Refer to Chapter 2 for more information.

CUC20-CUC228

- 4.5mm thick Regupol 4515 or 4mm thick A1 Rubber 720 AcoustaMat, if specified in table
- Concrete slab as specified in table, with either carpet, tiles, timber flooring or left bare
- Clips and Furring Channel (minimum 50mm cavity)
- Plasterboard ceiling lining as specified in the table

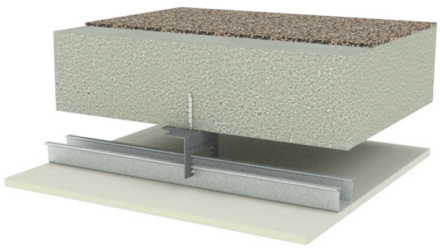

mastashield can be substituted with **water**shield
fireshield can be substituted with **multi**shield or **tru**rock

FRL Rated from below	RISF	System	Ceiling Lining	Maximum Framing Centres (mm)	Insulation	Airborne Sound Insulation Rw (Rw + Ctr)	Impact Sound Insulation Ln,w		
							Day Design 5008-25, 5008-43		
Report FC14332					Pink® Partition 50mm 11 kg/m³ R1.2		Tiled, timber flooring or left bare	Tiled or timber flooring with acoustic underlay	Carpet and Underlay
150mm thick concrete slab									
-	-	CUC20	1 layer of 10mm **masta**shield	450	No	55 (45)	70	**59**	**43**
					Yes	59 (49)	67	**54**	**38**
-	-	CUC22	1 layer of 10mm **span**shield	600	No	55 (45)	70	**59**	**43**
					Yes	59 (49)	67	**54**	**38**
-	-	CUC24	1 layer of 13mm **masta**shield	600	No	56 (46)	70	**59**	**43**
					Yes	60 (**50**)	67	**54**	**38**
-	-	CUC26	1 layer of 10mm **sound**shield or **opal**	600	No	56 (46)	70	**59**	**43**
					Yes	60 (**50**)	64 [1]	**54**	**38**
30/30/30	-	CUC220	1 layer of 13mm **fire**shield	600	No	57 (47)	70	**58**	**42**
					Yes	62 (**52**)	67	**53**	**37**
60/60/60	-	CUC222	1 layer of 16mm **fire**shield	450	No	58 (48)	70	**58**	**42**
					Yes	63 (**53**)	67	**53**	**37**
60/60/60	60	CUC223	1 layer of 13mm **fire**shield applied first plus 1 layer of 16mm **fire**shield	600	No	60 (**52**)	68	**57**	**41**
					Yes	65 (**54**)	65	**52**	**36**
90/90/90	60	CUC225	2 layers of 16mm **fire**shield	450	No	61 (**53**)	68	**57**	**41**
					Yes	65 (**55**)	65	**52**	**36**
120/120/120	60	CUC228	3 layers of 16mm **fire**shield	450	No	62 (**55**)	68	**56**	**40**
					Yes	67 (**56**)	65	**51**	**35**
200mm thick concrete slab									
-	-	CUC120	1 layer of 10mm **masta**shield	450	No	58 (48)	68	**58**	**42**
					Yes	62 (**51**)	65	**53**	**37**
-	-	CUC122	1 layer of 10mm **span**shield	600	No	58 (48)	68	**58**	**42**
					Yes	62 (**51**)	65	**53**	**37**
-	-	CUC124	1 layer of 13mm **masta**shield	600	No	59 (**50**)	68	**58**	**42**
					Yes	63 (**52**)	64	**53**	**37**
-	-	CUC126	1 layer of 10mm **sound**shield or **opal**	600	No	59 (49)	68	**58**	**42**
					Yes	63 (**52**)	64	**53**	**37**
30/30/30	-	CUC320	1 layer of 13mm **fire**shield	600	No	61 (**50**)	67	**57**	**41**
					Yes	65 (**53**)	64	**52**	**36**
60/60/60	-	CUC322	1 layer of 16mm **fire**shield	450	No	63 (**51**)	67	**57**	**41**
					Yes	66 (**54**)	64	**52**	**36**
60/60/60	60	CUC323	1 layer of 13mm **fire**shield applied first plus 1 layer of 16mm **fire**shield	600	No	64 (**54**)	65	**56**	**40**
					Yes	67 (**58**)	63	**51**	**35**
90/90/90	60	CUC325	2 layers of 16mm **fire**shield	450	No	64 (**55**)	65	**56**	**40**
					Yes	67 (**58**)	63	**51**	**35**
120/120/120	60	CUC328	3 layers of 16mm **fire**shield	450	No	65 (**56**)	64	**55**	**39**
					Yes	68 (**59**)	63	**50**	**34**

[1] TL458io

Insulation shown is the minimum required to meet the acoustic rating. Refer to Chapter 2 for more information.

CUC500

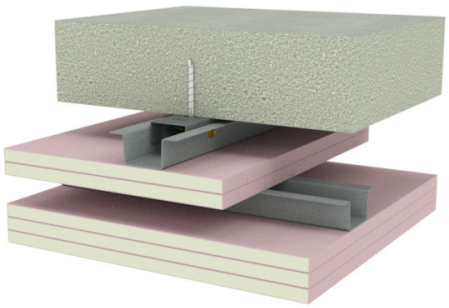

- Minimum 150mm thick concrete slab
- 2 layers of 16mm **fire**shield
- Perpendicular top-hats or furring channels at maximum 450mm centres
- [Below] 3 layers of 16mm **fire**shield

Fire Resistance Level

180/180/180
rated from below only

RISF 180 minutes

Report FC14332

Sound Insulation for framing at 450mm centres
Rw (Rw + Ctr)

No insulation	Pink® Partition 50mm 11kg/m³ R1.2	Report INSUL v9
64 (**58**)	65 (**61**)	

Insulation shown is the minimum required to meet the acoustic rating. Refer to Chapter 2 for more information.

CUC30-CUC238

- 4.5mm thick Regupol 4515 or 4mm thick A1 Rubber 720 AcoustaMat, if specified in table
- Concrete slab as specified in table, with either carpet, tiles, timber flooring or left bare
- Resilient Mounts and Furring Channel (minimum 50mm cavity) or separate stud ceiling frame
- Plasterboard ceiling lining as specified in the table

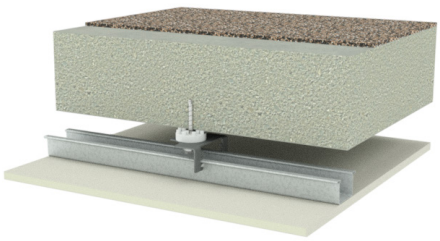

mastashield can be substituted with **water**shield
fireshield can be substituted with **multi**shield or **tru**rock

FRL Rated from below	RISF	System	Ceiling Lining	Maximum Framing Centres (mm)	Insulation	Airborne Sound Insulation Rw (Rw + Ctr)	Impact Sound Insulation Ln,w		
							Day Design 5008-25, 5008-43		
Report FC14332					Pink® Partition 50mm 11 kg/m³ R1.2		Tiled, timber flooring or left bare	Tiled or timber flooring with acoustic underlay	Carpet and Underlay
150mm thick concrete slab									
-	-	CUC30	1 layer of 10mm **masta**shield	450	No	56 (46)	65	**54**	**38**
					Yes	61 (**51**)	**62**	**49**	**33**
-	-	CUC32	1 layer of 10mm **span**shield	600	No	56 (46)	65	**54**	**38**
					Yes	61 (**51**)	**62**	**49**	**33**
-	-	CUC34	1 layer of 13mm **masta**shield	600	No	57 (47)	65	**54**	**38**
					Yes	62 (**52**)	**62**	**49**	**33**
-	-	CUC36	1 layer of 10mm **sound**shield or **opal**	600	No	57 (47)	65	**54**	**38**
					Yes	62 (**52**)	**61** [1]	**49**	**33**
30/30/30	-	CUC230	1 layer of 13mm **fire**shield	600	No	58 (48)	65	**53**	**37**
					Yes	64 (**54**)	**62**	**48**	**32**
60/60/60	-	CUC232	1 layer of 16mm **fire**shield	450	No	59 (49)	65	**53**	**37**
					Yes	65 (**55**)	**62**	**48**	**32**
60/60/60	60	CUC233	1 layer of 13mm **fire**shield applied first plus 1 layer of 16mm **fire**shield	600	No	61 (**52**)	63	**52**	**36**
					Yes	66 (**56**)	**60**	**47**	**31**
90/90/90	60	CUC235	2 layers of 16mm **fire**shield	450	No	62 (**53**)	63	**52**	**36**
					Yes	66 (**57**)	**60**	**47**	**31**
120/120/120	60	CUC238	3 layers of 16mm **fire**shield	450	No	65 (**55**)	63	**51**	**35**
					Yes	68 (**58**)	**60**	**46**	**30**
200mm thick concrete slab									
-	-	CUC130	1 layer of 10mm **masta**shield	450	No	62 (**51**)	63	**53**	**37**
					Yes	65 (**54**)	**60**	**48**	**32**
-	-	CUC132	1 layer of 10mm **span**shield	600	No	62 (**51**)	63	**53**	**37**
					Yes	65 (**54**)	**60**	**48**	**32**
-	-	CUC134	1 layer of 13mm **masta**shield	600	No	63 (**52**)	63	**53**	**37**
					Yes	66 (**55**)	**59**	**48**	**32**
-	-	CUC136	1 layer of 10mm **sound**shield	600	No	63 (**52**)	63	**53**	**37**
					Yes	66 (**55**)	**59**	**48**	**32**
30/30/30	-	CUC330	1 layer of 13mm **fire**shield	600	No	65 (**54**)	**62**	**52**	**36**
					Yes	68 (**57**)	**59**	**47**	**31**
60/60/60	-	CUC332	1 layer of 16mm **fire**shield	450	No	66 (**55**)	**62**	**52**	**36**
					Yes	69 (**58**)	**59**	**47**	**31**
60/60/60	60	CUC333	1 layer of 13mm **fire**shield applied first plus 1 layer of 16mm **fire**shield	600	No	67 (**56**)	**60**	**51**	**35**
					Yes	70 (**59**)	**58**	**46**	**30**
90/90/90	60	CUC335	2 layers of 16mm **fire**shield	450	No	67 (**57**)	**60**	**51**	**35**
					Yes	70 (**60**)	**58**	**46**	**30**
120/120/120	60	CUC338	3 layers of 16mm **fire**shield	450	No	68 (**58**)	**59**	**50**	**34**
					Yes	71 (**61**)	**58**	**45**	**29**

[1] TL458io

Insulation shown is the minimum required to meet the acoustic rating. Refer to Chapter 2 for more information.

CUC40-CUC248

- 4.5mm thick Regupol 4515 or 4mm thick A1 Rubber 720 AcoustaMat, if specified in table
- Concrete slab as specified in table, with either carpet, tiles, timber flooring or left bare
- Suspended Top Cross Rail and Furring Channel (minimum 300mm cavity), or steel stud ceiling without dropper studs with minimum 10mm gap between studs and concrete.
- Plasterboard ceiling lining as specified in the table

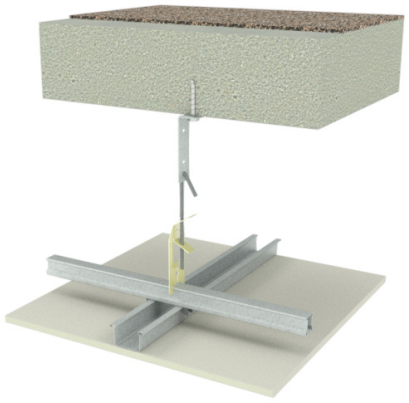

For a cavity size of 150mm the Rw and Rw+Ctr ratings will reduce by 2 points
mastashield can be substituted with **water**shield
fireshield can be substituted with **multi**shield or **tru**rock

FRL Rated from below	RISF	System	Ceiling Lining	Maximum Framing Centres (mm)	Insulation	Airborne Sound Insulation Rw (Rw + Ctr)	Impact Sound Insulation Ln,w		
							Day Design 5008-25, 5008-43		
Report FC14332					Pink® Partition 50mm 11 kg/m³ R1.2		Tiled, timber flooring or left bare	Tiled or timber flooring with acoustic underlay	Carpet and Underlay
150mm thick concrete slab									
-	-	CUC40	1 layer of 10mm **masta**shield	450	No	61 (**50**)	64	**53**	**37**
					Yes	64 (**53**)	**61**	**48**	**32**
-	-	CUC42	1 layer of 10mm **span**shield	600	No	61 (**50**)	64	**53**	**37**
					Yes	64 (**53**)	**61**	**48**	**32**
-	-	CUC44	1 layer of 13mm **masta**shield	600	No	62 (**51**)	64	**53**	**37**
					Yes	65 (**54**)	**61**	**48**	**32**
-	-	CUC46	1 layer of 10mm **sound**shield or **opal**	600	No	62 (**51**)	64	**53**	**37**
					Yes	65 (**54**)	**61**	**48**	**32**
30/30/30	-	CUC240	1 layer of 13mm **fire**shield	600	No	64 (**53**)	64	**52**	**36**
					Yes	67 (**56**)	**61**	**47**	**31**
60/60/60	-	CUC242	1 layer of 16mm **fire**shield	450	No	65 (**54**)	64	**52**	**36**
					Yes	68 (**57**)	**61**	**47**	**31**
60/60/60	60	CUC243	1 layer of 13mm **fire**shield applied first plus 1 layer of 16mm **fire**shield	600	No	66 (**55**)	**62**	**51**	**35**
					Yes	69 (**58**)	**59**	**46**	**30**
90/90/90	60	CUC245	2 layers of 16mm **fire**shield	450	No	66 (**56**)	**62**	**51**	**35**
					Yes	69 (**59**)	**59**	**46**	**30**
120/120/120	60	CUC248	3 layers of 16mm **fire**shield	450	No	67 (**57**)	**62**	**50**	**34**
					Yes	70 (**60**)	**59**	**45**	**29**
200mm thick concrete slab									
-	-	CUC140	1 layer of 10mm **masta**shield	450	No	64 (**53**)	**62**	**52**	**36**
					Yes	67 (**56**)	**59**	**47**	**31**
-	-	CUC142	1 layer of 10mm **span**shield	600	No	64 (**53**)	**62**	**52**	**36**
					Yes	67 (**56**)	**59**	**47**	**31**
-	-	CUC144	1 layer of 13mm **masta**shield	600	No	65 (**54**)	**62**	**52**	**36**
					Yes	68 (**57**)	**58**	**47**	**31**
-	-	CUC146	1 layer of 10mm **sound**shield or **opal**	600	No	65 (**54**)	**62**	**52**	**36**
					Yes	68 (**57**)	**58**	**47**	**31**
30/30/30	-	CUC340	1 layer of 13mm **fire**shield	600	No	67 (**56**)	**61**	**51**	**35**
					Yes	70 (**59**)	**58**	**46**	**30**
60/60/60	-	CUC342	1 layer of 16mm **fire**shield	450	No	68 (**57**)	**61**	**51**	**35**
					Yes	71 (**60**)	**58**	**46**	**30**
60/60/60	60	CUC343	1 layer of 13mm **fire**shield applied first plus 1 layer of 16mm **fire**shield	600	No	69 (**58**)	**59**	**50**	**34**
					Yes	72 (**61**)	**57**	**45**	**29**
90/90/90	60	CUC345	2 layers of 16mm **fire**shield	450	No	69 (**59**)	**59**	**50**	**34**
					Yes	72 (**62**)	**57**	**45**	**29**
120/120/120	60	CUC348	3 layers of 16mm **fire**shield	450	No	70 (**60**)	**58**	**49**	**33**
					Yes	73 (**63**)	**57**	**44**	**28**

UCS400

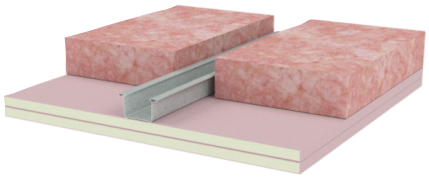

- Timber joists, steel ceiling joists or any furring channel ceiling at maximum 450mm centres
- [Below] 2 layers of 13mm fireshield

fireshield can be substituted with multishield

Fire Resistance Level

30/30/30
rated from below only

Report FC14332

Sound Insulation for framing at 450mm centres
Rw (Rw + Ctr)

No insulation	Pink® Partition 50mm 11kg/m³ R1.2	Report
34 (30)[1]	39 (35)	Day Design 3094-33 [1]ATF1530 INSUL v9

UCS401

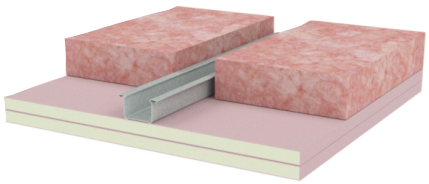

- Timber joists, steel ceiling joists or any furring channel ceiling at maximum **600mm** centres
- [Below] 2 layers of 16mm fireshield

fireshield can be substituted with multishield

Fire Resistance Level

30/30/30
rated from below only

Report FC14332

Sound Insulation for framing at 600mm centres
Rw (Rw + Ctr)

No insulation	Pink® Partition 50mm 11kg/m³ R1.2	Report
35 (32)	40 (37)	Day Design 3094-23 Insul v9

UCS402

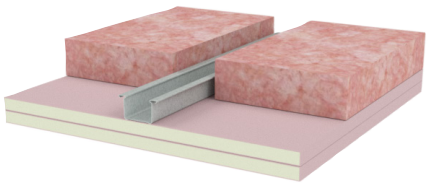

- Timber joists, steel ceiling joists or any furring channel ceiling at maximum **450mm** centres
- [Below] 2 layers of 16mm fireshield

fireshield can be substituted with multishield

Fire Resistance Level

60/60/60
rated from below only

RISF 60 minutes

Report FC14332

Sound Insulation for framing at 450mm centres
Rw (Rw + Ctr)

No insulation	Pink® Partition 50mm 11kg/m³ R1.2	Report
35 (32)	40 (37)	Day Design 3094-23 Insul v9

UCS403

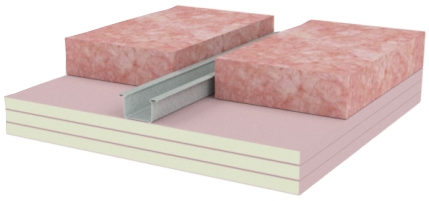

- Timber joists, steel ceiling joists or any furring channel ceiling at maximum 450mm centres
- [Below] 3 layers of 16mm fireshield

fireshield can be substituted with multishield

Fire Resistance Level

90/90/90
rated from below only

RISF 90 minutes

Report FC14332

Sound Insulation for framing at 450mm centres
Rw (Rw + Ctr)

No insulation	Pink® Partition 50mm 11kg/m³ R1.2	Report
38 (36)	44 (40)	Day Design 3094-23 Insul v9

UCS404

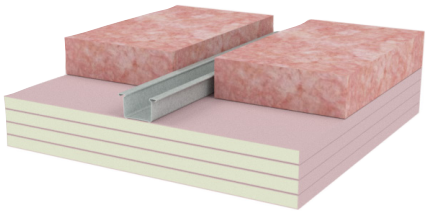

- Timber joists, steel ceiling joists or any furring channel ceiling at maximum 450mm centres
- [Below] 4 layers of 16mm fireshield

fireshield can be substituted with **multi**shield

Fire Resistance Level

120/120/120
rated from below only

RISF 120 minutes

Report FC14332

Sound Insulation for framing at 450mm centres
Rw (Rw + Ctr)

No insulation	Pink® Partition 50mm 11kg/m³ R1.2	Report Insul v9
41 (39)	46 (43)	

CUR10-CUR19

- Sheet metal roofing
- Permastop® Building Blanket R1.3 with Sisalation® reflective facing foil
- Minimum 140mm cavity with timber or steel, rafters, purlins or trusses
- Insulation as specified in the table
- Plasterboard ceiling lining as specified in the table

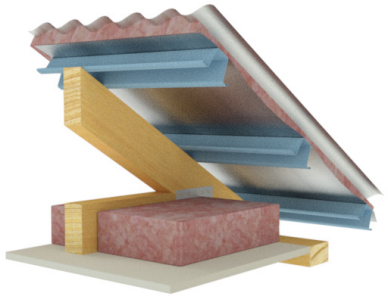

System	Ceiling Lining	Airborne Sound Insulation Rw (Rw + Ctr)		
		Pink® Batts Ceiling R2.5	Polyester Batts Ceiling R2.5	
CUR10	1 layer of 10mm **masta**shield or **span**shield	41 (37)	41 (35)	Report Day Design 5008-24 [1]TL458Rf
CUR11	2 layers of 10mm **masta**shield or **span**shield	43 (40)	43 (39)	
CUR14	1 layer of 13mm **masta**shield	43 (39)	43 (37)	
CUR16	1 layer of 10mm **sound**shield or **opal**	44 (40)	44 (38)	
CUR17	2 layers of 10mm **sound**shield or **opal**	45 (42)[1]	45 (41)	
CUR18	1 layer of 13mm **sound**shield	44 (41)	44 (39)	
CUR19	2 layers of 13mm **sound**shield	47 (45)	48 (44)	

CUR20-CUR29

- Sheet metal roofing
- Permastop® Building Blanket R1.3 with Sisalation® reflective facing foil
- Minimum 140mm cavity with timber or steel, rafters, purlins or trusses
- A-clips and Furring Channel
- Insulation as specified in the table
- Plasterboard ceiling lining as specified in the table

[Lateral restraint of truss bottom chord must be considered, ie: bottom chord ties and steelbrace]

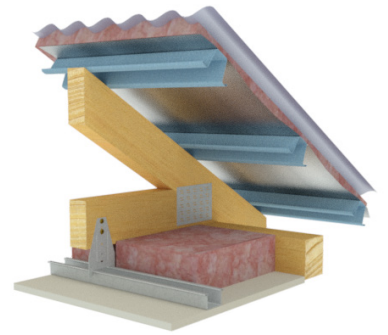

System	Ceiling Lining	Airborne Sound Insulation Rw (Rw + Ctr)		
		Pink® Batts Ceiling R2.5	Polyester Batts Ceiling R2.5	
CUR20	1 layer of 10mm **masta**shield or **span**shield	51 (42)	50 (40)	Report Day Design 5008-24 [1]TL458Rm
CUR21	2 layers of 10mm **masta**shield or **span**shield	53 (45)	52 (43)	
CUR24	1 layer of 13mm **masta**shield	53 (44)	52 (42)	
CUR26	1 layer of 10mm **sound**shield or **opal**	54 (45)	53 (43)	
CUR27	2 layers of 10mm **sound**shield or **opal**	55 (48)[1]	55 (46)	
CUR28	1 layer of 13mm **sound**shield	55 (46)	54 (44)	
CUR29	2 layers of 13mm **sound**shield	58 (51)	58 (49)	

CUR40-CUR49

- Sheet metal roofing
- Permastop® Building Blanket R1.3 with Sisalation® reflective facing foil
- Timber or steel, rafters, purlins or trusses
- Suspended Top Cross Rail and Furring Channel
- Insulation as specified in the table
- Plasterboard ceiling lining as specified in the table

[Lateral restraint of truss bottom chord must be considered, ie: bottom chord ties and steelbrace]

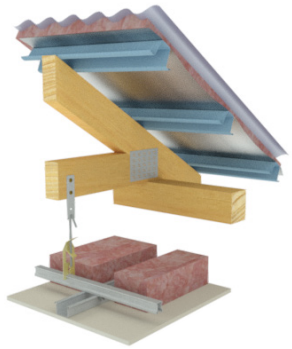

System	Ceiling Lining	Airborne Sound Insulation Rw (Rw + Ctr)		
		Pink® Batts Ceiling R2.5	Polyester Batts Ceiling R2.5	
CUR40	1 layer of 10mm **masta**shield or **span**shield	51 (42)	50 (40)	Report Day Design 5008-24 [1]TL458Ri
CUR41	2 layers of 10mm **masta**shield or **span**shield	53 (45)	52 (44)	
CUR44	1 layer of 13mm **masta**shield	53 (44)	52 (42)	
CUR46	1 layer of 10mm **sound**shield or **opal**	54 (45)	53 (43)	
CUR47	2 layers of 10mm **sound**shield or **opal**	55 (48)[1]	55 (46)	
CUR48	1 layer of 13mm **sound**shield	55 (46)	54 (44)	
CUR49	2 layers of 13mm **sound**shield	58 (51)	58 (49)	

Insulation shown is the minimum required to meet the acoustic rating. Refer to Chapter 2 for more information.

CUR60-CUR69

- Sheet metal roofing
- Sisalation® Metal Roof Sarking
- Minimum 140mm cavity with timber or steel, rafters, purlins or trusses
- Insulation as specified in the table
- Plasterboard ceiling lining as specified in the table

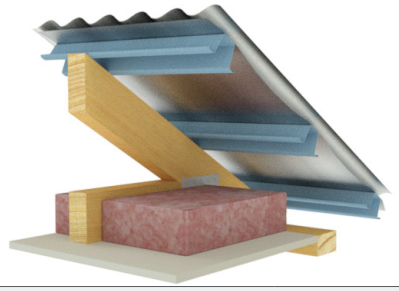

System	Ceiling Lining	Airborne Sound Insulation Rw (Rw + Ctr)		
		Pink® Batts Ceiling R2.5	Polyester Batts Ceiling R2.5	
CUR60	1 layer of 10mm **masta**shield or **span**shield	39 (36)	39 (34)	Report Day Design 5008-27
CUR61	2 layers of 10mm **masta**shield or **span**shield	41 (39)	41 (38)	
CUR64	1 layer of 13mm **masta**shield	42 (38)	42 (36)	
CUR66	1 layer of 10mm **sound**shield or **opal**	42 (49)	42 (37)	
CUR67	2 layers of 10mm **sound**shield or **opal**	43 (41)	43 (40)	
CUR68	1 layer of 13mm **sound**shield	42 (40)	42 (38)	
CUR69	2 layers of 13mm **sound**shield	45 (44)	46 (43)	

CUR70-CUR79

- Sheet metal roofing
- Sisalation® Metal Roof Sarking
- Minimum 140mm cavity with timber or steel, rafters, purlins or trusses
- A-clips and Furring Channel
- Insulation as specified in the table
- Plasterboard ceiling lining as specified in the table

[Lateral restraint of truss bottom chord must be considered, ie: bottom chord ties and steelbrace]

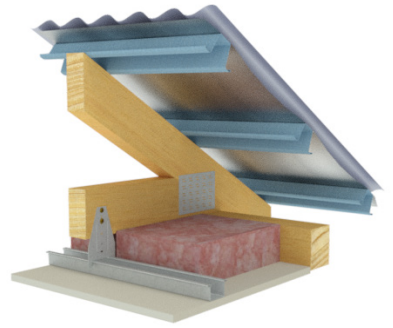

System	Ceiling Lining	Airborne Sound Insulation Rw (Rw + Ctr)		
		Pink® Batts Ceiling R2.5	Polyester Batts Ceiling R2.5	
CUR70	1 layer of 10mm **masta**shield or **span**shield	49 (41)	48 (39)	Report Day Design 5008-27
CUR71	2 layers of 10mm **masta**shield or **span**shield	51 (44)	50 (42)	
CUR74	1 layer of 13mm **masta**shield	51 (43)	50 (41)	
CUR76	1 layer of 10mm **sound**shield or **opal**	52 (44)	51 (42)	
CUR77	2 layers of 10mm **sound**shield or **opal**	53 (47)	53 (45)	
CUR78	1 layer of 13mm **sound**shield	53 (45)	52 (43)	
CUR79	2 layers of 13mm **sound**shield	56 (50)	56 (48)	

CUR90-CUR99

- Sheet metal roofing
- Sisalation® Metal Roof Sarking
- Timber or steel, rafters, purlins or trusses
- Suspended Top Cross Rail and Furring Channel
- Insulation as specified in the table
- Plasterboard ceiling lining as specified in the table

[Lateral restraint of truss bottom chord must be considered, ie: bottom chord ties and steelbrace]

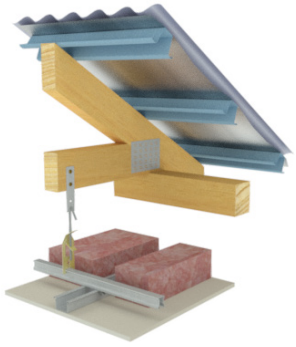

System	Ceiling Lining	Airborne Sound Insulation Rw (Rw + Ctr)		
		Pink® Batts Ceiling R2.5	Polyester Batts Ceiling R2.5	
CUR90	1 layer of 10mm **masta**shield or **span**shield	49 (41)	48 (39)	Report Day Design 5008-27
CUR91	2 layers of 10mm **masta**shield or **span**shield	51 (44)	50 (43)	
CUR94	1 layer of 13mm **masta**shield	51 (43)	50 (41)	
CUR96	1 layer of 10mm **sound**shield or **opal**	52 (44)	51 (42)	
CUR97	2 layers of 10mm **sound**shield or **opal**	53 (47)	53 (45)	
CUR98	1 layer of 13mm **sound**shield	53 (45)	52 (43)	
CUR99	2 layers of 13mm **sound**shield	56 (50)	56 (48)	

Insulation shown is the minimum required to meet the acoustic rating. Refer to Chapter 2 for more information.

CUR210-CUR218

- Sheet metal roofing
- Permastop® Building Blanket R1.3 with Sisalation® reflective facing foil
- Minimum 140mm deep timber or steel, rafters or trusses
- Insulation as specified in the table
- Plasterboard ceiling lining as specified in the table

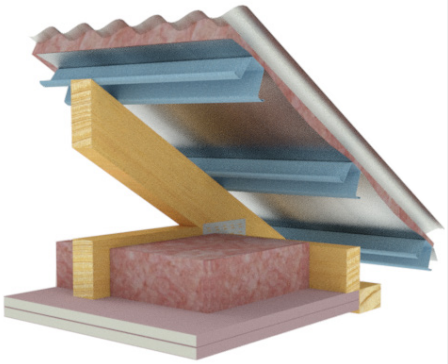

fireshield can be substituted with **multi**shield or **tru**rock

FRL Rated from below	RISF	System	Ceiling Lining	Max Framing Centres (mm)	Airborne Sound Insulation Rw (Rw + Ctr)		
Report FC14332					Pink® Batts Ceiling R2.5	Polyester Batts Ceiling R2.5	
30/30/30	-	CUR210	1 layer of 13mm **fire**shield	600	43 (39)	43 (38)	Report Day Design 5008-24 3094-50
60/60/60	-	CUR211	2 layers of 13mm **fire**shield	450	45 (44)	44 (43)	
60/60/60	-	CUR212	1 layer of 16mm **fire**shield	450	44 (41)	43 (39)	
60/60/60	60	CUR213	1 layer of 13mm **fire**shield applied first plus 1 layer of 16mm **fire**shield	600	46 (45)	47 (44)	
60/60/60	60	CUR214	2 layers of 16mm **fire**shield	600	48 (46)	48 (45)	
90/90/90	60	CUR215	2 layers of 16mm **fire**shield	450	48 (46)	48 (45)	
90/90/90	60	CUR216	3 layers of 13mm **fire**shield	450	49 (48)	50 (46)	
120/120/120	60	CUR217	1 layer of 13mm **fire**shield applied first plus 2 layers of 16mm **fire**shield	450	50 (49)	51 (47)	
120/120/120	60	CUR218	3 layers of 16mm **fire**shield	450	52 (50)	52 (49)	

CUR500

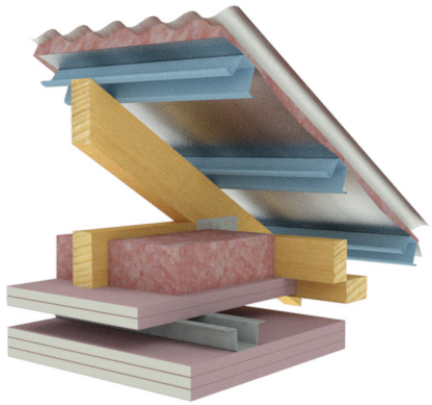

- Sheet metal roofing
- Permastop® Building Blanket R1.3 with Sisalation® reflective facing foil
- Minimum 140mm cavity with timber or steel, rafters, purlins or trusses
- 2 layers of 16mm **fire**shield
- Perpendicular top-hats or furring channels at maximum 450mm centres
- [Below] 3 layers of 16mm **fire**shield

Fire Resistance Level

180/180/180
rated from below only

RISF 180 minutes

Report FC14332

Sound Insulation for framing at 450mm centres
Rw (Rw + Ctr)

Pink® Batts Ceiling R2.5	Polyester Batts Ceiling R2.5	
64 (**52**)	64 (**52**)	Report INSUL v9

Insulation shown is the minimum required to meet the acoustic rating. Refer to Chapter 2 for more information.

CUR220-CUR228

- Sheet metal roofing
- Permastop® Building Blanket R1.3 with Sisalation® reflective facing foil
- Minimum 140mm cavity with timber or steel, rafters, purlins or trusses
- A-clips and Furring Channel
- Insulation as specified in the table
- Plasterboard ceiling lining as specified in the table

[Lateral restraint of truss bottom chord must be considered, ie: bottom chord ties and steelbrace]
fireshield can be substituted with **multi**shield or **tru**rock

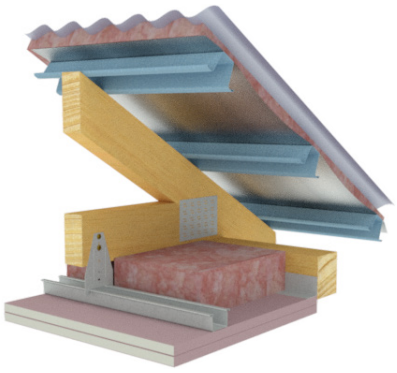

FRL Rated from below	RISF	System	Ceiling Lining	Max Framing Centres (mm)	Airborne Sound Insulation Rw (Rw + Ctr)		
Report FC14332					Pink® Batts Ceiling R2.5	Polyester Batts Ceiling R2.5	
30/30/30	-	CUR220	1 layer of 13mm **fire**shield	600	51 (42)	50 (41)	
60/60/60	-	CUR221	2 layers of 13mm **fire**shield	450	55 (48)	55 (46)	
60/60/60	-	CUR222	1 layer of 16mm **fire**shield	450	52 (43)	51 (42)	Report Day Design 5008-24 3094-50 [1]TL458Rn
60/60/60	60	CUR223	1 layer of 13mm **fire**shield applied first plus 1 layer of 16mm **fire**shield	600	56 (49)	55 (47)	
60/60/60	60	CUR224	2 layers of 16mm **fire**shield	600	57 (**50**)[1]	56 (48)	
90/90/90	60	CUR225	2 layers of 16mm **fire**shield	450	57 (**50**)	56 (48)	
90/90/90	60	CUR226	3 layers of 13mm **fire**shield	450	58 (**52**)	58 (**50**)	
120/120/120	60	CUR227	1 layer of 13mm **fire**shield applied first plus 2 layers of 16mm **fire**shield	450	59 (**53**)	59 (**51**)	
120/120/120	60	CUR228	3 layers of 16mm **fire**shield	450	61 (**55**)	61 (**53**)	

CUR240-CUR248

- Sheet metal roofing
- Permastop® Building Blanket R1.3 with Sisalation® reflective facing foil
- Timber or steel, rafters, purlins or trusses
- Insulation as specified in the table
- Suspended Top Cross Rail and Furring Channel
- Plasterboard ceiling lining as specified in the table

[Lateral restraint of truss bottom chord must be considered, ie: bottom chord ties and steelbrace]
fireshield can be substituted with **multi**shield or **tru**rock

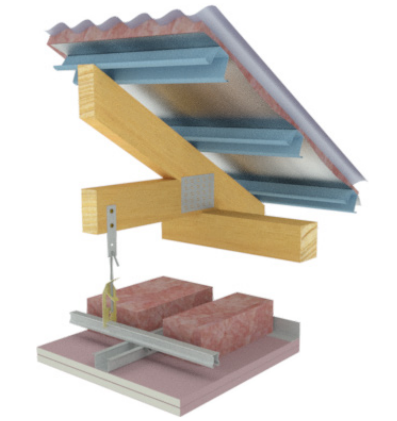

FRL Rated from below	RISF	System	Ceiling Lining	Max Framing Centres (mm)	Airborne Sound Insulation Rw (Rw + Ctr)		
Report FC14332					Pink® Batts Ceiling R2.5	Polyester Batts Ceiling R2.5	
30/30/30	-	CUR240	1 layer of 13mm **fire**shield	600	50 (43)	49 (41)	
60/60/60	-	CUR241	2 layers of 13mm **fire**shield	450	54 (47)	53 (46)	
60/60/60	-	CUR242	1 layer of 16mm **fire**shield	450	51 (43)	50 (42)	Report Day Design 5008-24 3094-50
60/60/60	60	CUR243	1 layer of 13mm **fire**shield applied first plus 1 layer of 16mm **fire**shield	600	55 (49)	54 (47)	
60/60/60	60	CUR244	2 layers of 16mm **fire**shield	600	56 (**50**)	55 (48)	
90/90/90	60	CUR245	2 layers of 16mm **fire**shield	450	56 (**50**)	55 (48)	
90/90/90	60	CUR246	3 layers of 13mm **fire**shield	450	57 (**52**)	57 (**50**)	
120/120/120	60	CUR247	1 layer of 13mm **fire**shield applied first plus 2 layers of 16mm **fire**shield	450	59 (**53**)	58 (**51**)	
120/120/120	60	CUR248	3 layers of 16mm **fire**shield	450	60 (**55**)	60 (**53**)	

Insulation shown is the minimum required to meet the acoustic rating. Refer to Chapter 2 for more information.

CUR110-CUR119

- Concrete or terracotta tiles
- Optional heavy duty reflective foil
- Minimum 140mm cavity with timber or steel, rafters, purlins or trusses
- Insulation as specified in the table
- Plasterboard ceiling lining as specified in the table

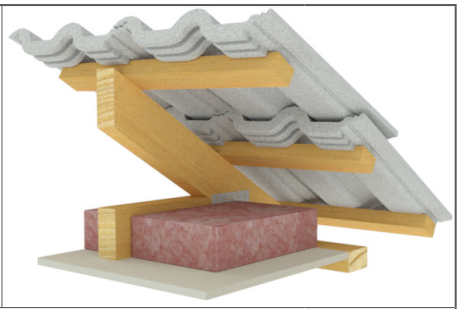

System	Ceiling Lining	Airborne Sound Insulation Rw (Rw + Ctr)		
		Pink® Batts Ceiling R2.5	Polyester Batts Ceiling R2.5	
CUR110	1 layer of 10mm **masta**shield or **span**shield	50 (41)	50 (40)	Report Day Design 5008-24 3094-25 [1] TL458Ra
CUR111	2 layers of 10mm **masta**shield or **span**shield	51 (42)	51 (41)	
CUR114	1 layer of 13mm **masta**shield	51 (42)	51 (41)	
CUR116	1 layer of 10mm **sound**shield or **opal**	51 (43)	51 (42)	
CUR117	2 layers of 10mm **sound**shield or **opal**	51 (44)[1]	51 (44)	
CUR118	1 layer of 13mm **sound**shield	51 (42)	51 (42)	
CUR119	2 layers of 13mm **sound**shield	52 (44)	52 (44)	

CUR120-CUR129

- Concrete or terracotta tiles
- Optional heavy duty reflective foil
- Minimum 140mm cavity with timber or steel, rafters, purlins or trusses
- A-clips and Furring Channel
- Insulation as specified in the table
- Plasterboard ceiling lining as specified in the table

[Lateral restraint of truss bottom chord must be considered, ie: bottom chord ties and steelbrace]

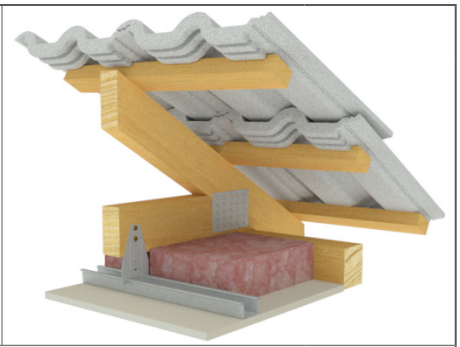

System	Ceiling Lining	Airborne Sound Insulation Rw (Rw + Ctr)		
		Pink® Batts Ceiling R2.5	Polyester Batts Ceiling R2.5	
CUR120	1 layer of 10mm **masta**shield or **span**shield	51 (44)	50 (43)	Report Day Design 5008-24 3094-25 [1]TL458Rb
CUR121	2 layers of 10mm **masta**shield or **span**shield	52 (46)	52 (46)	
CUR124	1 layer of 13mm **masta**shield	52 (45)	51 (44)	
CUR126	1 layer of 10mm **sound**shield or **opal**	52 (46)[1]	51 (45)	
CUR127	2 layers of 10mm **sound**shield or **opal**	52 (47)	52 (48)	
CUR128	1 layer of 13mm **sound**shield	52 (46)	52 (45)	
CUR129	2 layers of 13mm **sound**shield	53 (49)	53 (48)	

Insulation shown is the minimum required to meet the acoustic rating. Refer to Chapter 2 for more information.

CUR310-CUR318

- Concrete or terracotta tiles
- Optional heavy duty reflective foil
- Minimum 140mm cavity with timber or steel, rafters, purlins or trusses
- Insulation as specified in the table
- Plasterboard ceiling lining as specified in the table

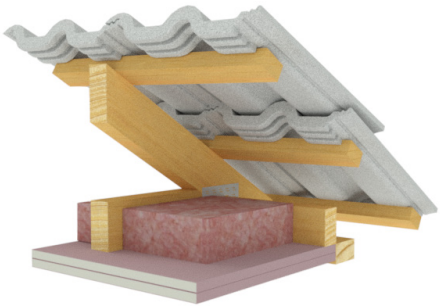

fireshield can be substituted with **multi**shield or **tru**rock

FRL Rated from below	RISF	System	Ceiling Lining	Max Framing Centres (mm)	Airborne Sound Insulation Rw (Rw + Ctr)		
Report FC14332					Pink® Batts Ceiling R2.5	Polyester Batts Ceiling R2.5	
30/30/30	-	CUR310	1 layer of 13mm **fire**shield	600	48 (42)	48 (42)	
60/60/60	-	CUR311	2 layers of 13mm **fire**shield	450	50 (44)	50 (44)	
60/60/60	-	CUR312	1 layer of 16mm **fire**shield	450	48 (43)	48 (42)	Report Day Design 5008-24 3094-50 [1]TL458RI
60/60/60	60	CUR313	1 layer of 13mm **fire**shield applied first plus 1 layer of 16mm **fire**shield	600	50 (44)	50 (44)	
60/60/60	60	CUR314	2 layers of 16mm **fire**shield	600	51 (45)	51 (45)	
90/90/90	60	CUR315	2 layers of 16mm **fire**shield	450	51 (45)[1]	51 (45)	
90/90/90	60	CUR316	3 layers of 13mm **fire**shield	450	52 (46)	52 (46)	
120/120/120	60	CUR317	1 layer of 13mm **fire**shield applied first plus 2 layers of 16mm **fire**shield	450	52 (46)	52 (46)	
120/120/120	60	CUR318	3 layers of 16mm **fire**shield	450	52 (46)	52 (46)	

CUR501

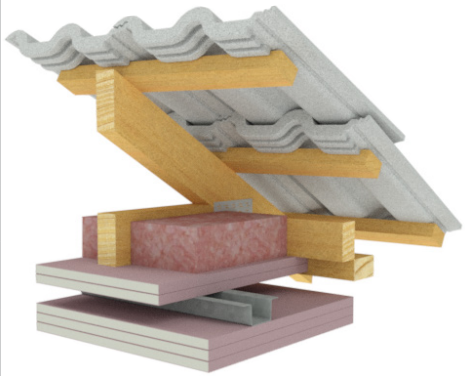

- Concrete or terracotta tiles
- Optional heavy duty reflective foil
- Minimum 140mm cavity with timber or steel, rafters, purlins or trusses
- 2 layers of 16mm **fire**shield
- Perpendicular top-hats or furring channels at maximum 450mm centres
- [Below] 3 layers of 16mm **fire**shield

Fire Resistance Level

180/180/180
rated from below only

RISF 180 minutes

Report FC14332

Sound Insulation for framing at 450mm centres
Rw (Rw + Ctr)

Pink® Batts Ceiling R2.5	Polyester Batts Ceiling R2.5	
62 (**51**)	62 (**51**)	Report INSUL v9

Insulation shown is the minimum required to meet the acoustic rating. Refer to Chapter 2 for more information.

CUR320-CUR328

- Concrete or terracotta tiles
- Optional heavy duty reflective foil
- Minimum 140mm cavity with timber or steel, rafters, purlins or trusses
- A-clips and Furring Channel
- Insulation as specified in the table
- Plasterboard ceiling lining as specified in the table

[Lateral restraint of truss bottom chord must be considered, ie: bottom chord ties and steelbrace]

fireshield can be substituted with **multi**shield or **tru**rock

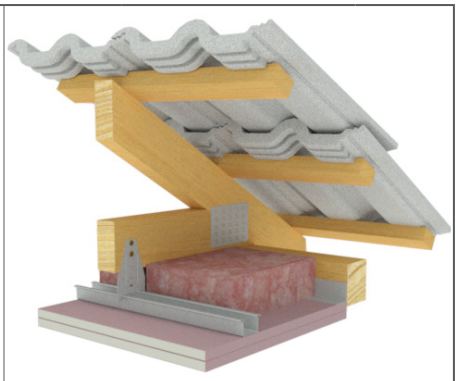

FRL Rated from below	RISF	System	Ceiling Lining	Max Framing Centres (mm)	Airborne Sound Insulation Rw (Rw + Ctr)		
Report FC14332					Pink® Batts Ceiling R2.5	Polyester Batts Ceiling R2.5	
30/30/30	-	CUR320	1 layer of 13mm **fire**shield	600	51 (45)	51 (44)	
60/60/60	-	CUR321	2 layers of 13mm **fire**shield	450	52 (47)	52 (47)	
60/60/60	-	CUR322	1 layer of 16mm **fire**shield	450	51 (46)	51 (45)	Report Day Design 5008-24 3094-50 [1]TL458Rc
60/60/60	60	CUR323	1 layer of 13mm **fire**shield applied first plus 1 layer of 16mm **fire**shield	600	53 (48)	53 (47)	
60/60/60	60	CUR324	2 layers of 16mm **fire**shield	600	54 (49)[1]	54 (48)	
90/90/90	60	CUR325	2 layers of 16mm **fire**shield	450	54 (49)	54 (48)	
90/90/90	60	CUR326	3 layers of 13mm **fire**shield	450	55 (49)	55 (49)	
120/120/120	60	CUR327	1 layer of 13mm **fire**shield applied first plus 2 layers of 16mm **fire**shield	450	55 (50)	55 (50)	
120/120/120	60	CUR328	3 layers of 16mm **fire**shield	450	56 (51)	56 (50)	

General Requirements

	Non-Fire Rated	Fire Rated
Install control joints in plasterboard ceilings: > At 12m maximum intervals > At all control joints in the structure > At any change in the substrate > At the junction of a larger room and passageway.	✓	✓
All ceilings in this section are non-trafficable. Do not walk on plasterboard ceilings!	✓	✓
Limit dead loads on plasterboard ceilings to 2 kg/m^2 for plasterboard spanning 600mm framing centres.	✓	✓
Limit dead loads on plasterboard ceilings to 2.5 kg/m^2 for plasterboard spanning 450mm framing centres where the plasterboard can usually span 600mm centres.	✓	✓
Only joint the face layer. As a minimum, use paper tape with either masta**base** or masta**longset**.		✓
Use approved fire rated penetration details. Fire penetrations may require fire collars or other devices to maintain fire performance.		✓
Use **bindex** fire and acoustic sealant on all gaps and around perimeter.		✓
Attach ceiling fixtures to framing members only. Ensure the framing is designed to carry any additional load.	✓	✓
All structures supporting fire rated ceilings must have an equal or greater FRL than the ceiling they support eg, a ceiling with FRL of 90/90/90 must be supported by a load bearing wall or column with FRL of at least 90 minutes.		✓

> Structural beams enclosed by a fire rated ceiling are given the same structural protection rating as the ceiling eg, a structural beam located above a ceiling rated to FRL 90/90/90 would have FRL of 90/–/–.

> Compensate for uneven framing by attaching a furring channel system with adjustable direct fix clips.

> Timber trusses may settle or move with changing seasons. Reduce occurrence of plasterboard cracking due to this movement by fixing plasterboard to furring channel or battens.

> The FRL and RISF will not be reduced if a fire rated ceiling is built on an angle eg, a raked ceiling.

> Consider the corrosive effect of sea spray on steel components, select framing and fasteners accordingly.

> The FRL will not be reduced if the insulation directly above plasterboard is omitted.

> Plasterboard installations in close proximity to metal roofs (ie: raked ceiling or with small ceiling cavities) require smaller control joint intervals as they are exposed to larger rates of thermal expansion.

> Excessive vibration of the ceiling (by installing ceiling services, etc) is known to cause joint cracking and joint peaking.

> Locate ceiling services so they do not cut through ceiling framing members, otherwise some degradation of the ceiling can be expected.

Framing

	Non-Fire Rated	Fire Rated
Framing members as per framing table or structural design up to 600mm maximum.	✓	✓
For a specific project, determine the relevant wind pressure load on an internal ceiling from Section 2.3, or the QR link below. Wind pressure loads must be considered for internal ceilings to comply with *AS/NZS 1170.2 Wind Actions* and *AS/NZS 2785 Suspended Ceilings - Design and Installation.*	✓	✓
Stagger joins in adjacent Top Cross Rails and Furring Channels by 1200mm	✓	✓
Install additional framing members around openings.	✓	✓

Siniat Internal Wind Load Calculator

Refer to Section 2.3 for assistance determining the relevant internal wind pressures for a specific project. Or use the Siniat Internal Wind Load Calculator by clicking on the link or by using your phone's camera on the QR code.

Timber battens are not permitted in fire rated ceilings.

Table 1 Maximum Perimeter Track Anchor Spacing

Ceiling Framing Member Spacing (mm)	Maximum Anchor Spacing (mm)
600	600
450	600
400	600
300	450

1. Additional anchors 100mm maximum from track ends.
2. 150mm tracks require 2 anchors across width.

Table 2 Maximum Span (Framing Spacing) for Plasterboard

Plasterboard Type	General Internal Areas	Areas of Intermittent High Humidity eg. Unventilated Bathrooms, Basements and External Ceilings
10mm **masta**shield	450mm	300mm
13mm **masta**shield	600mm	450mm
10mm **span**shield	600mm	450mm
10mm **opal**	600mm	450mm
10mm and 13mm **sound**shield	600mm	450mm
10mm and 13mm **water**shield	600mm	450mm
13mm and 16mm **fire**shield	600mm	450mm
13mm and 16mm **multi**shield	600mm	450mm
13mm and 16mm **tru**rock	600mm	450mm
13mm and 16mm **tru**rock hd	600mm	450mm

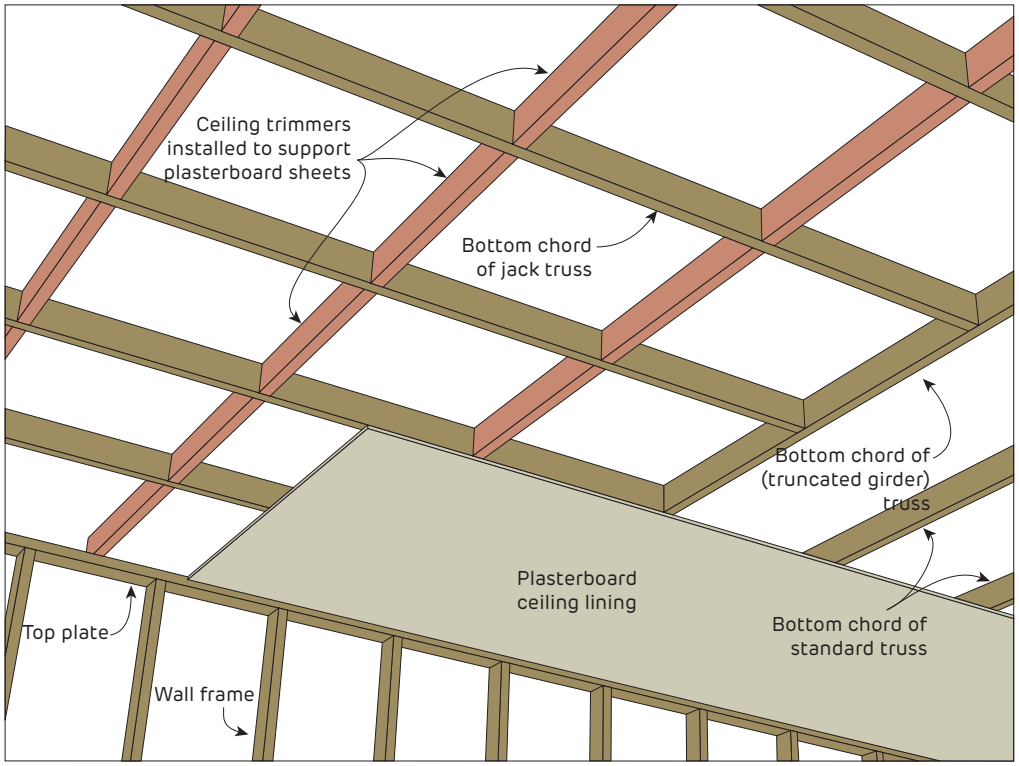

FIGURE 1 Trimmers to Support Ceiling Lining at Change of Truss Direction
Perspective

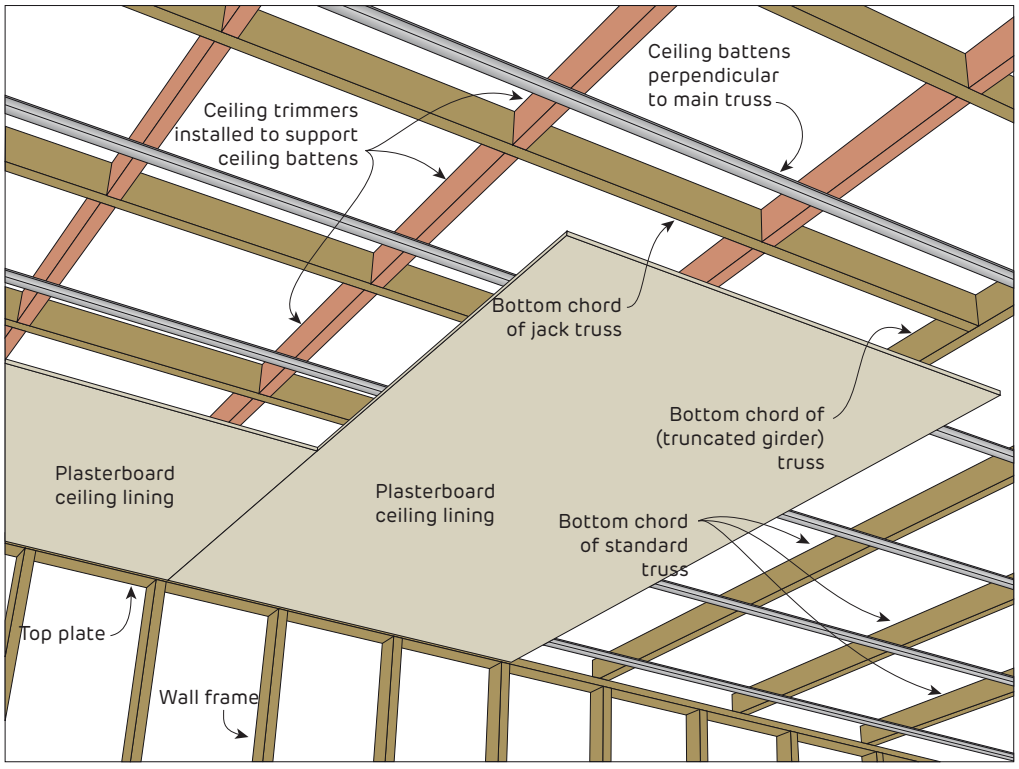

FIGURE 2 Trimmers to Support Ceiling Battens at Change of Truss Direction
Perspective

Fire Rated and Non-Fire Rated
Internal Direct Fix Ceiling Frames

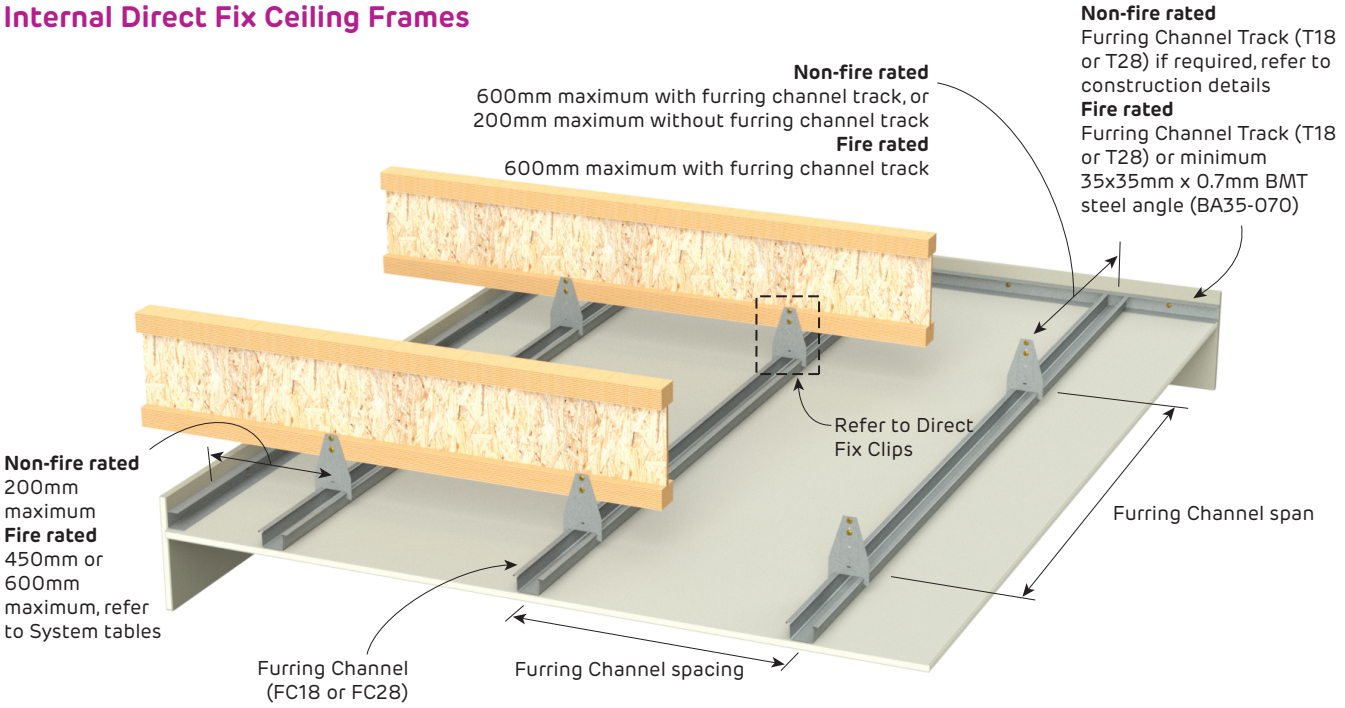

FIGURE 3 Direct Fix Furring Channel Ceiling Frame
Fire rated and Non-fire rated
Perspective

Fire Rated and Non-Fire Rated
Details for Single Span, Double Span or 3-or-More Span Ceilings

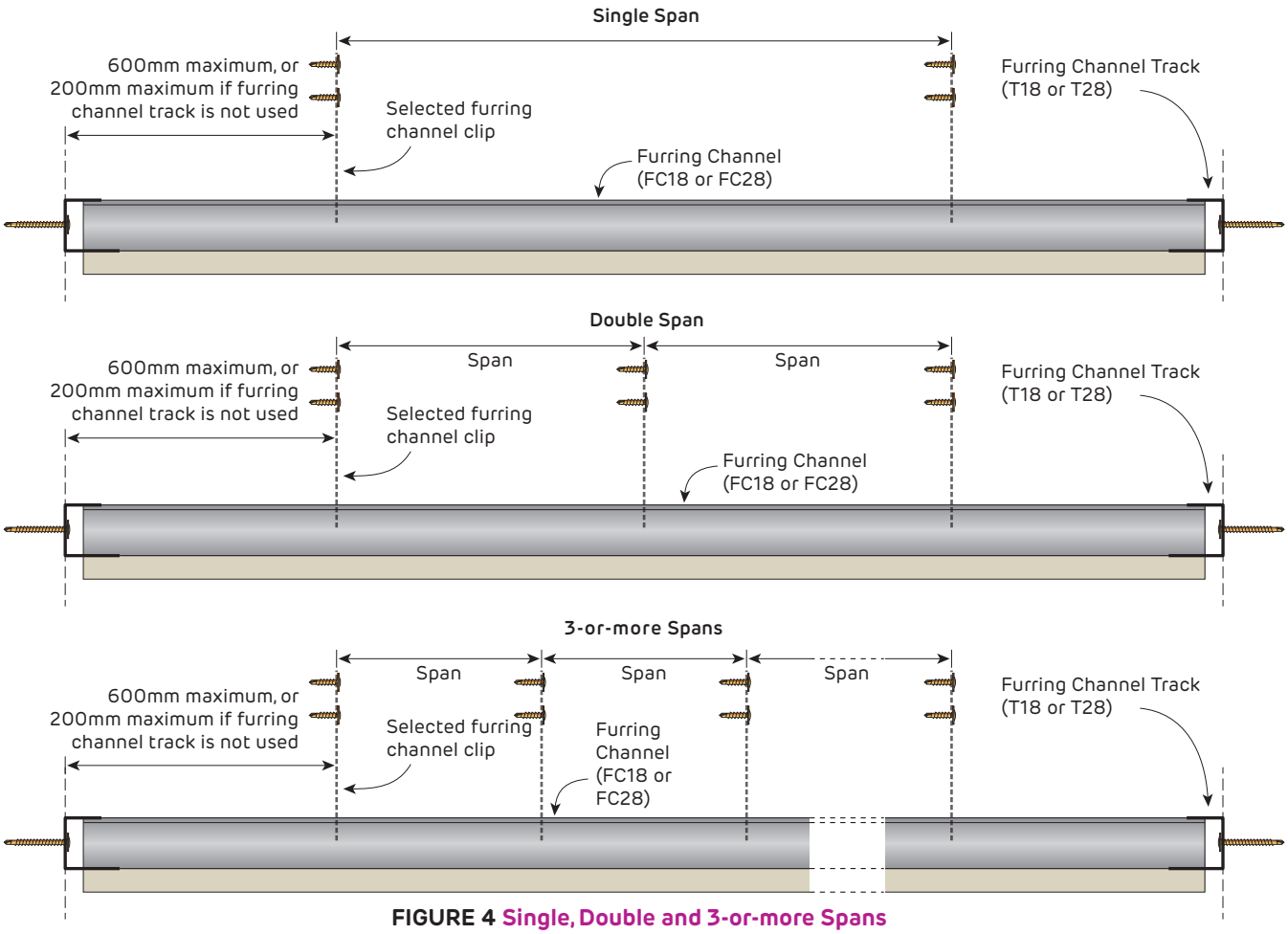

FIGURE 4 Single, Double and 3-or-more Spans
Section

Table 3 28mm Furring Channel Ceiling Span Table - REGION A

Refer to Section 2.3 for assistance determining the relevant wind pressures for a specific project.

28mm Furring Channel (AFC28) Ceiling Span Table	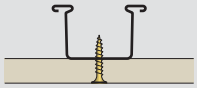	Up to BCA Building Importance Level 3	Ultimate pressure W_U (kPa)	0.39
			Serviceability pressure W_S (kPa)	0.25

Ceiling Lining	Furring Channel Spacing (mm)	Single Span		Double Span		3-or-more Spans	
		Span (mm)	Connection Demand (kN)	Spans (mm)	Connection Demand (kN)	Spans (mm)	Connection Demand (kN)
1 layer of 10mm	600	1260	0.21	1680	0.71	1560	0.60
	450	1390	0.18	1870	0.59	1720	0.50
	400	1450	0.16	1940	0.55	1790	0.46
	300	1590	0.13	2140	0.45	1970	0.38
2 layers of 10mm	600	1180	0.23	1550	0.77	1460	0.66
	450	1300	0.19	1740	0.65	1610	0.55
	400	1350	0.18	1810	0.60	1670	0.51
	300	1490	0.15	2000	0.50	1840	0.42
1 layer of 13mm	600	1220	0.22	1620	0.74	1510	0.63
	450	1350	0.19	1810	0.62	1660	0.52
	400	1400	0.17	1880	0.57	1730	0.48
	300	1540	0.14	2070	0.47	1910	0.40
2 layers of 13mm	600	1120	0.25	1450	0.82	1380	0.72
	450	1230	0.21	1650	0.70	1520	0.59
	400	1280	0.19	1720	0.65	1580	0.55
	300	1410	0.16	1890	0.54	1740	0.45
3 layers of 13mm	600	1010	0.27	1330	0.90	1250	0.78
	450	1110	0.23	1490	0.76	1370	0.64
	400	1150	0.21	1550	0.70	1430	0.59
	300	1270	0.17	1700	0.58	1570	0.49
1 layer of 16mm	600	1210	0.22	1610	0.75	1500	0.64
	450	1340	0.19	1800	0.63	1660	0.53
	400	1390	0.17	1870	0.58	1720	0.49
	300	1530	0.14	2060	0.48	1900	0.40
2 layers of 16mm	600	1110	0.26	1430	0.83	1370	0.73
	450	1220	0.21	1640	0.71	1510	0.60
	400	1270	0.20	1700	0.66	1570	0.56
	300	1400	0.16	1870	0.54	1730	0.46
3 layers of 16mm	600	990	0.28	1310	0.91	1230	0.78
	450	1090	0.23	1460	0.76	1350	0.65
	400	1130	0.21	1520	0.71	1400	0.60
	300	1250	0.17	1680	0.59	1550	0.49

1. Table based upon downward (suction) and upward (uplift) pressures, intended for internal use only.
2. Table includes self weight and 2 kg/m² insulation weight with an additional 3 kg/m² service load. No further allowance for additional point loads or live loads.
3. Contact Siniat or a structural engineer to check ceiling for earthquake actions. Specific project information is required.
4. Table refers to Siniat Furring Channel of Base Metal Thickness (BMT) 0.42mm of grade G550 steel with Zincalume™ AM150 corrosion protection. Maximum production lengths available are 6.0m
5. Designed in accordance with *AS/NZS 4600:2018 Cold Formed Steel Structures* and *AS/NZS 2785:2020 Suspended Ceilings - Design and Installation.*
6. Wind pressures determined in accordance with *AS/NZS 1170.2 Wind Actions.*
7. Connections to clips must be checked with the *Clip Capacity Table.*
8. Ultimate Limit State Load Case 1: 1.2G + Wu (Suction) + $Q_{0.03kPa\ Service\ Load}$
   Ultimate Limit State Load Case 2: 0.9G + Wu (Uplift).
9. Serviceability Limit State Load Case 1: G, with deflection limited to Span/360. For gloss or brittle ceiling finishes contact Siniat for Span/500 deflection limit.
   Serviceability Limit State Load Case 2: Ws, with deflection limited to Span/200.
10. Perimeter anchors at 600mm maximum centres and 100mm maximum from track ends with minimum 0.7 kN shear capacity.
11. The nominated lateral pressures and deflection limits must be checked for suitability for a specific project.
12. For BCA Building Importance Level 4, please contact Siniat.

Siniat Internal Wind Load Calculator

Refer to Section 2.3 for assistance determining the relevant internal wind pressures for a specific project. Or use the Siniat Internal Wind Load Calculator by clicking on the link or by using your phone's camera on the QR code.

Table 4 28mm Furring Channel Ceiling Span Table - REGION A

Refer to Section 2.3 for assistance determining the relevant wind pressures for a specific project.

28mm Furring Channel (AFC28) Ceiling Span Table	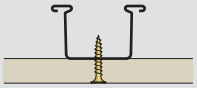	Up to BCA Building Importance Level 3	Ultimate pressure W_U (kPa)	0.46
			Serviceability pressure W_S (kPa)	0.3

Ceiling Lining	Furring Channel Spacing (mm)	Single Span		Double Span		3-or-more Spans	
		Span (mm)	Connection Demand (kN)	Spans (mm)	Connection Demand (kN)	Spans (mm)	Connection Demand (kN)
1 layer of 10mm	600	1210	0.23	1590	0.75	1500	0.65
	450	1330	0.19	1790	0.64	1650	0.54
	400	1390	0.18	1860	0.59	1720	0.50
	300	1530	0.15	2050	0.49	1890	0.41
2 layers of 10mm	600	1140	0.25	1470	0.81	1410	0.71
	450	1250	0.21	1680	0.69	1550	0.58
	400	1300	0.19	1750	0.64	1610	0.54
	300	1440	0.16	1930	0.53	1780	0.45
1 layer of 13mm	600	1170	0.24	1530	0.78	1450	0.68
	450	1290	0.20	1740	0.67	1600	0.56
	400	1350	0.18	1810	0.62	1670	0.52
	300	1480	0.15	1990	0.51	1830	0.43
2 layers of 13mm	600	1080	0.27	1390	0.86	1340	0.76
	450	1190	0.22	1600	0.74	1480	0.63
	400	1240	0.21	1670	0.69	1540	0.58
	300	1370	0.17	1830	0.57	1690	0.48
3 layers of 13mm	600	1010	0.30	1280	0.94	1250	0.84
	450	1110	0.24	1480	0.81	1370	0.69
	400	1150	0.22	1550	0.76	1430	0.64
	300	1270	0.19	1700	0.62	1570	0.52
1 layer of 16mm	600	1170	0.24	1520	0.78	1450	0.68
	450	1290	0.20	1730	0.67	1590	0.56
	400	1340	0.18	1800	0.62	1660	0.52
	300	1470	0.15	1980	0.51	1820	0.43
2 layers of 16mm	600	1080	0.27	1370	0.87	1330	0.77
	450	1180	0.22	1590	0.75	1470	0.64
	400	1230	0.21	1650	0.70	1520	0.59
	300	1360	0.17	1820	0.58	1680	0.49
3 layers of 16mm	600	990	0.30	1260	0.95	1230	0.84
	450	1090	0.25	1460	0.82	1350	0.69
	400	1130	0.23	1520	0.76	1400	0.64
	300	1250	0.19	1680	0.63	1550	0.53

1. Table based upon downward (suction) and upward (uplift) pressures, intended for internal use only.
2. Table includes self weight and 2 kg/m² insulation weight with an additional 3 kg/m² service load. No further allowance for additional point loads or live loads.
3. Contact Siniat or a structural engineer to check ceiling for earthquake actions. Specific project information is required.
4. Table refers to Siniat Furring Channel of Base Metal Thickness (BMT) 0.42mm of grade G550 steel with Zincalume™ AM150 corrosion protection. Maximum production lengths available are 6.0m
5. Designed in accordance with *AS/NZS 4600:2018 Cold Formed Steel Structures* and *AS/NZS 2785:2020 Suspended Ceilings - Design and Installation.*
6. Wind pressures determined in accordance with *AS/NZS 1170.2 Wind Actions.*
7. Connections to clips must be checked with the *Clip Capacity Table.*
8. Ultimate Limit State Load Case 1: 1.2G + Wu (Suction) + $Q_{0.03kPa\ Service\ Load}$
   Ultimate Limit State Load Case 2: 0.9G + Wu (Uplift).
9. Serviceability Limit State Load Case 1: G, with deflection limited to Span/360. For gloss or brittle ceiling finishes contact Siniat for Span/500 deflection limit.
   Serviceability Limit State Load Case 2: Ws, with deflection limited to Span/200.
10. Perimeter anchors at 600mm maximum centres and 100mm maximum from track ends with minimum 0.7 kN shear capacity.
11. The nominated lateral pressures and deflection limits must be checked for suitability for a specific project.
12. For BCA Building Importance Level 4, please contact Siniat.

Table 5 28mm Furring Channel Ceiling Span Table - REGION B

Refer to Section 2.3 for assistance determining the relevant wind pressures for a specific project.

28mm Furring Channel (AFC28) Ceiling Span Table	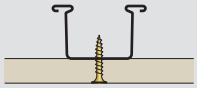	Up to BCA Building Importance Level 3	Ultimate pressure W_U (kPa)	0.59
			Serviceability pressure W_S (kPa)	0.25

Ceiling Lining	Furring Channel Spacing (mm)	Single Span		Double Span		3-or-more Spans	
		Span (mm)	Connection Demand (kN)	Spans (mm)	Connection Demand (kN)	Spans (mm)	Connection Demand (kN)
1 layer of 10mm	600	1160	0.27	1440	0.82	1450	0.76
	450	1340	0.23	1670	0.72	1670	0.66
	400	1420	0.22	1770	0.68	1770	0.62
	300	1590	0.18	2050	0.59	1970	0.52
2 layers of 10mm	600	1090	0.28	1360	0.88	1360	0.81
	450	1260	0.24	1570	0.76	1570	0.70
	400	1330	0.23	1660	0.72	1670	0.66
	300	1490	0.19	1920	0.62	1840	0.54
1 layer of 13mm	600	1120	0.27	1400	0.85	1400	0.78
	450	1300	0.24	1620	0.74	1620	0.67
	400	1380	0.22	1720	0.70	1720	0.64
	300	1540	0.19	1990	0.60	1910	0.53
2 layers of 13mm	600	1030	0.30	1290	0.93	1290	0.85
	450	1190	0.26	1490	0.80	1490	0.73
	400	1260	0.24	1580	0.76	1580	0.69
	300	1410	0.20	1830	0.66	1740	0.57
3 layers of 13mm	600	960	0.32	1200	0.99	1200	0.91
	450	1110	0.28	1390	0.86	1370	0.78
	400	1150	0.25	1470	0.81	1430	0.72
	300	1270	0.21	1700	0.70	1570	0.59
1 layer of 16mm	600	1120	0.27	1400	0.86	1400	0.79
	450	1290	0.24	1610	0.74	1610	0.68
	400	1370	0.22	1710	0.70	1710	0.64
	300	1530	0.19	1980	0.61	1900	0.53
2 layers of 16mm	600	1020	0.30	1280	0.94	1280	0.86
	450	1180	0.26	1480	0.81	1480	0.74
	400	1250	0.24	1570	0.76	1570	0.70
	300	1400	0.20	1810	0.66	1730	0.58
3 layers of 16mm	600	950	0.32	1190	1.01	1190	0.92
	450	1090	0.28	1370	0.87	1350	0.78
	400	1130	0.26	1450	0.82	1400	0.72
	300	1250	0.21	1680	0.71	1550	0.60

1. Table based upon downward (suction) and upward (uplift) pressures, intended for internal use only.
2. Table includes self weight and 2 kg/m^2 insulation weight with an additional 3 kg/m^2 service load. No further allowance for additional point loads or live loads.
3. Contact Siniat or a structural engineer to check ceiling for earthquake actions. Specific project information is required.
4. Table refers to Siniat Furring Channel of Base Metal Thickness (BMT) 0.42mm of grade G550 steel with Zincalume™ AM150 corrosion protection. Maximum production lengths available are 6.0m
5. Designed in accordance with *AS/NZS 4600:2018 Cold Formed Steel Structures* and *AS/NZS 2785:2020 Suspended Ceilings - Design and Installation.*
6. Wind pressures determined in accordance with *AS/NZS 1170.2 Wind Actions.*
7. Connections to clips must be checked with the *Clip Capacity Table.*
8. Ultimate Limit State Load Case 1: 1.2G + Wu (Suction) + $Q_{0.03kPa\ Service\ Load}$
   Ultimate Limit State Load Case 2: 0.9G + Wu (Uplift).
9. Serviceability Limit State Load Case 1: G, with deflection limited to Span/360. For gloss or brittle ceiling finishes contact Siniat for Span/500 deflection limit.
   Serviceability Limit State Load Case 2: Ws, with deflection limited to Span/200.
10. Perimeter anchors at 600mm maximum centres and 100mm maximum from track ends with minimum 0.7 kN shear capacity.
11. The nominated lateral pressures and deflection limits must be checked for suitability for a specific project.
12. For BCA Building Importance Level 4, please contact Siniat.

Table 6 28mm Furring Channel Ceiling Span Table - REGION B

Refer to Section 2.3 for assistance determining the relevant wind pressures for a specific project.

28mm Furring Channel (AFC28) Ceiling Span Table	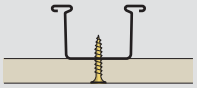	Up to BCA Building Importance Level 3	Ultimate pressure W_U (kPa)	0.71
			Serviceability pressure W_S (kPa)	0.3

Ceiling Lining	Furring Channel Spacing (mm)	Single Span		Double Span		3-or-more Spans	
		Span (mm)	Connection Demand (kN)	Spans (mm)	Connection Demand (kN)	Spans (mm)	Connection Demand (kN)
1 layer of 10mm	600	1070	0.28	1340	0.89	1340	0.81
	450	1240	0.25	1550	0.77	1550	0.70
	400	1320	0.23	1650	0.73	1650	0.67
	300	1520	0.20	1900	0.63	1890	0.57
2 layers of 10mm	600	1020	0.30	1270	0.94	1270	0.86
	450	1180	0.26	1470	0.81	1470	0.74
	400	1250	0.25	1560	0.77	1560	0.70
	300	1440	0.21	1800	0.66	1780	0.60
1 layer of 13mm	600	1050	0.29	1310	0.91	1310	0.84
	450	1210	0.25	1510	0.79	1510	0.72
	400	1280	0.24	1600	0.74	1610	0.68
	300	1480	0.21	1850	0.64	1830	0.58
2 layers of 13mm	600	970	0.31	1220	0.99	1220	0.90
	450	1120	0.27	1400	0.85	1410	0.78
	400	1190	0.26	1490	0.80	1490	0.73
	300	1370	0.22	1720	0.69	1690	0.62
3 layers of 13mm	600	910	0.33	1140	1.05	1140	0.96
	450	1050	0.29	1320	0.91	1320	0.83
	400	1120	0.27	1400	0.86	1400	0.78
	300	1270	0.23	1610	0.74	1570	0.66
1 layer of 16mm	600	1040	0.29	1300	0.91	1300	0.84
	450	1200	0.25	1500	0.79	1510	0.73
	400	1280	0.24	1600	0.75	1600	0.69
	300	1470	0.21	1840	0.65	1820	0.59
2 layers of 16mm	600	960	0.32	1210	0.99	1210	0.91
	450	1110	0.27	1390	0.86	1390	0.78
	400	1180	0.26	1480	0.81	1480	0.74
	300	1360	0.22	1710	0.70	1680	0.63
3 layers of 16mm	600	900	0.34	1130	1.06	1130	0.97
	450	1040	0.29	1300	0.91	1300	0.84
	400	1110	0.28	1380	0.86	1380	0.79
	300	1250	0.23	1600	0.75	1550	0.66

1. Table based upon downward (suction) and upward (uplift) pressures, intended for internal use only.
2. Table includes self weight and 2 kg/m² insulation weight with an additional 3 kg/m² service load. No further allowance for additional point loads or live loads.
3. Contact Siniat or a structural engineer to check ceiling for earthquake actions. Specific project information is required.
4. Table refers to Siniat Furring Channel of Base Metal Thickness (BMT) 0.42mm of grade G550 steel with Zincalume™ AM150 corrosion protection. Maximum production lengths available are 6.0m
5. Designed in accordance with *AS/NZS 4600:2018 Cold Formed Steel Structures* and *AS/NZS 2785:2020 Suspended Ceilings - Design and Installation.*
6. Wind pressures determined in accordance with *AS/NZS 1170.2 Wind Actions.*
7. Connections to clips must be checked with the *Clip Capacity Table.*
8. Ultimate Limit State Load Case 1: 1.2G + Wu (Suction) + $Q_{0.03kPa\ Service\ Load}$
   Ultimate Limit State Load Case 2: 0.9G + Wu (Uplift).
9. Serviceability Limit State Load Case 1: G, with deflection limited to Span/360. For gloss or brittle ceiling finishes contact Siniat for Span/500 deflection limit.
   Serviceability Limit State Load Case 2: Ws, with deflection limited to Span/200.
10. Perimeter anchors at 600mm maximum centres and 100mm maximum from track ends with minimum 0.7 kN shear capacity.
11. The nominated lateral pressures and deflection limits must be checked for suitability for a specific project.
12. For BCA Building Importance Level 4, please contact Siniat.

Table 7 18mm Furring Channel Ceiling Span Table - REGION A

Refer to Section 2.3 for assistance determining the relevant wind pressures for a specific project.

18mm Furring Channel (AFC18) Ceiling Span Table	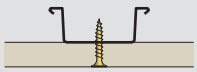	Up to BCA Building Importance Level 3	Ultimate pressure W_U (kPa)	0.39
			Serviceability pressure W_S (kPa)	0.25

Ceiling Lining	Furring Channel Spacing (mm)	Single Span		Double Span		3-or-more Spans	
		Span (mm)	Connection Demand (kN)	Spans (mm)	Connection Demand (kN)	Spans (mm)	Connection Demand (kN)
1 layer of 10mm	600	860	0.14	1150	0.48	1060	0.40
	450	940	0.12	1270	0.40	1170	0.34
	400	980	0.11	1320	0.37	1210	0.31
	300	1080	0.09	1450	0.30	1340	0.26
2 layers of 10mm	600	770	0.15	1040	0.51	960	0.43
	450	850	0.13	1140	0.42	1050	0.36
	400	880	0.12	1190	0.39	1100	0.33
	300	970	0.10	1310	0.32	1210	0.27
1 layer of 13mm	600	830	0.15	1110	0.50	1020	0.42
	450	910	0.12	1220	0.41	1130	0.35
	400	950	0.11	1270	0.38	1170	0.32
	300	1040	0.09	1400	0.32	1290	0.27
2 layers of 13mm	600	690	0.16	930	0.52	860	0.44
	450	760	0.13	1020	0.43	940	0.36
	400	790	0.12	1060	0.40	980	0.34
	300	870	0.10	1170	0.33	1080	0.28
3 layers of 13mm	600	610	0.16	820	0.55	760	0.47
	450	670	0.14	900	0.46	830	0.38
	400	700	0.13	940	0.42	870	0.36
	300	770	0.10	1030	0.35	950	0.29
1 layer of 16mm	600	820	0.15	1100	0.50	1020	0.43
	450	910	0.13	1220	0.42	1120	0.35
	400	940	0.12	1270	0.39	1170	0.33
	300	1040	0.10	1390	0.32	1280	0.27
2 layers of 16mm	600	680	0.16	910	0.52	840	0.44
	450	750	0.13	1010	0.44	930	0.37
	400	780	0.12	1050	0.40	960	0.34
	300	860	0.10	1150	0.33	1060	0.28
3 layers of 16mm	600	600	0.17	810	0.56	740	0.47
	450	660	0.14	890	0.46	820	0.39
	400	690	0.13	920	0.43	850	0.36
	300	760	0.11	1020	0.35	940	0.30

1. Table based upon downward (suction) and upward (uplift) pressures, intended for internal use only.
2. Table includes self weight and 2 kg/m^2 insulation weight with an additional 3 kg/m^2 service load. No further allowance for additional point loads or live loads.
3. Contact Siniat or a structural engineer to check ceiling for earthquake actions. Specific project information is required.
4. Table refers to Siniat Furring Channel of Base Metal Thickness (BMT) 0.42mm of grade G550 steel with Zincalume™ AM150 corrosion protection. Maximum production lengths available are 6.0m
5. Designed in accordance with *AS/NZS 4600:2018 Cold Formed Steel Structures* and *AS/NZS 2785:2020 Suspended Ceilings - Design and Installation.*
6. Wind pressures determined in accordance with *AS/NZS 1170.2 Wind Actions.*
7. Connections to clips must be checked with the *Clip Capacity Table.*
8. Ultimate Limit State Load Case 1: 1.2G + Wu (Suction) + $Q_{0.03kPa\ Service\ Load}$
   Ultimate Limit State Load Case 2: 0.9G + Wu (Uplift).
9. Serviceability Limit State Load Case 1: G, with deflection limited to Span/360. For gloss or brittle ceiling finishes contact Siniat for Span/500 deflection limit.
   Serviceability Limit State Load Case 2: Ws, with deflection limited to Span/200.
10. Perimeter anchors at 600mm maximum centres and 100mm maximum from track ends with minimum 0.7 kN shear capacity.
11. The nominated lateral pressures and deflection limits must be checked for suitability for a specific project.
12. For BCA Building Importance Level 4, please contact Siniat.

Table 8 18mm Furring Channel Ceiling Span Table - REGION A

Refer to Section 2.3 for assistance determining the relevant wind pressures for a specific project.

18mm Furring Channel (AFC18) Ceiling Span Table	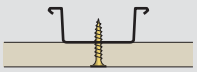	Up to BCA Building Importance Level 3	Ultimate pressure W_U (kPa)	0.46
			Serviceability pressure W_S (kPa)	0.3

Ceiling Lining	Furring Channel Spacing (mm)	Single Span		Double Span		3-or-more Spans	
		Span (mm)	Connection Demand (kN)	Spans (mm)	Connection Demand (kN)	Spans (mm)	Connection Demand (kN)
1 layer of 10mm	600	820	0.15	1100	0.52	1020	0.44
	450	900	0.13	1210	0.43	1120	0.36
	400	940	0.12	1260	0.39	1160	0.33
	300	1030	0.10	1390	0.33	1280	0.28
2 layers of 10mm	600	770	0.17	1040	0.57	950	0.47
	450	850	0.14	1140	0.47	1050	0.39
	400	880	0.13	1190	0.43	1090	0.36
	300	970	0.11	1310	0.36	1200	0.30
1 layer of 13mm	600	800	0.16	1070	0.54	990	0.46
	450	880	0.13	1180	0.45	1080	0.37
	400	910	0.12	1220	0.41	1130	0.35
	300	1000	0.10	1350	0.34	1240	0.29
2 layers of 13mm	600	690	0.17	930	0.57	860	0.48
	450	760	0.14	1020	0.47	940	0.40
	400	790	0.13	1060	0.44	980	0.37
	300	870	0.11	1170	0.36	1080	0.30
3 layers of 13mm	600	610	0.18	820	0.60	760	0.50
	450	670	0.15	900	0.49	830	0.41
	400	700	0.14	940	0.46	870	0.39
	300	770	0.11	1030	0.37	950	0.32
1 layer of 16mm	600	790	0.16	1060	0.54	980	0.46
	450	870	0.13	1170	0.45	1080	0.38
	400	910	0.12	1220	0.42	1120	0.35
	300	1000	0.10	1340	0.34	1240	0.29
2 layers of 16mm	600	680	0.17	910	0.57	840	0.48
	450	750	0.14	1010	0.48	930	0.40
	400	780	0.13	1050	0.44	960	0.37
	300	860	0.11	1150	0.36	1060	0.30
3 layers of 16mm	600	600	0.18	810	0.60	740	0.50
	450	660	0.15	890	0.50	820	0.42
	400	690	0.14	920	0.46	850	0.39
	300	760	0.11	1020	0.38	940	0.32

1. Table based upon downward (suction) and upward (uplift) pressures, intended for internal use only.
2. Table includes self weight and 2 kg/m² insulation weight with an additional 3 kg/m² service load. No further allowance for additional point loads or live loads.
3. Contact Siniat or a structural engineer to check ceiling for earthquake actions. Specific project information is required.
4. Table refers to Siniat Furring Channel of Base Metal Thickness (BMT) 0.42mm of grade G550 steel with Zincalume™ AM150 corrosion protection. Maximum production lengths available are 6.0m
5. Designed in accordance with *AS/NZS 4600:2018 Cold Formed Steel Structures* and *AS/NZS 2785:2020 Suspended Ceilings - Design and Installation.*
6. Wind pressures determined in accordance with *AS/NZS 1170.2 Wind Actions.*
7. Connections to clips must be checked with the *Clip Capacity Table.*
8. Ultimate Limit State Load Case 1: 1.2G + Wu (Suction) + $Q_{0.03kPa\ Service\ Load}$
   Ultimate Limit State Load Case 2: 0.9G + Wu (Uplift).
9. Serviceability Limit State Load Case 1: G, with deflection limited to Span/360. For gloss or brittle ceiling finishes contact Siniat for Span/500 deflection limit.
   Serviceability Limit State Load Case 2: Ws, with deflection limited to Span/200.
10. Perimeter anchors at 600mm maximum centres and 100mm maximum from track ends with minimum 0.7 kN shear capacity.
11. The nominated lateral pressures and deflection limits must be checked for suitability for a specific project.
12. For BCA Building Importance Level 4, please contact Siniat.

Table 9 18mm Furring Channel Ceiling Span Table - REGION B

Refer to Section 2.3 for assistance determining the relevant wind pressures for a specific project.

18mm Furring Channel (AFC18) Ceiling Span Table	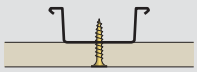	Up to BCA Building Importance Level 3	Ultimate pressure W_U (kPa)	0.59
			Serviceability pressure W_S (kPa)	0.25

Ceiling Lining	Furring Channel Spacing (mm)	Single Span		Double Span		3-or-more Spans	
		Span (mm)	Connection Demand (kN)	Spans (mm)	Connection Demand (kN)	Spans (mm)	Connection Demand (kN)
1 layer of 10mm	600	860	0.20	1030	0.58	1060	0.55
	450	940	0.16	1200	0.51	1170	0.46
	400	980	0.15	1270	0.48	1210	0.42
	300	1080	0.12	1450	0.41	1340	0.35
2 layers of 10mm	600	770	0.20	970	0.62	960	0.56
	450	850	0.16	1120	0.54	1050	0.46
	400	880	0.15	1190	0.51	1100	0.43
	300	970	0.12	1310	0.42	1210	0.36
1 layer of 13mm	600	830	0.20	1000	0.60	1020	0.56
	450	910	0.16	1160	0.52	1130	0.47
	400	950	0.15	1230	0.49	1170	0.43
	300	1040	0.13	1400	0.42	1290	0.36
2 layers of 13mm	600	690	0.20	920	0.66	860	0.56
	450	760	0.16	1020	0.55	940	0.46
	400	790	0.15	1060	0.50	980	0.43
	300	870	0.12	1170	0.42	1080	0.35
3 layers of 13mm	600	610	0.20	820	0.68	760	0.57
	450	670	0.17	900	0.56	830	0.47
	400	700	0.15	940	0.52	870	0.44
	300	770	0.13	1030	0.42	950	0.36
1 layer of 16mm	600	820	0.20	1000	0.61	1020	0.57
	450	910	0.17	1150	0.53	1120	0.47
	400	940	0.15	1220	0.50	1170	0.43
	300	1040	0.13	1390	0.42	1280	0.36
2 layers of 16mm	600	680	0.20	910	0.66	840	0.56
	450	750	0.16	1010	0.55	930	0.46
	400	780	0.15	1050	0.51	960	0.42
	300	860	0.12	1150	0.42	1060	0.35
3 layers of 16mm	600	600	0.20	810	0.68	740	0.57
	450	660	0.17	890	0.56	820	0.47
	400	690	0.16	920	0.52	850	0.44
	300	760	0.13	1020	0.43	940	0.36

1. Table based upon downward (suction) and upward (uplift) pressures, intended for internal use only.
2. Table includes self weight and 2 kg/m^2 insulation weight with an additional 3 kg/m^2 service load. No further allowance for additional point loads or live loads.
3. Contact Siniat or a structural engineer to check ceiling for earthquake actions. Specific project information is required.
4. Table refers to Siniat Furring Channel of Base Metal Thickness (BMT) 0.42mm of grade G550 steel with Zincalume™ AM150 corrosion protection. Maximum production lengths available are 6.0m
5. Designed in accordance with *AS/NZS 4600:2018 Cold Formed Steel Structures* and *AS/NZS 2785:2020 Suspended Ceilings - Design and Installation.*
6. Wind pressures determined in accordance with *AS/NZS 1170.2 Wind Actions.*
7. Connections to clips must be checked with the *Clip Capacity Table.*
8. Ultimate Limit State Load Case 1: 1.2G + Wu (Suction) + $Q_{0.03kPa\ Service\ Load}$
   Ultimate Limit State Load Case 2: 0.9G + Wu (Uplift).
9. Serviceability Limit State Load Case 1: G, with deflection limited to Span/360. For gloss or brittle ceiling finishes contact Siniat for Span/500 deflection limit.
   Serviceability Limit State Load Case 2: Ws, with deflection limited to Span/200.
10. Perimeter anchors at 600mm maximum centres and 100mm maximum from track ends with minimum 0.7 kN shear capacity.
11. The nominated lateral pressures and deflection limits must be checked for suitability for a specific project.
12. For BCA Building Importance Level 4, please contact Siniat.

Table 10 18mm Furring Channel Ceiling Span Table - REGION B

Refer to Section 2.3 for assistance determining the relevant wind pressures for a specific project.

18mm Furring Channel (AFC18) Ceiling Span Table	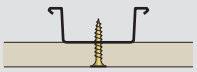	Up to BCA Building Importance Level 3	Ultimate pressure W_U (kPa)	0.71
			Serviceability pressure W_S (kPa)	0.3

Ceiling Lining	Furring Channel Spacing (mm)	Single Span		Double Span		3-or-more Spans	
		Span (mm)	Connection Demand (kN)	Spans (mm)	Connection Demand (kN)	Spans (mm)	Connection Demand (kN)
1 layer of 10mm	600	820	0.22	960	0.63	1020	0.61
	450	900	0.18	1110	0.55	1120	0.51
	400	940	0.16	1180	0.52	1160	0.47
	300	1030	0.14	1360	0.45	1280	0.38
2 layers of 10mm	600	770	0.23	910	0.67	950	0.64
	450	850	0.19	1050	0.58	1050	0.53
	400	880	0.17	1120	0.55	1090	0.49
	300	970	0.14	1290	0.47	1200	0.40
1 layer of 13mm	600	800	0.22	940	0.65	990	0.63
	450	880	0.18	1080	0.56	1080	0.51
	400	910	0.17	1150	0.53	1130	0.48
	300	1000	0.14	1330	0.46	1240	0.39
2 layers of 13mm	600	690	0.22	870	0.70	860	0.63
	450	760	0.18	1000	0.60	940	0.52
	400	790	0.17	1060	0.57	980	0.48
	300	870	0.14	1170	0.47	1080	0.40
3 layers of 13mm	600	610	0.22	810	0.74	760	0.64
	450	670	0.18	900	0.62	830	0.52
	400	700	0.17	940	0.57	870	0.48
	300	770	0.14	1030	0.47	950	0.40
1 layer of 16mm	600	790	0.22	930	0.65	980	0.63
	450	870	0.18	1080	0.57	1080	0.52
	400	910	0.17	1140	0.53	1120	0.48
	300	1000	0.14	1320	0.46	1240	0.40
2 layers of 16mm	600	680	0.22	860	0.70	840	0.63
	450	750	0.18	1000	0.61	930	0.52
	400	780	0.17	1050	0.57	960	0.48
	300	860	0.14	1150	0.47	1060	0.40
3 layers of 16mm	600	600	0.22	810	0.76	740	0.63
	450	660	0.18	890	0.62	820	0.52
	400	690	0.17	920	0.57	850	0.48
	300	760	0.14	1020	0.48	940	0.40

1. Table based upon downward (suction) and upward (uplift) pressures, intended for internal use only.
2. Table includes self weight and 2 kg/m² insulation weight with an additional 3 kg/m² service load. No further allowance for additional point loads or live loads.
3. Contact Siniat or a structural engineer to check ceiling for earthquake actions. Specific project information is required.
4. Table refers to Siniat Furring Channel of Base Metal Thickness (BMT) 0.42mm of grade G550 steel with Zincalume™ AM150 corrosion protection. Maximum production lengths available are 6.0m
5. Designed in accordance with *AS/NZS 4600:2018 Cold Formed Steel Structures* and *AS/NZS 2785:2020 Suspended Ceilings - Design and Installation.*
6. Wind pressures determined in accordance with *AS/NZS 1170.2 Wind Actions.*
7. Connections to clips must be checked with the *Clip Capacity Table.*
8. Ultimate Limit State Load Case 1: 1.2G + Wu (Suction) + $Q_{0.03kPa\ Service\ Load}$
   Ultimate Limit State Load Case 2: 0.9G + Wu (Uplift).
9. Serviceability Limit State Load Case 1: G, with deflection limited to Span/360. For gloss or brittle ceiling finishes contact Siniat for Span/500 deflection limit.
   Serviceability Limit State Load Case 2: Ws, with deflection limited to Span/200.
10. Perimeter anchors at 600mm maximum centres and 100mm maximum from track ends with minimum 0.7 kN shear capacity.
11. The nominated lateral pressures and deflection limits must be checked for suitability for a specific project.
12. For BCA Building Importance Level 4, please contact Siniat.

Table 11 Ceiling Clip Capacity - Direct Fix Ceiling Frames

Image	Name	Code	ULS Design Capacity (kN)
	Furring Channel A Clip 80mm drop (standard and wide version)	C26-80	1.23
		CW26-80	
	Furring Channel A Clip 180mm drop (standard and wide version)	C26-180	1.23
		CW26-180	
	Spring Adjustable Furring Channel A Clip	C52	1.23
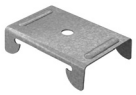	Furring Channel Anchor Clip (standard and wide versions)	C37-7H (7.5mm hole)	1.69
		CW37-7H (7.5mm hole)	
		C37-9H (9mm hole)	
		CW37-9H (9mm hole)	
	Furring Channel Anchor Clip M6 thread	C37-M6	1.69
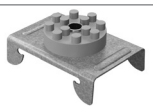	Furring Channel Resilient Mount 7.5mm hole	C001	1.69
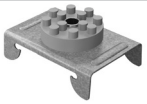	Furring Channel Resilient Mount M6 thread	C001M6	1.69
	Grip Clip	CGRIP	1.24 when fixed through hole closest to teeth
		CGRIP-9	
	Grip Clip Long	CGRIP-LONG	0.69 when fixed through hole closest to teeth
		CGRIP-LONG9	
	Furring Channel Screw Adjustable Mount	CFCSAM	1.69
	Purlin to Furring Channel Resilient Clip	C001-PC	1.69
	Furring Channel Adjustable Mount	CFCAM	0.79
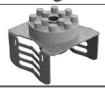	Furring Channel Resilient Adjustable Mount	CFCRESAM	0.79

1. Clip capacities are applicable to Siniat products only.
2. Clip capacities determined in accordance with *AS/NZS 4600:2018 Cold Formed Steel Structures*, Section 8.2.
3. Suitable for internal use only.

Fire Rated and Non-Fire Rated
Internal Suspended Ceiling Frames

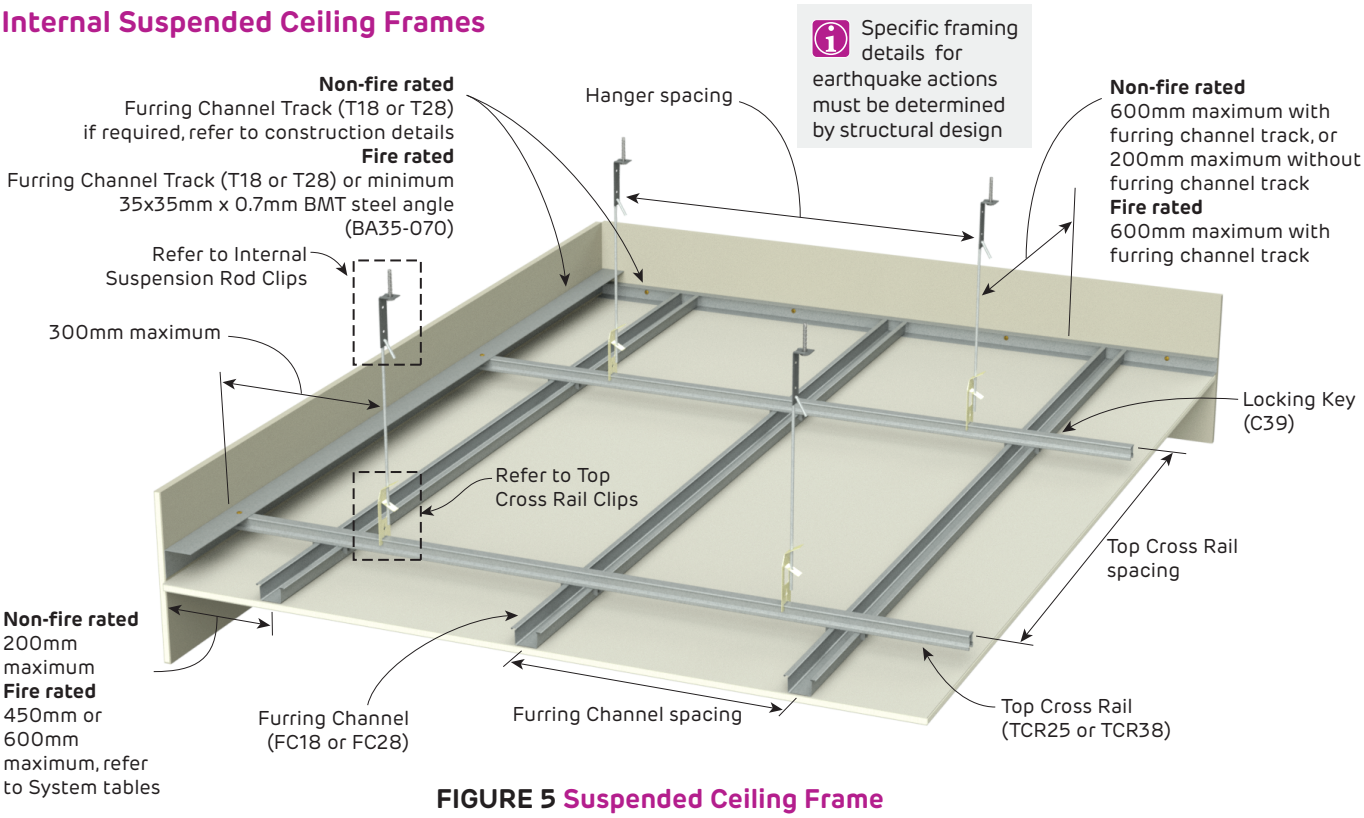

FIGURE 5 Suspended Ceiling Frame
Fire rated and Non-fire rated
Perspective

Fire Rated and Non-Fire Rated
Details for Single Span, Double Span or 3-or-More Span Ceilings

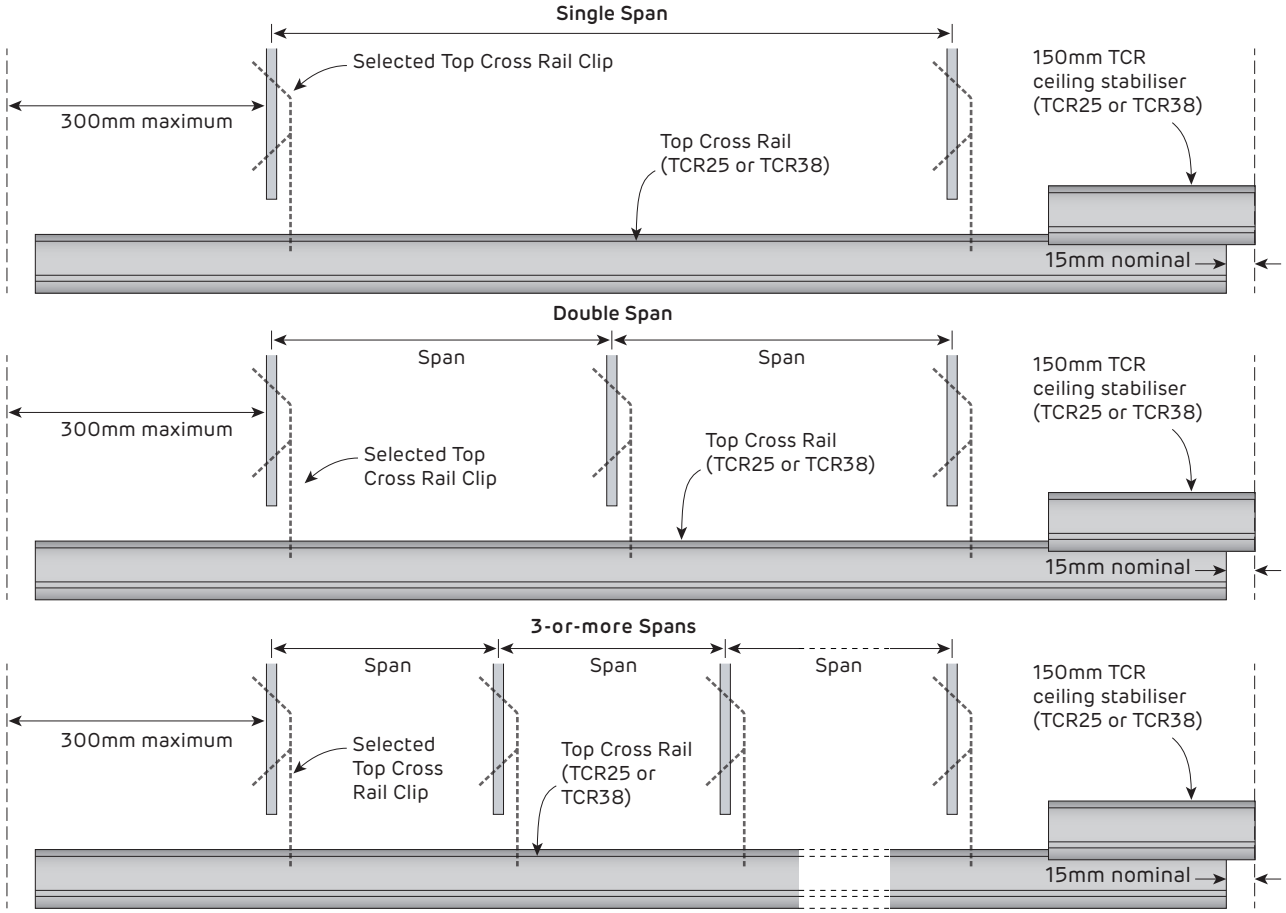

FIGURE 6 Top Cross Rail - Single, Double and 3-or-more Spans
Section

Table 12 25mm Top Cross Rail Ceiling Span Table - REGION A

Refer to Section 2.3 for assistance determining the relevant wind pressures for a specific project.

25mm Top Cross Rail Ceiling Span Table	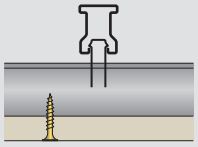	Up to BCA Building Importance Level 3	Ultimate pressure W_U (kPa)	0.39
			Serviceability pressure W_S (kPa)	0.25

Ceiling Lining	Furring Channel Spacing (mm)	Top Cross Rail Spacing (mm)	Single Span		Double Span		3-or-more Spans	
			Hanger Spacing (mm)	Hanger Demand (kN)	Hanger Spacing (mm)	Hanger Demand (kN)	Hanger Spacing (mm)	Hanger Demand (kN)
1 layer of 10mm	600	900	1220	0.47	1000	0.96	1080	0.95
		1050	1140	0.51	930	1.04	1000	1.02
		1200	1070	0.55	870	1.11	940	1.10
	450	900	1220	0.47	1070	1.03	1160	1.02
		1050	1140	0.51	990	1.11	1070	1.10
		1200	1070	0.55	930	1.19	1000	1.17
2 layers of 10mm	600	900	1070	0.48	920	1.04	1000	1.03
		1050	1020	0.54	860	1.13	930	1.12
		1200	970 FC28	0.58	800 FC28	1.21	860 FC28	1.18
	450	900	1070	0.48	990	1.12	1070	1.11
		1050	1020	0.54	910	1.20	990	1.19
		1200	970 FC28	0.58	850 FC28	1.28	920 FC28	1.27
1 layer of 13mm	600	900	1160	0.48	960	1.00	1040	0.99
		1050	1100	0.53	890	1.08	960	1.06
		1200	1030 FC28	0.57	830 FC28	1.15	900 FC28	1.14
	450	900	1160	0.48	1030	1.07	1110	1.05
		1050	1100	0.53	950	1.15	1030	1.14
		1200	1030	0.57	890	1.23	960	1.22
2 layers of 13mm	600	900	960	0.49	870	1.12	940	1.11
		1050	910 FC28	0.55	800 FC28	1.20	870 FC28	1.20
		1200	870 FC28	0.60	750 FC28	1.29	810 FC28	1.27
	450	900	960	0.49	920	1.18	1000	1.18
		1050	910	0.55	860	1.29	930	1.28
		1200	870 FC28	0.60	800 FC28	1.37	870 FC28	1.37
3 layers of 13mm	600	900	850 FC28	0.52	790 FC28	1.21	860 FC28	1.21
		1050	810 FC28	0.58	730 FC28	1.31	790 FC28	1.30
		1200	770 FC28	0.63	690 FC28	1.41	740 FC28	1.39
	450	750	910	0.47	930	1.19	1000	1.17
		900	850	0.52	850	1.31	910	1.28
		1050	810 FC28	0.58	780 FC28	1.40	850 FC28	1.39
1 layer of 16mm	600	900	1140	0.48	960	1.01	1040	1.00
		1050	1090	0.54	890	1.09	960	1.08
		1200	1020 FC28	0.57	830 FC28	1.17	900 FC28	1.16
	450	900	1140	0.48	1020	1.07	1110	1.07
		1050	1090	0.54	950	1.17	1020	1.15
		1200	1020	0.57	890	1.25	960	1.23
2 layers of 16mm	600	900	950	0.50	860	1.13	930	1.12
		1050	900 FC28	0.55	790 FC28	1.21	860 FC28	1.21
		1200	860 FC28	0.60	740 FC28	1.30	800 FC28	1.28
	450	900	950	0.50	910	1.20	990	1.19
		1050	900 FC28	0.55	850 FC28	1.31	920 FC28	1.29
		1200	860 FC28	0.60	790 FC28	1.39	860 FC28	1.38
3 layers of 16mm	600	900	840 FC28	0.53	780 FC28	1.23	840 FC28	1.21
		1050	800 FC28	0.59	720 FC28	1.33	780 FC28	1.31
		1200	760 FC28	0.64	680 FC28	1.43	730 FC28	1.41
	450	750	890	0.47	910	1.20	990	1.19
		900	840	0.53	830	1.31	900	1.30
		1050	800 FC28	0.59	770 FC28	1.42	840 FC28	1.42

'FC28' indicates only 28mm Furring Channel is suitable. When 'FC28' is not present in the table both 18mm and 28mm Furring Channels are suitable.

Concrete Soffit Anchor Table

Concrete Grade	Anchor
20 - 25 MPa	SA6x60
≥32MPa	SA6x45

1. No edge / spacing effects.

Internal Wind Load Calculator

1. Table based upon downward (suction) and upward (uplift) pressures, intended for internal use only. Down-struts are required for uplift.
2. Table includes self weight and 2 kg/m² insulation weight with an additional 3 kg/m² service load. No further allowance for additional point loads or live loads.
3. Contact Siniat or a structural engineer to check ceiling for earthquake actions. Specific project information is required.
4. Table refers to Siniat Furring Channels of 0.42mm Base Metal Thickness (BMT) of grade G550 steel and Siniat Top Cross Rails of 0.75mm BMT of grade G300, both with Zincalume™ AM150 corrosion protection. Maximum production lengths available are 6.0m
5. Furring Channels checked for 2-or-more spans only. If required, contact Siniat for Single Span furring channel check.
6. Designed in accordance with *AS/NZS 4600:2018 Cold Formed Steel Structures* and *AS/NZS 2785:2020 Suspended Ceilings - Design and Installation.*
7. Wind pressures determined in accordance with *AS/NZS 1170.2 Wind Actions.*
8. Connections to clips must be checked with the *Clip Capacity Table.*
9. Ultimate Limit State Load Case 1: 1.2G + Wu (Suction) + $Q_{0.03kPa\ Service\ Load}$
   Ultimate Limit State Load Case 2: 0.9G + Wu (Uplift).
10. Serviceability Limit State Load Case 1: G, with deflection limited to Span/360. For gloss or brittle ceiling finishes contact Siniat for Span/500 deflection limit. Serviceability Limit State Load Case 2: Ws, with deflection limited to Span/200.
11. Perimeter anchors at 600mm maximum centres and 100mm maximum from track ends with minimum 0.7 kN shear capacity.
12. The nominated lateral pressures and deflection limits must be checked for suitability for a specific project.
13. For BCA Building Importance Level 4, please contact Siniat.

Table 13 25mm Top Cross Rail Ceiling Span Table - REGION B

Refer to Section 2.3 for assistance determining the relevant wind pressures for a specific project.

25mm Top Cross Rail Ceiling Span Table	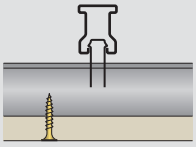	Up to BCA Building Importance Level 3	Ultimate pressure W_U (kPa)	0.59
			Serviceability pressure W_S (kPa)	0.25

Ceiling Lining	Furring Channel Spacing (mm)	Top Cross Rail Spacing (mm)	Single Span		Double Span		3-or-more Spans	
			Hanger Spacing (mm)	Hanger Demand (kN)	Hanger Spacing (mm)	Hanger Demand (kN)	Hanger Spacing (mm)	Hanger Demand (kN)
1 layer of 10mm	600	900	1070	0.56	860	1.12	930	1.10
		1050	990 FC28	0.60	800 FC28	1.21	860 FC28	1.19
		1200	920 FC28	0.64	750 FC28	1.30	810 FC28	1.28
	450	900	1070	0.56	920	1.19	1000	1.19
		1050	990	0.60	850	1.29	920	1.27
		1200	920	0.64	800	1.38	860	1.36
2 layers of 10mm	600	900	1000	0.59	810	1.19	880	1.18
		1050	930 FC28	0.64	750 FC28	1.28	810 FC28	1.27
		1200	870 FC28	0.68	700 FC28	1.37	760 FC28	1.36
	450	900	1000	0.59	870	1.28	940	1.26
		1050	930	0.64	800	1.37	870	1.36
		1200	870 FC28	0.68	750 FC28	1.47	810 FC28	1.45
1 layer of 13mm	600	750	1130	0.52	920	1.06	990	1.04
		900	1030	0.57	840	1.16	910	1.15
		1050	960 FC28	0.62	770 FC28	1.24	840 FC28	1.23
	450	900	1030	0.57	890	1.22	970	1.22
		1050	960	0.62	830	1.33	890	1.31
		1200	900 FC28	0.66	770 FC28	1.41	840 FC28	1.41
2 layers of 13mm	600	750	1020	0.55	840	1.14	910	1.13
		900	950	0.62	770	1.25	830	1.23
		1050	880 FC28	0.67	710 FC28	1.35	770 FC28	1.34
	450	750	1020	0.55	900	1.22	970	1.20
		900	950	0.62	820	1.33	890	1.32
		1050	880	0.67	760	1.44	820	1.42
3 layers of 13mm	600	750	910	0.57	790	1.23	850	1.21
		900	850 FC28	0.64	720 FC28	1.35	770 FC28	1.32
		1050	810 FC28	0.71	660 FC28	1.44	720 FC28	1.44
	450	750	910	0.57	840	1.31	910	1.30
		900	850	0.64	770	1.44	830	1.42
		1050	810 FC28	0.71	710 FC28	1.55	770 FC28	1.54
1 layer of 16mm	600	750	1120	0.52	910	1.05	990	1.05
		900	1030	0.57	830	1.15	900	1.14
		1050	950 FC28	0.62	770 FC28	1.25	830 FC28	1.23
	450	900	1030	0.57	890	1.24	960	1.22
		1050	950	0.62	820	1.33	890	1.32
		1200	890 FC28	0.66	770 FC28	1.43	830 FC28	1.41
2 layers of 16mm	600	750	1010	0.56	840	1.16	900	1.13
		900	940	0.62	760	1.26	830	1.26
		1050	870 FC28	0.67	710 FC28	1.37	760 FC28	1.34
	450	750	1010	0.56	890	1.23	970	1.22
		900	940	0.62	820	1.36	880	1.33
		1050	870 FC28	0.67	750 FC28	1.45	820 FC28	1.45
3 layers of 16mm	600	750	890	0.57	780	1.25	840	1.23
		900	840 FC28	0.64	710 FC28	1.36	770 FC28	1.35
		1050	800 FC28	0.72	660 FC28	1.48	710 FC28	1.45
	450	750	890	0.57	830	1.33	900	1.31
		900	840	0.64	760	1.46	820	1.44
		1050	800 FC28	0.72	700 FC28	1.57	760 FC28	1.55

'FC28' indicates only 28mm Furring Channel is suitable. When 'FC28' is not present in the table both 18mm and 28mm Furring Channels are suitable.

Concrete Soffit Anchor Table

Concrete Grade	Anchor
20 - 25 MPa	SA6x60
≥32MPa	SA6x45

1. No edge / spacing effects.

1. Table based upon downward (suction) and upward (uplift) pressures, intended for internal use only. Down-struts are required for uplift.
2. Table includes self weight and 2 kg/m² insulation weight with an additional 3 kg/m² service load. No further allowance for additional point loads or live loads.
3. Contact Siniat or a structural engineer to check ceiling for earthquake actions. Specific project information is required.
4. Table refers to Siniat Furring Channels of 0.42mm Base Metal Thickness (BMT) of grade G550 steel and Siniat Top Cross Rails of 0.75mm BMT of grade G300, both with Zincalume™ AM150 corrosion protection. Maximum production lengths available are 6.0m
5. Furring Channels checked for 2-or-more spans only. If required, contact Siniat for Single Span furring channel check.
6. Designed in accordance with *AS/NZS 4600:2018 Cold Formed Steel Structures* and *AS/NZS 2785:2020 Suspended Ceilings - Design and Installation.*
7. Wind pressures determined in accordance with *AS/NZS 1170.2 Wind Actions.*
8. Connections to clips must be checked with the *Clip Capacity Table.*
9. Ultimate Limit State Load Case 1: 1.2G + Wu (Suction) + $Q_{0.03kPa\ Service\ Load}$
   Ultimate Limit State Load Case 2: 0.9G + Wu (Uplift).
10. Serviceability Limit State Load Case 1: G, with deflection limited to Span/360. For gloss or brittle ceiling finishes contact Siniat for Span/500 deflection limit. Serviceability Limit State Load Case 2: Ws, with deflection limited to Span/200.
11. Perimeter anchors at 600mm maximum centres and 100mm maximum from track ends with minimum 0.7 kN shear capacity.
12. The nominated lateral pressures and deflection limits must be checked for suitability for a specific project.
13. For BCA Building Importance Level 4, please contact Siniat.

Table 14 38mm Top Cross Rail Ceiling Span Table - REGION A

Refer to Section 2.3 for assistance determining the relevant wind pressures for a specific project.

38mm Top Cross Rail Ceiling Span Table	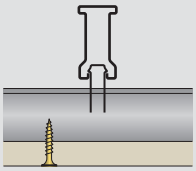	Up to BCA Building Importance Level 3	Ultimate pressure W_U (kPa)	0.39
			Serviceability pressure W_S (kPa)	0.25

Ceiling Lining	Furring Channel Spacing (mm)	Top Cross Rail Spacing (mm)	Single Span		Double Span		3-or-more Spans	
			Hanger Spacing (mm)	Hanger Demand (kN)	Hanger Spacing (mm)	Hanger Demand (kN)	Hanger Spacing (mm)	Hanger Demand (kN)
1 layer of 10mm	600	900	1580	0.61	1180	1.14	1280	1.14
		1050	1480	0.67	1090	1.23	1180	1.22
		1200	1400	0.72	1020	1.32	1110	1.31
	450	1050	1480	0.67	1180	1.34	1270	1.31
		1200	1400	0.72	1100	1.42	1190	1.41
		1350	1340 FC28	0.78	1040 FC28	1.51	1120 FC28	1.49
2 layers of 10mm	600	900	1480	0.67	1090	1.24	1180	1.23
		1050	1390	0.74	1010	1.34	1090	1.33
		1200	1310 FC28	0.80	940 FC28	1.43	1020 FC28	1.42
	450	900	1480	0.67	1170	1.33	1270	1.32
		1050	1390	0.74	1090	1.45	1180	1.44
		1200	1310 FC28	0.80	1020 FC28	1.55	1100 FC28	1.53
1 layer of 13mm	600	900	1530	0.64	1140	1.20	1230	1.18
		1050	1440	0.70	1050	1.28	1140	1.28
		1200	1360 FC28	0.76	980 FC28	1.37	1060 FC28	1.36
	450	1050	1440	0.70	1130	1.38	1230	1.38
		1200	1360	0.76	1060	1.48	1150	1.47
		1350	1300 FC28	0.82	1000 FC28	1.57	1080 FC28	1.55
2 layers of 13mm	600	900	1370	0.71	1020	1.32	1100	1.31
		1050	1300 FC28	0.79	950 FC28	1.44	1020 FC28	1.41
		1200	1240 FC28	0.86	880 FC28	1.52	960 FC28	1.52
	450	900	1370	0.71	1100	1.43	1190	1.41
		1050	1300	0.79	1020	1.54	1100	1.52
		1200	1240 FC28	0.86	950 FC28	1.64	1030 FC28	1.63
3 layers of 13mm	600	900	1210 FC28	0.75	940 FC28	1.45	1010 FC28	1.43
		1050	1150 FC28	0.83	870 FC28	1.57	940 FC28	1.55
		1200	1100 FC28	0.91	800 FC28	1.65	870 FC28	1.64
	450	900	1210	0.75	1010	1.56	1090	1.54
		1050	1150 FC28	0.83	930 FC28	1.68	1010 FC28	1.67
		1200	1100 FC28	0.91	850 FC28	1.75	930 FC28	1.75
1 layer of 16mm	600	900	1520	0.65	1130	1.20	1220	1.19
		1050	1430	0.71	1040	1.29	1130	1.28
		1200	1350 FC28	0.77	980 FC28	1.39	1060 FC28	1.37
	450	1050	1430	0.71	1130	1.40	1220	1.38
		1200	1350	0.77	1050	1.49	1140	1.48
		1350	1290 FC28	0.82	990 FC28	1.58	1070 FC28	1.56
2 layers of 16mm	600	900	1350	0.72	1010	1.34	1090	1.32
		1050	1280 FC28	0.79	930 FC28	1.44	1010 FC28	1.43
		1200	1220 FC28	0.86	870 FC28	1.54	950 FC28	1.54
	450	900	1350	0.72	1090	1.45	1180	1.43
		1050	1280 FC28	0.79	1010 FC28	1.56	1090 FC28	1.54
		1200	1220 FC28	0.86	940 FC28	1.66	1020 FC28	1.65
3 layers of 16mm	600	900	1190 FC28	0.76	920 FC28	1.46	1000 FC28	1.45
		1050	1130 FC28	0.84	850 FC28	1.58	920 FC28	1.56
		1200	1080 FC28	0.92	800 FC28	1.70	860 FC28	1.67
	450	900	1190	0.76	990	1.57	1070	1.56
		1050	1130 FC28	0.84	920 FC28	1.71	990 FC28	1.68
		1200	1080 FC28	0.92	830 FC28	1.76	900 FC28	1.74

'FC28' indicates only 28mm Furring Channel is suitable. When 'FC28' is not present in the table both 18mm and 28mm Furring Channels are suitable.

Concrete Soffit Anchor Table

Concrete Grade	Anchor
20 - 25 MPa	SA6x60
≥32MPa	SA6x45

1. No edge / spacing effects.

1. Table based upon downward (suction) and upward (uplift) pressures, intended for internal use only. Down-struts are required for uplift.
2. Table includes self weight and 2 kg/m² insulation weight with an additional 3 kg/m² service load. No further allowance for additional point loads or live loads.
3. Contact Siniat or a structural engineer to check ceiling for earthquake actions. Specific project information is required.
4. Table refers to Siniat Furring Channels of 0.42mm Base Metal Thickness (BMT) of grade G550 steel and Siniat Top Cross Rails of 0.75mm BMT of grade G300, both with Zincalume™ AM150 corrosion protection. Maximum production lengths available are 6.0m
5. Furring Channels checked for 2-or-more spans only. If required, contact Siniat for Single Span furring channel check.
6. Designed in accordance with *AS/NZS 4600:2018 Cold Formed Steel Structures* and *AS/NZS 2785:2020 Suspended Ceilings - Design and Installation.*
7. Wind pressures determined in accordance with *AS/NZS 1170.2 Wind Actions.*
8. Connections to clips must be checked with the *Clip Capacity Table.*
9. Ultimate Limit State Load Case 1: 1.2G + Wu (Suction) + $Q_{0.03kPa\ Service\ Load}$
   Ultimate Limit State Load Case 2: 0.9G + Wu (Uplift).
10. Serviceability Limit State Load Case 1: G, with deflection limited to Span/360. For gloss or brittle ceiling finishes contact Siniat for Span/500 deflection limit. Serviceability Limit State Load Case 2: Ws, with deflection limited to Span/200.
11. Perimeter anchors at 600mm maximum centres and 100mm maximum from track ends with minimum 0.7 kN shear capacity.
12. The nominated lateral pressures and deflection limits must be checked for suitability for a specific project.
13. For BCA Building Importance Level 4, please contact Siniat.

Table 15 38mm Top Cross Rail Ceiling Span Table - REGION A

Refer to Section 2.3 for assistance determining the relevant wind pressures for a specific project.

38mm Top Cross Rail Ceiling Span Table	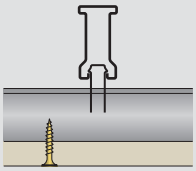	Up to BCA Building Importance Level 3	Ultimate pressure W_U (kPa)	0.46
			Serviceability pressure W_S (kPa)	0.3

Ceiling Lining	Furring Channel Spacing (mm)	Top Cross Rail Spacing (mm)	Single Span		Double Span		3-or-more Spans	
			Hanger Spacing (mm)	Hanger Demand (kN)	Hanger Spacing (mm)	Hanger Demand (kN)	Hanger Spacing (mm)	Hanger Demand (kN)
1 layer of 10mm	600	900	1500	0.65	1120	1.22	1210	1.20
		1050	1420	0.72	1030	1.31	1120	1.30
		1200	1340 FC28	0.78	970 FC28	1.41	1040 FC28	1.38
	450	1050	1420	0.72	1110	1.41	1200	1.39
		1200	1340	0.78	1040	1.51	1130	1.50
		1350	1270 FC28	0.83	980 FC28	1.60	1060 FC28	1.58
2 layers of 10mm	600	900	1420	0.71	1040	1.31	1120	1.29
		1050	1330	0.78	960	1.41	1040	1.40
		1200	1260 FC28	0.85	900 FC28	1.51	970 FC28	1.49
	450	900	1420	0.71	1120	1.41	1210	1.39
		1050	1330	0.78	1030	1.51	1120	1.50
		1200	1260 FC28	0.85	970 FC28	1.63	1050 FC28	1.61
1 layer of 13mm	600	900	1460	0.68	1080	1.26	1160	1.24
		1050	1370	0.75	1000	1.36	1080	1.34
		1200	1300 FC28	0.81	930 FC28	1.45	1010 FC28	1.44
	450	900	1460	0.68	1160	1.35	1250	1.33
		1050	1370	0.75	1070	1.46	1160	1.44
		1200	1300	0.81	1000	1.56	1090	1.55
2 layers of 13mm	600	900	1350	0.76	980	1.39	1060	1.37
		1050	1270 FC28	0.84	900 FC28	1.49	980 FC28	1.48
		1200	1200 FC28	0.91	850 FC28	1.60	910 FC28	1.57
	450	900	1350	0.76	1050	1.49	1140	1.48
		1050	1270	0.84	970	1.60	1050	1.59
		1200	1200 FC28	0.91	910 FC28	1.72	990 FC28	1.71
3 layers of 13mm	600	900	1210 FC28	0.81	900 FC28	1.50	970 FC28	1.48
		1050	1150 FC28	0.89	830 FC28	1.61	900 FC28	1.60
		1200	1100 FC28	0.98	780 FC28	1.73	840 FC28	1.71
	450	750	1290	0.72	1060	1.47	1150	1.46
		900	1210	0.81	970	1.62	1050	1.60
		1050	1150 FC28	0.89	900 FC28	1.75	970 FC28	1.72
1 layer of 16mm	600	900	1460	0.69	1070	1.26	1160	1.25
		1050	1370	0.76	990	1.36	1070	1.35
		1200	1300 FC28	0.82	930 FC28	1.46	1000 FC28	1.44
	450	900	1460	0.69	1150	1.36	1250	1.35
		1050	1370	0.76	1070	1.47	1150	1.45
		1200	1300	0.82	1000	1.58	1080	1.56
2 layers of 16mm	600	900	1340	0.77	970	1.40	1050	1.39
		1050	1260 FC28	0.85	900 FC28	1.52	970 FC28	1.49
		1200	1190 FC28	0.92	840 FC28	1.62	900 FC28	1.59
	450	900	1340	0.77	1040	1.50	1130	1.49
		1050	1260 FC28	0.85	970 FC28	1.63	1040 FC28	1.60
		1200	1190 FC28	0.92	900 FC28	1.73	980 FC28	1.73
3 layers of 16mm	600	900	1190 FC28	0.81	890 FC28	1.52	960 FC28	1.50
		1050	1130 FC28	0.90	820 FC28	1.63	890 FC28	1.62
		1200	1080 FC28	0.98	770 FC28	1.75	830 FC28	1.73
	450	750	1270	0.72	1050	1.49	1140	1.48
		900	1190	0.81	960	1.64	1040	1.62
		1050	1130 FC28	0.90	880 FC28	1.75	960 FC28	1.75

'FC28' indicates only 28mm Furring Channel is suitable. When 'FC28' is not present in the table both 18mm and 28mm Furring Channels are suitable.

Concrete Soffit Anchor Table

Concrete Grade	Anchor
20 - 25 MPa	SA6x60
≥32MPa	SA6x45

1. No edge / spacing effects.

1. Table based upon downward (suction) and upward (uplift) pressures, intended for internal use only. Down-struts are required for uplift.
2. Table includes self weight and 2 kg/m² insulation weight with an additional 3 kg/m² service load. No further allowance for additional point loads or live loads.
3. Contact Siniat or a structural engineer to check ceiling for earthquake actions. Specific project information is required.
4. Table refers to Siniat Furring Channels of 0.42mm Base Metal Thickness (BMT) of grade G550 steel and Siniat Top Cross Rails of 0.75mm BMT of grade G300, both with Zincalume™ AM150 corrosion protection. Maximum production lengths available are 6.0m
5. Furring Channels checked for 2-or-more spans only. If required, contact Siniat for Single Span furring channel check.
6. Designed in accordance with *AS/NZS 4600:2018 Cold Formed Steel Structures* and *AS/NZS 2785:2020 Suspended Ceilings - Design and Installation.*
7. Wind pressures determined in accordance with *AS/NZS 1170.2 Wind Actions.*
8. Connections to clips must be checked with the *Clip Capacity Table.*
9. Ultimate Limit State Load Case 1: 1.2G + Wu (Suction) + $Q_{0.03kPa\ Service\ Load}$
   Ultimate Limit State Load Case 2: 0.9G + Wu (Uplift).
10. Serviceability Limit State Load Case 1: G, with deflection limited to Span/360. For gloss or brittle ceiling finishes contact Siniat for Span/500 deflection limit. Serviceability Limit State Load Case 2: Ws, with deflection limited to Span/200.
11. Perimeter anchors at 600mm maximum centres and 100mm maximum from track ends with minimum 0.7 kN shear capacity.
12. The nominated lateral pressures and deflection limits must be checked for suitability for a specific project.
13. For BCA Building Importance Level 4, please contact Siniat.

Table 16 38mm Top Cross Rail Ceiling Span Table - REGION B

Refer to Section 2.3 for assistance determining the relevant wind pressures for a specific project.

38mm Top Cross Rail Ceiling Span Table	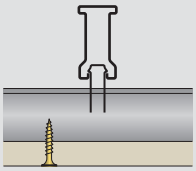	Up to BCA Building Importance Level 3	Ultimate pressure W_U (kPa)	0.59
			Serviceability pressure W_S (kPa)	0.25

Ceiling Lining	Furring Channel Spacing (mm)	Top Cross Rail Spacing (mm)	Single Span		Double Span		3-or-more Spans	
			Hanger Spacing (mm)	Hanger Demand (kN)	Hanger Spacing (mm)	Hanger Demand (kN)	Hanger Spacing (mm)	Hanger Demand (kN)
1 layer of 10mm	600	900	1400	0.73	1020	1.33	1100	1.32
		1050	1310 FC28	0.80	940 FC28	1.43	1020 FC28	1.42
		1200	1240 FC28	0.86	880 FC28	1.53	950 FC28	1.51
	450	1050	1310	0.80	1010	1.54	1100	1.53
		1200	1240 FC28	0.86	950 FC28	1.66	1030 FC28	1.64
		1350	1180 FC28	0.93	890 FC28	1.75	970 FC28	1.74
2 layers of 10mm	600	900	1330	0.79	960	1.42	1030	1.39
		1050	1240 FC28	0.86	890 FC28	1.53	960 FC28	1.51
		1200	1170 FC28	0.92	830 FC28	1.64	900 FC28	1.62
	450	900	1330	0.79	1030	1.52	1110	1.50
		1050	1240	0.86	950	1.64	1030	1.62
		1200	1170 FC28	0.92	890 FC28	1.75	960 FC28	1.73
1 layer of 13mm	600	900	1360	0.75	990	1.37	1070	1.36
		1050	1280 FC28	0.83	910 FC28	1.47	990 FC28	1.46
		1200	1210 FC28	0.89	860 FC28	1.59	920 FC28	1.56
	450	900	1360	0.75	1060	1.47	1150	1.46
		1050	1280	0.83	990	1.60	1070	1.58
		1200	1210 FC28	0.89	920 FC28	1.70	1000 FC28	1.69
2 layers of 13mm	600	900	1270	0.83	910	1.49	980	1.47
		1050	1190 FC28	0.91	840 FC28	1.60	900 FC28	1.57
		1200	1120 FC28	0.98	790 FC28	1.72	850 FC28	1.69
	450	900	1270	0.83	980	1.60	1060	1.59
		1050	1190	0.91	910	1.74	980	1.71
		1200	1120 FC28	0.98	800 FC28	1.74	880 FC28	1.75
3 layers of 13mm	600	750	1290	0.81	930	1.46	1000	1.44
		900	1200 FC28	0.90	850 FC28	1.60	920 FC28	1.59
		1050	1120 FC28	0.99	780 FC28	1.71	850 FC28	1.71
	450	750	1290	0.81	1000	1.57	1080	1.55
		900	1200	0.90	910	1.71	990	1.71
		1050	1120 FC28	0.99	800 FC28	1.76	870 FC28	1.75
1 layer of 16mm	600	900	1360	0.76	980	1.37	1060	1.36
		1050	1270 FC28	0.83	910 FC28	1.49	980 FC28	1.46
		1200	1200 FC28	0.90	850 FC28	1.59	920 FC28	1.57
	450	900	1360	0.76	1060	1.48	1150	1.47
		1050	1270	0.83	980	1.60	1060	1.58
		1200	1200 FC28	0.90	920 FC28	1.72	990 FC28	1.69
2 layers of 16mm	600	900	1260	0.84	900	1.50	970	1.48
		1050	1180 FC28	0.92	830 FC28	1.61	900 FC28	1.60
		1200	1110 FC28	0.99	780 FC28	1.73	840 FC28	1.70
	450	900	1260	0.84	970	1.61	1050	1.60
		1050	1180 FC28	0.92	900 FC28	1.75	970 FC28	1.72
		1200	1110 FC28	0.99	790 FC28	1.75	860 FC28	1.74
3 layers of 16mm	600	750	1270	0.82	920	1.48	990	1.45
		900	1190 FC28	0.92	840 FC28	1.62	900 FC28	1.59
		1050	1110 FC28	1.00	770 FC28	1.73	840 FC28	1.73
	450	750	1270	0.82	990	1.59	1070	1.57
		900	1190	0.92	900	1.73	980	1.73
		1050	1110 FC28	1.00	780 FC28	1.75	850 FC28	1.75

'FC28' indicates only 28mm Furring Channel is suitable. When 'FC28' is not present in the table both 18mm and 28mm Furring Channels are suitable.

Concrete Soffit Anchor Table

Concrete Grade	Anchor
20 - 25 MPa	SA6x60
≥32MPa	SA6x45

1. No edge / spacing effects.

1. Table based upon downward (suction) and upward (uplift) pressures, intended for internal use only. Down-struts are required for uplift.
2. Table includes self weight and 2 kg/m² insulation weight with an additional 3 kg/m² service load. No further allowance for additional point loads or live loads.
3. Contact Siniat or a structural engineer to check ceiling for earthquake actions. Specific project information is required.
4. Table refers to Siniat Furring Channels of 0.42mm Base Metal Thickness (BMT) of grade G550 steel and Siniat Top Cross Rails of 0.75mm BMT of grade G300, both with Zincalume™ AM150 corrosion protection. Maximum production lengths available are 6.0m
5. Furring Channels checked for 2-or-more spans only. If required, contact Siniat for Single Span furring channel check.
6. Designed in accordance with *AS/NZS 4600:2018 Cold Formed Steel Structures* and *AS/NZS 2785:2020 Suspended Ceilings - Design and Installation.*
7. Wind pressures determined in accordance with *AS/NZS 1170.2 Wind Actions.*
8. Connections to clips must be checked with the *Clip Capacity Table.*
9. Ultimate Limit State Load Case 1: 1.2G + Wu (Suction) + $Q_{0.03kPa\ Service\ Load}$
   Ultimate Limit State Load Case 2: 0.9G + Wu (Uplift).
10. Serviceability Limit State Load Case 1: G, with deflection limited to Span/360. For gloss or brittle ceiling finishes contact Siniat for Span/500 deflection limit. Serviceability Limit State Load Case 2: Ws, with deflection limited to Span/200.
11. Perimeter anchors at 600mm maximum centres and 100mm maximum from track ends with minimum 0.7 kN shear capacity.
12. The nominated lateral pressures and deflection limits must be checked for suitability for a specific project.
13. For BCA Building Importance Level 4, please contact Siniat.

Table 17 38mm Top Cross Rail Ceiling Span Table - REGION B

Refer to Section 2.3 for assistance determining the relevant wind pressures for a specific project.

38mm Top Cross Rail Ceiling Span Table	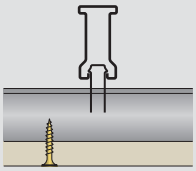	Up to BCA Building Importance Level 3	Ultimate pressure W_U (kPa)	0.71
			Serviceability pressure W_S (kPa)	0.3

Ceiling Lining	Furring Channel Spacing (mm)	Top Cross Rail Spacing (mm)	Single Span		Double Span		3-or-more Spans	
			Hanger Spacing (mm)	Hanger Demand (kN)	Hanger Spacing (mm)	Hanger Demand (kN)	Hanger Spacing (mm)	Hanger Demand (kN)
1 layer of 10mm	600	900	1320	0.80	950	1.43	1020	1.41
		1050	1230 FC28	0.87	880 FC28	1.55	950 FC28	1.53
		1200	1160 FC28	0.93	820 FC28	1.65	890 FC28	1.64
	450	900	1320	0.80	1020	1.54	1100	1.52
		1050	1230	0.87	940	1.66	1020	1.64
		1200	1160 FC28	0.93	870 FC28	1.75	950 FC28	1.75
2 layers of 10mm	600	900	1260	0.85	900	1.51	970	1.49
		1050	1180 FC28	0.93	830 FC28	1.63	900 FC28	1.61
		1200	1110 FC28	0.99	780 FC28	1.75	840 FC28	1.72
	450	900	1260	0.85	970	1.63	1050	1.61
		1050	1180	0.93	890	1.74	970	1.74
		1200	1110 FC28	0.99	780 FC28	1.75	850 FC28	1.74
1 layer of 13mm	600	900	1290	0.82	920	1.46	1000	1.45
		1050	1200 FC28	0.89	850 FC28	1.58	920 FC28	1.56
		1200	1140 FC28	0.97	800 FC28	1.69	860 FC28	1.67
	450	900	1290	0.82	990	1.57	1070	1.55
		1050	1200	0.89	920	1.71	990	1.68
		1200	1140 FC28	0.97	830 FC28	1.76	900 FC28	1.74
2 layers of 13mm	600	750	1310	0.80	940	1.44	1020	1.43
		900	1210 FC28	0.89	860 FC28	1.58	930 FC28	1.56
		1050	1130 FC28	0.97	790 FC28	1.69	860 FC28	1.69
	450	750	1310	0.80	1010	1.55	1090	1.53
		900	1210	0.89	920	1.69	1000	1.68
		1050	1130 FC28	0.97	820 FC28	1.76	890 FC28	1.75
3 layers of 13mm	600	750	1240	0.86	880	1.53	950	1.51
		900	1140 FC28	0.95	800 FC28	1.67	870 FC28	1.66
		1050	1070 FC28	1.04	720 FC28	1.75	790 FC28	1.76
	450	750	1240	0.86	950	1.65	1030	1.64
		900	1140	0.95	840	1.75	920	1.76
		1050	1070 FC28	1.04	720 FC28	1.75	790 FC28	1.76
1 layer of 16mm	600	900	1280	0.82	920	1.47	990	1.45
		1050	1200 FC28	0.90	850 FC28	1.59	920 FC28	1.57
		1200	1130 FC28	0.97	790 FC28	1.69	860 FC28	1.68
	450	900	1280	0.82	990	1.59	1070	1.57
		1050	1200	0.90	920	1.72	990	1.69
		1200	1130 FC28	0.97	820 FC28	1.75	900 FC28	1.76
2 layers of 16mm	600	750	1300	0.81	930	1.45	1010	1.44
		900	1200 FC28	0.90	850 FC28	1.59	920 FC28	1.57
		1050	1120 FC28	0.98	790 FC28	1.72	850 FC28	1.69
	450	750	1300	0.81	1000	1.56	1090	1.55
		900	1200	0.90	920	1.72	990	1.69
		1050	1120 FC28	0.98	800 FC28	1.74	880 FC28	1.75
3 layers of 16mm	600	750	1230	0.87	870	1.54	940	1.53
		900	1130 FC28	0.96	800 FC28	1.70	860 FC28	1.67
		1050	1060 FC28	1.05	700 FC28	1.74	770 FC28	1.75
	450	750	1230	0.87	940	1.67	1020	1.66
		900	1130	0.96	820	1.75	900	1.75
		1050	1060 FC28	1.05	700 FC28	1.74	770 FC28	1.75

'FC28' indicates only 28mm Furring Channel is suitable. When 'FC28' is not present in the table both 18mm and 28mm Furring Channels are suitable.

Concrete Soffit Anchor Table

Concrete Grade	Anchor
20 - 25 MPa	SA6x60
≥32MPa	SA6x45

1. No edge / spacing effects.

1. Table based upon downward (suction) and upward (uplift) pressures, intended for internal use only. Down-struts are required for uplift.
2. Table includes self weight and 2 kg/m² insulation weight with an additional 3 kg/m² service load. No further allowance for additional point loads or live loads.
3. Contact Siniat or a structural engineer to check ceiling for earthquake actions. Specific project information is required.
4. Table refers to Siniat Furring Channels of 0.42mm Base Metal Thickness (BMT) of grade G550 steel and Siniat Top Cross Rails of 0.75mm BMT of grade G300, both with Zincalume™ AM150 corrosion protection. Maximum production lengths available are 6.0m
5. Furring Channels checked for 2-or-more spans only. If required, contact Siniat for Single Span furring channel check.
6. Designed in accordance with *AS/NZS 4600:2018 Cold Formed Steel Structures* and *AS/NZS 2785:2020 Suspended Ceilings - Design and Installation.*
7. Wind pressures determined in accordance with *AS/NZS 1170.2 Wind Actions.*
8. Connections to clips must be checked with the *Clip Capacity Table.*
9. Ultimate Limit State Load Case 1: 1.2G + Wu (Suction) + $Q_{0.03kPa\ Service\ Load}$
   Ultimate Limit State Load Case 2: 0.9G + Wu (Uplift).
10. Serviceability Limit State Load Case 1: G, with deflection limited to Span/360. For gloss or brittle ceiling finishes contact Siniat for Span/500 deflection limit. Serviceability Limit State Load Case 2: Ws, with deflection limited to Span/200.
11. Perimeter anchors at 600mm maximum centres and 100mm maximum from track ends with minimum 0.7 kN shear capacity.
12. The nominated lateral pressures and deflection limits must be checked for suitability for a specific project.
13. For BCA Building Importance Level 4, please contact Siniat.

Table 18 Ceiling Clip Capacity - Suspended Ceiling Frames

Image	Name	Code	ULS Design Capacity (kN)
	Spring Adjustable Purlin to Suspension Rod Clip	C60DF	1.80
	Spring Adjustable Anchor to Suspension Rod Clip	C60LDF (6.5mm diameter hole)	1.80
	Suspension Rod Flat Bracket	C74	1.06
	Suspension Rod Multi-purpose Bracket	C47-74 (6mm diameter hole)	1.06
		C47-749 (9mm diameter hole)	
	Spring Adjustable Suspension Rod to Top Cross Rail Clip	C60	1.80
	Anchor to Top Cross Rail Clip	C24	1.80
	Top Cross Rail to Purlin Clip	C66	1.80
	Spring Adjustable Side Mounted Top Cross Rail Clip	C61S	1.31

1. Clip capacities are applicable to Siniat products only.
2. Clip capacities determined in accordance with *AS/NZS 4600:2018 Cold Formed Steel Structures*, Section 8.2.
3. Suitable for internal use only.

Table 19 Ceiling Clip Capacity - Suspended Ceiling Frames

Image	Name	Code	ULS Design Capacity (kN)
	Spring Adjustable Suspension Rod Joiner	C54	1.80
	Adjustable Anchor to Top Cross Rail Clip 100mm drop 200mm drop 300mm drop	CTCR-100 CTCR-200 CTCR-300	1.70
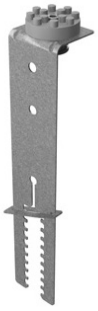	Adjustable Anchor to Top Cross Rail Resilient Clip 100mm drop 200mm drop 300mm drop	CTCRRES-100 CTCRRES-200 CTCRRES-300	1.70
	Top Cross Rail to Furring Channel Locking Key (clik clak) (standard and wide version)	C39 CW39	1.26
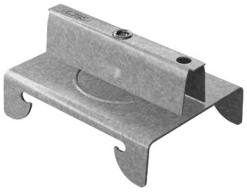	Top Cross Rail to Furring Channel Swivel Clip	C79S	1.32
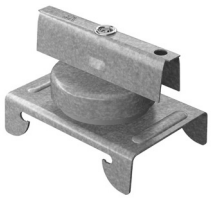	Top Cross Rail to Furring Channel Resilient Swivel Clip	C79SRES	1.32
	Clip Isolation Hanger	CRAIH-05	1.06

1. Clip capacities are applicable to Siniat products only.
2. Clip capacities determined in accordance with *AS/NZS 4600:2018 Cold Formed Steel Structures*, Section 8.2.
3. Suitable for internal use only.

Worked Example

Internal suspended ceiling lined with plasterboard

- Internal suspended top cross rail and furring channel ceiling - lined 2 x 16mm fire rated plasterboard
- Large ceiling area with 3-or-more spans for both the top cross rail and the furring channel
- Deflection limit of span/200 is suitable
- Shopping centre that is effectively sealed where the external walls have non-opening windows
- Building location is Brisbane
- Building Importance Level is 2
- Terrain Category is 2.5
- Floor of the internal suspended ceiling to be built is located 10m from ground level.

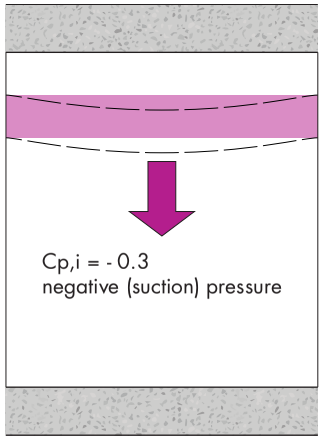

Case 2: Internal Ceiling $C_{p,i}$ = - 0.3 (suction)

1. Air-conditioned Hospitals, Offices and Shopping Centres (except loading docks) that are effectively sealed where the external walls have non-opening windows
2. Internal ceiling
3. Effectively sealed ceiling with an impermeable roof.

Step 1 *Determine $C_{p,i\ net}$*
From Section 2.3, first find the appropriate $C_{p,i}$. From the information above, the internal suspended ceiling is the same as Case 2, therefore the appropriate $C_{p,i}$ is 0.3.

Step 2 *Determine the Wind Region*
From Figure 2 'Australian Wind Regions' in Section 2.3, find Brisbane located in Wind Region B.

Step 3 *Determine the building's Importance Level (IL)* Usually found on the front page of the Structural Engineers notes for the project. In this case the IL is 2.

Step 4 *Determine the Terrain Category (TC)* of the surrounding landscape around the building. Also usually found on the front page of the Structural Engineers notes for the project. In this case the TC is 2.5.

Step 5 *Determine Ultimate (W_U) and Serviceability (W_S) Wind Pressures.*
The floor of the building where the ceiling is to be built is 10m above the ground level. Refer to Table 9 in Section 2.3 'Internal Wind Pressures $C_{p,i}$ = 0.3'. The pressures found are Wu = 0.49 kPa, and Ws = 0.23 kPa.

Step 6 *Determine ceiling frame.*
Use the relevant '38mm Top Cross Rail Suspended Ceiling Span Table - Region B' in Section 5.1. For this case the internal wind pressures are rounded up to the nearest tables nominated pressure which are
W_U = 0.59 kPa and W_S = 0.25 kPa.

Answer

A solution can be found using:

- 28mm Furring Channel (FC28) at 600mm centres
- 38mm Top Cross Rail (TCR38) spaced at 1200mm centres
- Hangers along the TCR38 at 840mm maximum intervals.
- Clip and anchor capacity is 1.70 kN which can be checked using Tables 4 and 5 'Ceiling Clip Capacity'

Table 9 Internal Wind Pressures $C_{p,i}$ =0.3

$C_{p,i}$ = Internal wind pressure coefficient

Building Importance Level 2																													
Region	A															B													
Ultimate Wind Speed V500 (m/s)	45															57													
Serviceability Wind Speed V25 (m/s)	37															39													
Terrain Category	1			1.5			2			2.5			3			1			1.5			2			2.5			3		
Height above ground (z)	10	25	50	10	25	50	10	25	50	10	25	50	10	25	50	10	25	50	10	25	50	10	25	50	10	25	50	10	25	50
$M_{z,cat}$	1.12	1.21	1.25	1.06	1.15	1.22	1.00	1.10	1.18	0.92	1.04	1.13	0.83	0.97	1.07	1.12	1.21	1.25	1.06	1.15	1.22	1.00	1.10	1.18	0.92	1.04	1.13	0.83	0.97	1.07
Ultimate Wind Pressure (kPa)	0.46	0.53	0.57	0.41	0.48	0.54	0.36	0.44	0.51	0.31	0.39	0.47	0.25	0.34	0.42	0.73	0.86	0.91	0.66	0.77	0.87	0.58	0.71	0.81	**0.49**	0.63	0.75	0.40	0.55	0.67
Serviceability Wind Pressure (kPa)	0.31	0.36	0.39	0.28	0.33	0.37	0.25	0.30	0.34	0.21	0.27	0.31	0.17	0.23	0.28	0.34	0.40	0.43	0.31	0.36	0.41	0.27	0.33	0.38	**0.23**	0.30	0.35	0.19	0.26	0.31

Worked Example continued

38mm Top Cross Rail Ceiling Span Table - REGION B

Refer to Section 2.3 for assistance determining the relevant wind pressures for a specific project.

38mm Top Cross Rail Ceiling Span Table	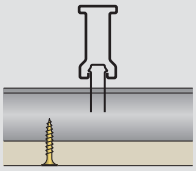	Up to BCA Building Importance Level 3	Ultimate pressure W_U (kPa)	0.59
			Serviceability pressure W_S (kPa)	0.25

Ceiling Lining	Furring Channel Spacing (mm)	Top Cross Rail Spacing (mm)	Single Span		Double Span		3-or-more Spans	
			Hanger Spacing (mm)	Hanger Demand (kN)	Hanger Spacing (mm)	Hanger Demand (kN)	Hanger Spacing (mm)	Hanger Demand (kN)
1 layer of 10mm	600	900	1400	0.73	1020	1.33	1100	1.32
		1050	1310 FC28	0.80	940 FC28	1.43	1020 FC28	1.42
		1200	1240 FC28	0.86	880 FC28	1.53	950 FC28	1.51
	450	1050	1310	0.80	1010	1.54	1100	1.53
		1200	1240 FC28	0.86	950 FC28	1.66	1030 FC28	1.64
		1350	1180 FC28	0.93	890 FC28	1.75	970 FC28	1.74
2 layers of 10mm	600	900	1330	0.79	960	1.42	1030	1.39
		1050	1240 FC28	0.86	890 FC28	1.53	960 FC28	1.51
		1200	1170 FC28	0.92	830 FC28	1.64	900 FC28	1.62
	450	900	1330	0.79	1030	1.52	1110	1.50
		1050	1240	0.86	950	1.64	1030	1.62
		1200	1170 FC28	0.92	890 FC28	1.75	960 FC28	1.73
1 layer of 13mm	600	900	1360	0.75	990	1.37	1070	1.36
		1050	1280 FC28	0.83	910 FC28	1.47	990 FC28	1.46
		1200	1210 FC28	0.89	860 FC28	1.59	920 FC28	1.56
	450	900	1360	0.75	1060	1.47	1150	1.46
		1050	1280	0.83	990	1.60	1070	1.58
		1200	1210 FC28	0.89	920 FC28	1.70	1000 FC28	1.69
2 layers of 13mm	600	900	1270	0.83	910	1.49	980	1.47
		1050	1190 FC28	0.91	840 FC28	1.60	900 FC28	1.57
		1200	1120 FC28	0.98	790 FC28	1.72	850 FC28	1.69
	450	900	1270	0.83	980	1.60	1060	1.59
		1050	1190	0.91	910	1.74	980	1.71
		1200	1120 FC28	0.98	800 FC28	1.74	880 FC28	1.75
3 layers of 13mm	600	750	1290	0.81	930	1.46	1000	1.44
		900	1200 FC28	0.90	850 FC28	1.60	920 FC28	1.59
		1050	1120 FC28	0.99	780 FC28	1.71	850 FC28	1.71
	450	750	1290	0.81	1000	1.57	1080	1.55
		900	1200	0.90	910	1.71	990	1.71
		1050	1120 FC28	0.99	800 FC28	1.76	870 FC28	1.75
1 layer of 16mm	600	900	1360	0.76	980	1.37	1060	1.36
		1050	1270 FC28	0.83	910 FC28	1.49	980 FC28	1.46
		1200	1200 FC28	0.90	850 FC28	1.59	920 FC28	1.57
	450	900	1360	0.76	1060	1.48	1150	1.47
		1050	1270	0.83	980	1.60	1060	1.58
		1200	1200 FC28	0.90	920 FC28	1.72	990 FC28	1.69
2 layers of 16mm	600	900	1260	0.84	900	1.50	970	1.48
		1050	1180 FC28	0.92	830 FC28	1.61	900 FC28	1.60
		1200	1110 FC28	0.99	780 FC28	1.73	840 FC28	1.70
	450	900	1260	0.84	970	1.61	1050	1.60
		1050	1180 FC28	0.92	900 FC28	1.75	970 FC28	1.72
		1200	1110 FC28	0.99	790 FC28	1.75	860 FC28	1.74
3 layers of 16mm	600	750	1270	0.82	920	1.48	990	1.45
		900	1190 FC28	0.92	840 FC28	1.62	900 FC28	1.59
		1050	1110 FC28	1.00	770 FC28	1.73	840 FC28	1.73
	450	750	1270	0.82	990	1.59	1070	1.57
		900	1190	0.92	900	1.73	980	1.73
		1050	1110 FC28	1.00	780 FC28	1.75	850 FC28	1.75

'FC28' indicates only 28mm Furring Channel is suitable. When 'FC28' is not present in the table both 18mm and 28mm Furring Channels are suitable.

Worked Example

External Ceilings

External ceilings including alfresco areas, carports, balconies, breezeways and foyers with plasterboard installed horizontally or sloping away from the main dwelling. External ceilings are subjected to harsher conditions than internal ceilings, and therefore they need additional protection from the weather. This extra protection is designed to control the major causes of external ceiling faults which are:

- Condensation on the plasterboard, ceiling framing, roof framing or roof lining and dripping down onto the ceiling
- Water penetrating the paint system
- Distortion of plasterboard joints
- Plasterboard swelling and sagging
- Mould growth
- Fastener popping
- Corrosion of ceiling framing.

Minimum Conditions to Use Plasterboard and Steel Ceiling Framing in External Ceilings

- The plasterboard and associated substrate must be designed for the appropriate loading conditions including wind loads. Down-struts must also be included to prevent uplift.
- The plasterboard and steel framing must be suitable for the application [Refer to 'Plasterboard' and 'Steel Framing' in Section 2.1]
- The cavity above the plasterboard ceiling must have adequate ventilation [Refer to 'Condensation and Ventilation' in Section 2.2]. Please note, continuous air-flow in and out of a ceiling cavity near salt water may decrease the durability of steel framing.
- Condensation on the back and front of the plasterboard lining and any steel framing must be controlled. Use condensation prevention measures such as, adequate roof cavity ventilation and thermal insulation. In particular, foil backed insulation must be used under a metal roof.
- Anchors and fasteners used must be minimum Class 3 or higher depending on the application, or protected from corrosion by other means. Note that stainless steel fasteners are not permitted with galvanised or Zincalume protected steels.
- The plasterboard, compounds and steel framing must not be subjected to any direct water, long periods of high humidity, sea spray or damp conditions.
- The plasterboard and compounds must be installed after the roof covering has been completely installed and sealed.
- Minimum 100mm clearance from external ceiling lining to lower edge of verandah beam or masonry lintel, otherwise provide protection against wind blown rain.
- Periodic inspections of any steel ceiling framing must be conducted to identify any areas of corrosion or damage which must be immediately rectified.

Installation Requirements for External Ceilings

- Use either 10mm **span**shield, 13mm **masta**shield, 10mm **opal**, 10mm or 13mm **water**shield, 10mm or 13mm **sound**shield, 13mm or 16mm **fire**shield, **multi**shield or **tru**rock.
- Ceiling framing at maximum 450mm framing centres.
- Provide additional framing around the perimeter by inserting trimmers between ceiling frames or installing steel angle, or installing additional ceiling battens.
- Fix the ceiling plasterboard using the 'Screw Only Method'. Nails are not permitted in this application.Additional screws may be required for high wind areas.
- Fix the perimeter of the plasterboard sheets using screws at 300mm maximum spacing.
- Install control joints at 6m maximum intervals.
- Back-block all plasterboard joints. [Refer to Section 7.2]
- Plaster set joints using two coats of **masta**base or **masta**longset and any Siniat finish coat.
- Roll or brush on a high quality sealer undercoat designed for exterior use.
- Use a premium exterior paint system that includes a mould inhibitor.

Please note that plasterboard must not be installed in eaves or as exterior cladding.

Thermal insulation is recommended directly above the plasterboard. This will minimise the temperature difference between the plasterboard and outside air, limiting ceiling sag and mould formation by reducing condensation on the plasterboard.

Steel Profile Information

Material

Manufacturer	Item	Grade	Ultimate	Yield	Coating
Siniat	Top Cross Rails	G300	340 MPa	300 MPa	AM150
	Furring Channels	G550	550 MPa	550 MPa	AM150

1. Steel grade and coating in accordance with AS 1397 *Continuous hot-dip metallic coated steel sheet and strip*

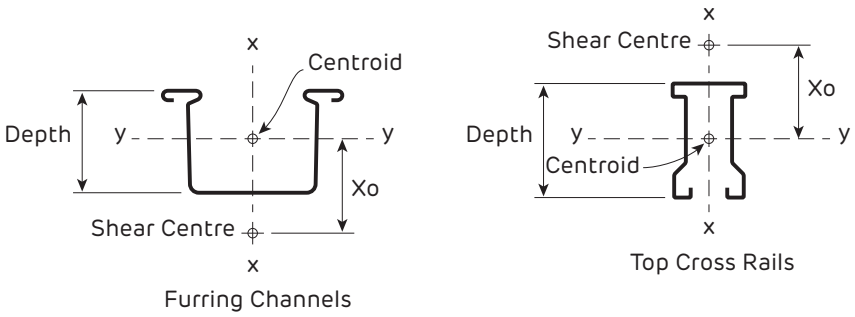

Section Properties

Profile	Dimensions (mm)		Shear Centre from Centroid (mm)	Area (mm^2)	Moment of Inertia (mm^4)		Section Modulus (mm^3)		Torsion Constant J (mm^4)	Warping Constant Iw (mm^6)
	Depth	BMT	Xo		Ixx	Iyy	Zxx	Zyy		
Furring Channels	18	0.42	-14.0	37.5	11,040	1,815	432	176	2.2	265,300
	28	0.42	-25.2	49.1	14,880	5,811	580	397	2.9	1,143,000
Top Cross Rails	25	0.75	-22.6	66.3	3,782	5,432	362	413	12.4	388,500
	38	0.75	-34.1	85.8	4,624	15,590	452	789	16.1	833,500

Plasterboard Layout

	Non-Fire Rated	Fire Rated
Sheet ceilings perpendicular to framing members.	✓	✓
Stagger face layer butt joints by 600mm minimum on adjoining sheets and between layers.	✓	✓
Stagger recessed edges by 300mm minimum between layers.	✓	✓
Follow the back-blocking requirements and butt joint placement for the level of finish selected. [Refer To Section 7]	✓	

- Sheet ceilings parallel to the light source to reduce the effect of glancing light.
- Minimise butt joints by using the longest sheet possible.
- Butt joints on underlying layers (not face layer) may be made on the same framing member.
- For 2 layer systems at 450mm centres, face layer butt joints may be fixed to framing members.

Plasterboard Fixing

	Non-Fire Rated	Fire Rated
Drive screws to just below the sheet surface, taking care not to break the paper linerboard. For over-driven screws, install another screw 20mm away. Leave or remove the over-driven screw and patch.	✓	✓
Use laminating screws to fix floating butt joints in the second and third layer.	✓	✓
Screw and Adhesive Method		
Apply mastagrip Stud Adhesive after the frame is clean, dry, and free from grease, dust and other contaminants.	✓	
Apply mastagrip daubs 200mm minimum from screws and plasterboard edges.	✓	
Screw Only Method		
Use the 'Screw Only Method' for fire rated ceilings. Stud adhesive is not permitted.	✓	✓

The 'Screw and Adhesive Method' is recommended for non-fire rated applications. mastagrip will:

- Minimise screw popping
- Reduce the number of screw heads that may show in glancing light
- Assist in compensating for frame irregularities.

Screw Type and Minimum Size for the Installation of Plasterboard to Steel

Plasterboard Thickness	1st Layer	2nd Layer	3rd Layer	4th Layer
6.5mm	6g x 25mm screw	6g x 25mm screw	-	-
10mm	6g x 25mm screw	6g x 41mm screw *	-	-
13mm	6g x 25mm screw	6g x 41mm screw *	7g x 57mm screw *	-
16mm	6g x 32mm screw	6g x 45mm screw *	8g x 65mm screw *	8g x 75mm screw *

For steel ≤ 0.75mm BMT, use fine thread needle point screws.

For steel ≥ 0.75mm BMT, use fine thread drill point screws.
*10g x 38mm Laminating screws may be used as detailed in installation diagrams.

Fastener Type and Minimum Size for the Installation of Plasterboard to Softwood Timber

Plasterboard Thickness	1st Layer	2nd Layer	3rd Layer	4th Layer
6.5mm	2.8 x 30mm galvanised nail or 2.8 x 25mm ring shank nail or 6g x 25mm screw	2.8 x 40mm galvanised nail or 2.8 x 30mm ring shank nail or 6g x 32mm screw	-	-
10mm	2.8 x 40mm galvanised nail or 2.8 x 30mm ring shank nail or 6g x 32mm screw	2.8 x 50mm galvanised nail or 6g x 41mm screw *	-	-
13mm	2.8 x 40mm galvanised nail or 2.8 x 30mm ring shank nail or 6g x 41mm screw	2.8 x 50mm galvanised nail or 7g x 50mm screw *	3.75 x 75mm galvanised nail or 8g x 65mm screw *	-
16mm	2.8 x 50mm galvanised nail or 7g x 45mm screw	3.15 x 65mm galvanised nail or 8g x 60mm screw *	3.75 x 75mm galvanised nail or 8g x 75mm screw *	10g x 100mm fine thread screw *

*10g x 38mm Laminating screws may be used as detailed in installation diagrams.

FIGURE 7 Non-Fire Rated - 1 Layer
Fastener and Adhesive Method

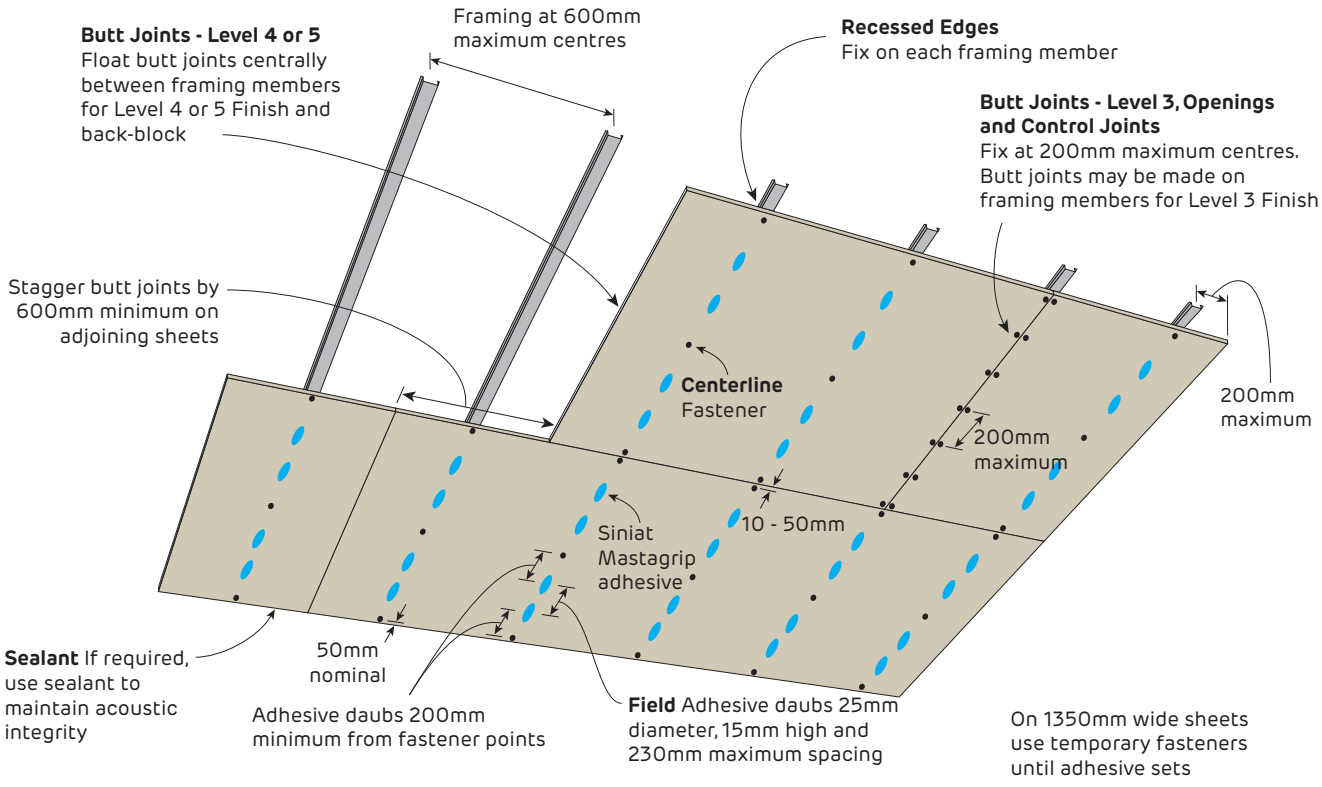

Fixing Pattern Table

Sheet Width	Fixing Pattern
600mm	F F F F
900mm	F A F/F A F
1200mm	F A A F/F A A F
1350mm	F A A F/F A A F

F = One screw or nail
F/F = One screw or double nails
A = One adhesive daub
Note: On 1350mm wide sheets use temporary fasteners until adhesive sets.

Maximum Ultimate Limit State Wind Load Table (kPa)

Plasterboard Thickness	Maximum Ceiling Frame Spacing			
	600mm	450mm	400mm	300mm
10mm	0.90	1.25	1.45	2.00
13mm	1.00	1.40	1.60	2.20
16mm	1.00	1.40	1.60	2.20

1. Calculations do not include the framing which must be independently designed to suit the desired load.
2. Calculations include a ceiling insulation with maximum weight of 2.5 kg/m2 (equivalent to R5.0 Pink® Batts Ceiling insulation).
3. If higher internal wind pressures are expected, please contact Siniat for specific design.

FIGURE 8 Non-Fire Rated - 1 Layer
1/3 Fastener and Adhesive Method

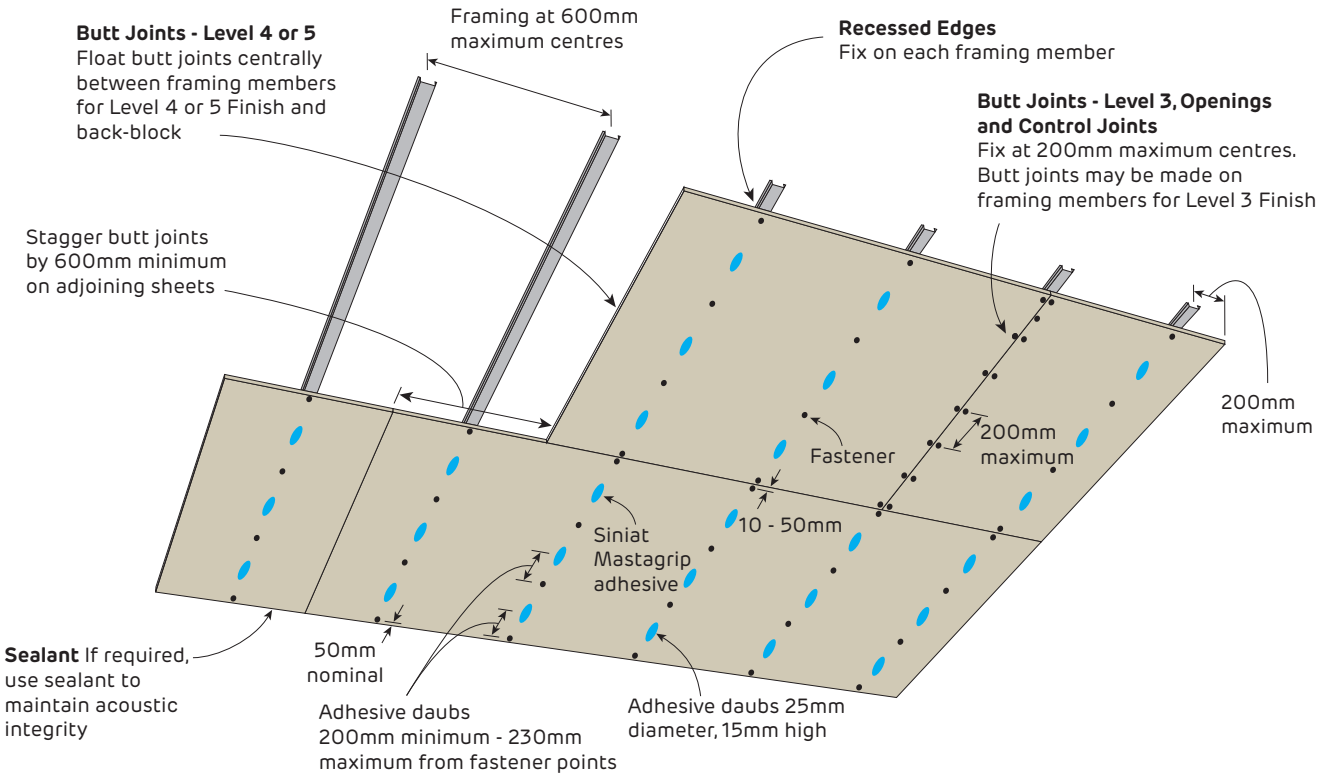

Fixing Pattern Table

Sheet Width	Fixing Pattern
600mm	F F F F
900mm	F A F A F
1200mm	F A F A F A F
1350mm	F A F A F A F

F = One nail or screw
A = One adhesive daub
Note: On 1350mm wide sheets use temporary fasteners until adhesive sets.

Maximum Ultimate Limit State Wind Load Table (kPa)

Plasterboard Thickness	Maximum Ceiling Frame Spacing			
	600mm	450mm	400mm	300mm
10mm	0.90	1.25	1.45	2.00
13mm	1.00	1.40	1.60	2.20
16mm	1.00	1.40	1.60	2.20

1. Calculations do not include the framing which must be independently designed to suit the desired load.
2. Calculations include a ceiling insulation with maximum weight of 2.5 kg/m2 (equivalent to R5.0 Pink® Batts Ceiling insulation).
3. If higher internal wind pressures are expected, please contact Siniat for specific design.

FIGURE 9 Non-Fire Rated - 1 Layer
Fastener Only Method

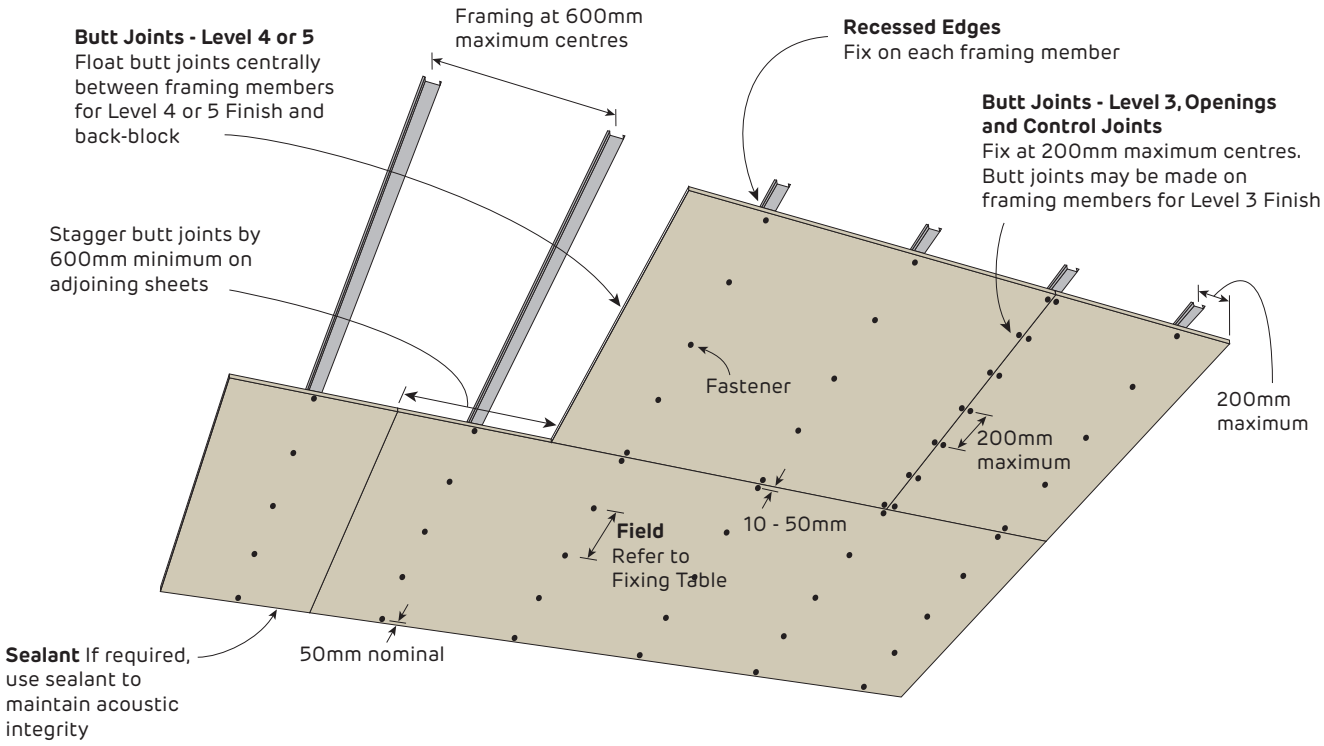

Fixing Pattern Table

Sheet Width	Screw Fixing Pattern
600mm	S S S (3)
900mm	S S S S (4)
1200mm	S S S S S (5)
1350mm	S S S S S S (6)

S = One screw

Maximum Ultimate Limit State Wind Load Table (kPa)

Plasterboard Thickness	Maximum Ceiling Frame Spacing			
	600mm	450mm	400mm	300mm
10mm	0.67	0.93	1.06	1.45
13mm	0.73	1.02	1.16	1.60
16mm	0.73	1.02	1.16	1.60

1. Calculations do not include the framing which must be independently designed to suit the desired load.
2. Calculations include a ceiling insulation with maximum weight of 2.5 kg/m2 (equivalent to R5.0 Pink® Batts Ceiling insulation).
3. If higher internal wind pressures are expected, please contact Siniat for specific design.

FIGURE 10 Non-Fire Rated - 2 Layers
Screw Only Method

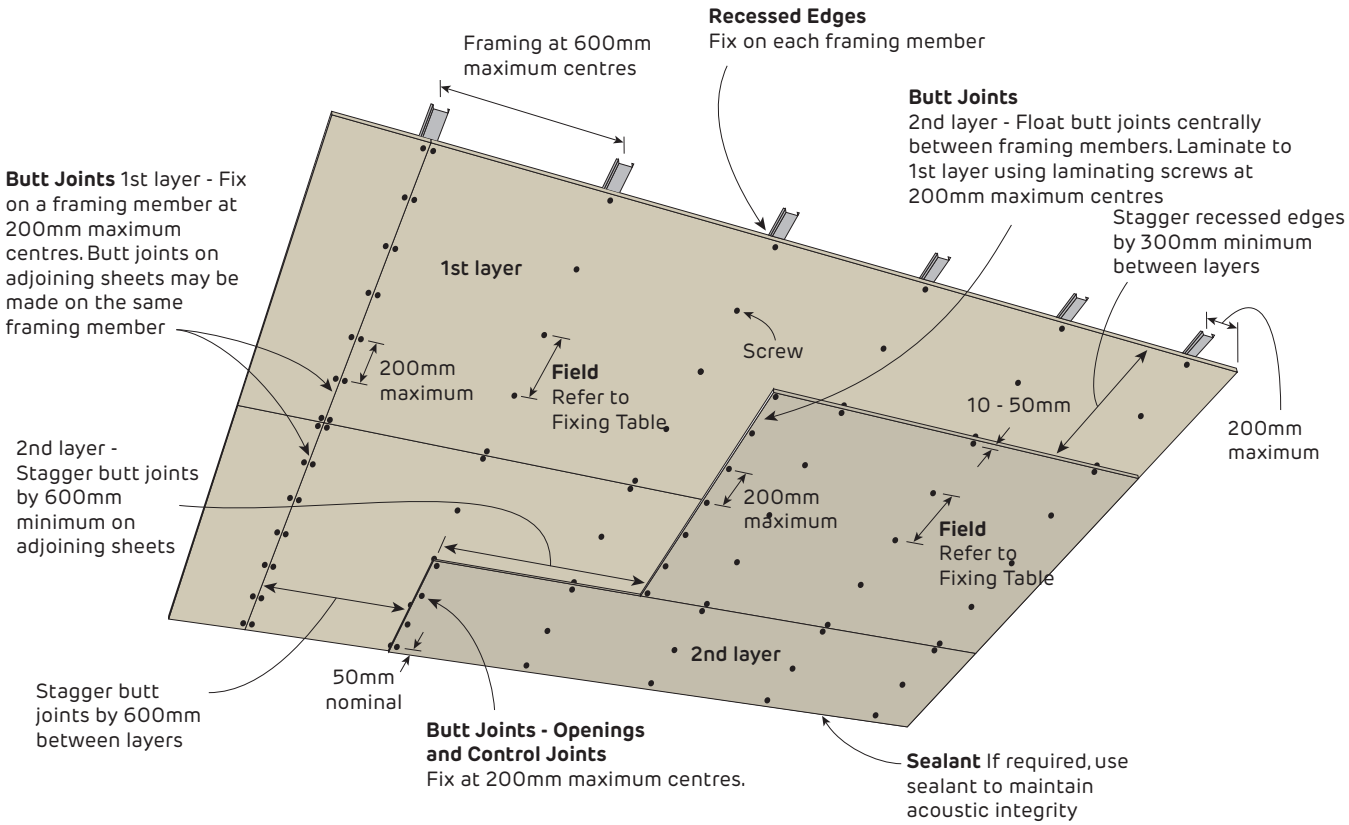

Fixing Pattern Table

Sheet Width	Screw Fixing Pattern
600mm	S S S (3)
900mm	S S S S (4)
1200mm	S S S S S (5)
1350mm	S S S S S S (6)

S = One screw

Maximum Ultimate Limit State Wind Load Table (kPa)

Plasterboard Thickness	Maximum Ceiling Frame Spacing			
	600mm	450mm	400mm	300mm
10mm	0.67	0.93	1.06	1.45
13mm	0.73	1.02	1.16	1.60
16mm	0.73	1.02	1.16	1.60

1. Calculations do not include the framing which must be independently designed to suit the desired load.
2. Calculations include a ceiling insulation with maximum weight of 2.5 kg/m2 (equivalent to R5.0 Pink® Batts Ceiling insulation).
3. If higher internal wind pressures are expected, please contact Siniat for specific design.

FIGURE 11 Fire Rated - 1 Layer
Screw Only Method

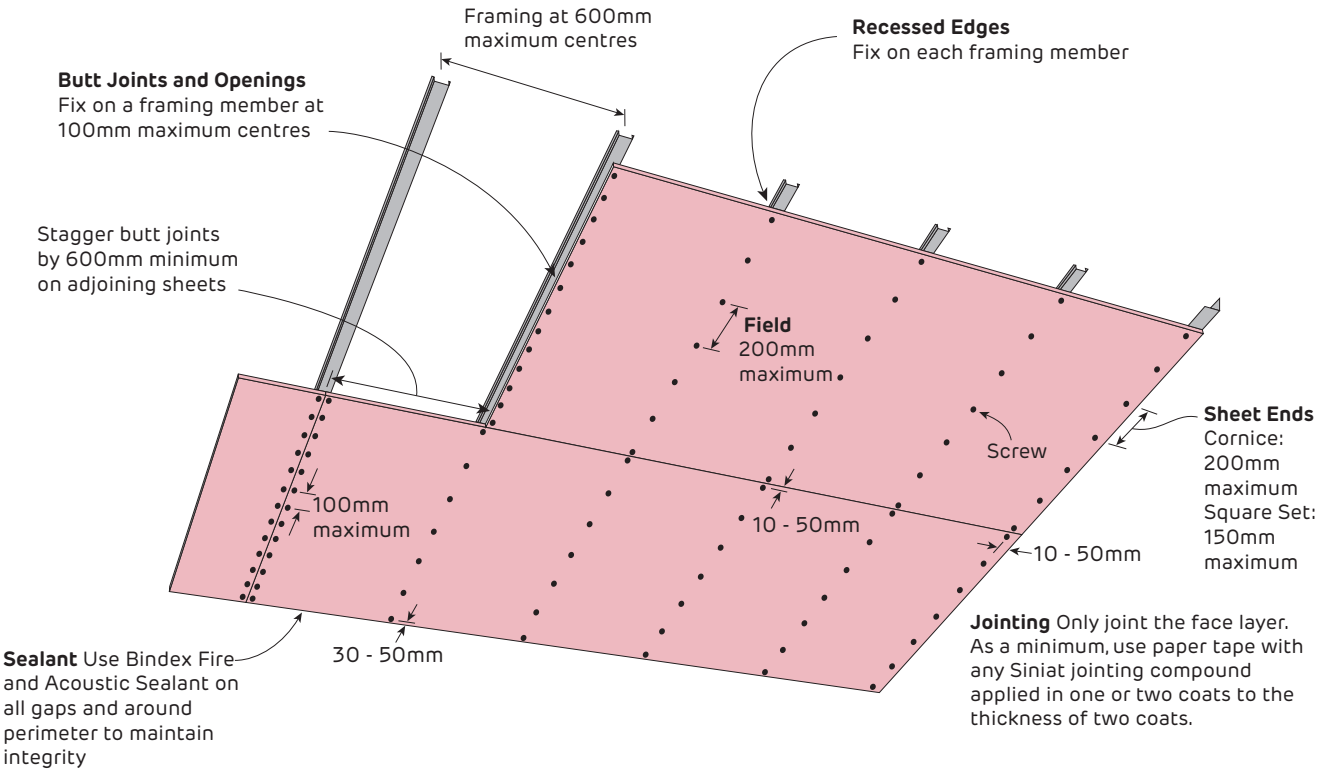

Fixing Pattern Table

Sheet Width	Screw Fixing Pattern
600mm	S S S S (4)
900mm	S S S S S S (6)
1200mm	S S S S S S S (7)
1350mm	S S S S S S S S (8)

S = One screw

Maximum Ultimate Limit State Wind Load Table (kPa)

Plasterboard Thickness	Maximum Ceiling Frame Spacing			
	600mm	450mm	400mm	300mm
13mm	1.15	1.60	1.80	2.45
16mm	1.15	1.60	1.80	2.45

1. Calculations do not include the framing which must be independently designed to suit the desired load.
2. Calculations include a ceiling insulation with maximum weight of 2.5 kg/m2 (equivalent to R5.0 Pink® Batts Ceiling insulation).
3. If higher internal wind pressures are expected, please contact Siniat for specific design.

FIGURE 12 Fire Rated - 2 Layers
Screw Only Method

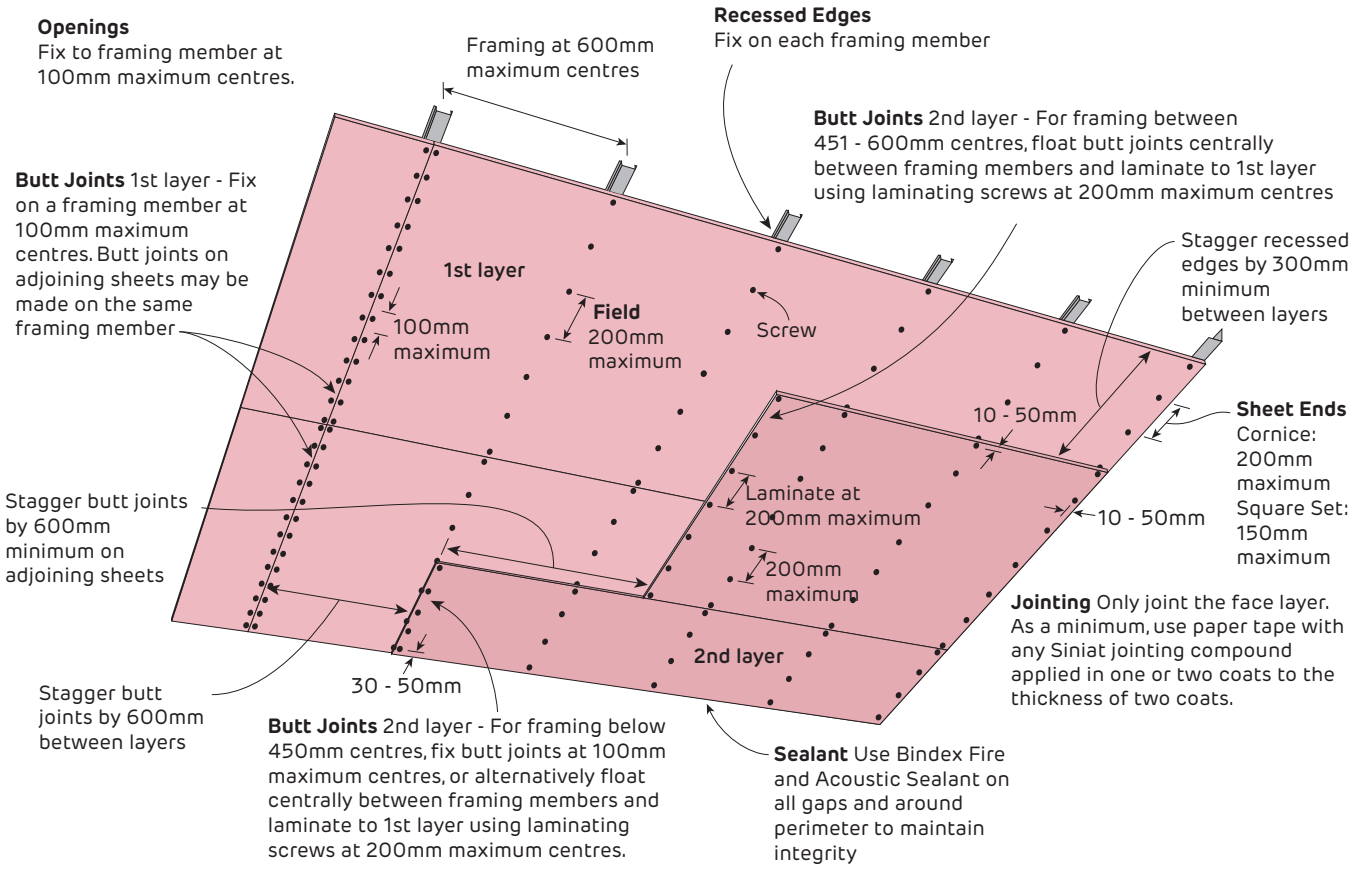

Fixing Pattern Table

Sheet Width	Screw Fixing Pattern
600mm	S S S S (4)
900mm	S S S S S S (6)
1200mm	S S S S S S S (7)
1350mm	S S S S S S S S (8)

S = One screw

Maximum Ultimate Limit State Wind Load Table (kPa)

Plasterboard Thickness	Maximum Ceiling Frame Spacing			
	600mm	450mm	400mm	300mm
13mm	1.15	1.60	1.80	2.45
16mm	1.15	1.60	1.80	2.45

1. Calculations do not include the framing which must be independently designed to suit the desired load.
2. Calculations include a ceiling insulation with maximum weight of 2.5 kg/m2 (equivalent to R5.0 Pink® Batts Ceiling insulation).
3. If higher internal wind pressures are expected, please contact Siniat for specific design.

FIGURE 13 Fire Rated - 3 Layers
Screw Only Method

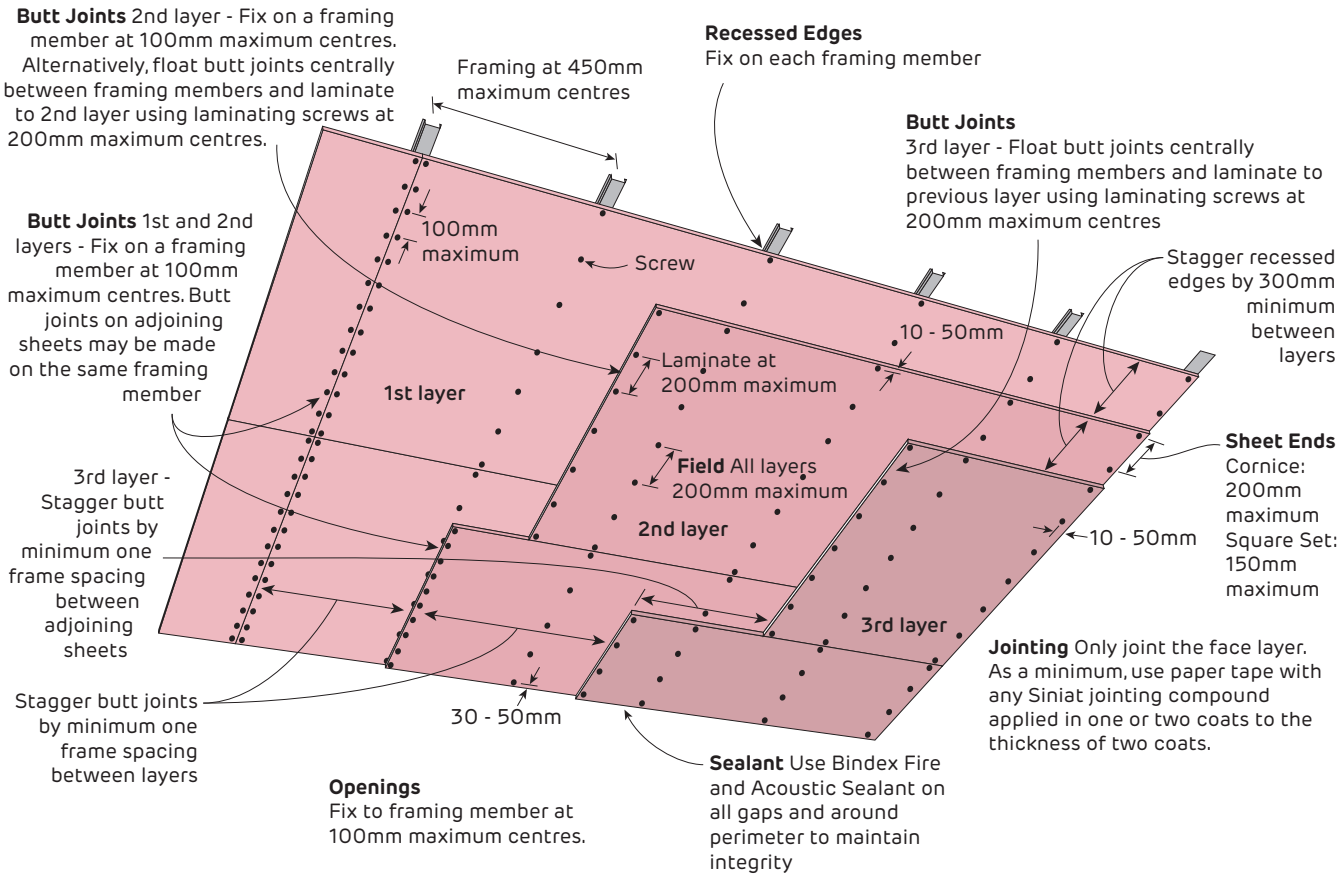

Fixing Pattern Table

Sheet Width	Screw Fixing Pattern
600mm	S S S S (4)
900mm	S S S S S S (6)
1200mm	S S S S S S S (7)
1350mm	S S S S S S S S (8)

S = One screw

Maximum Ultimate Limit State Wind Load Table (kPa)

Plasterboard Thickness	Maximum Ceiling Frame Spacing			
	600mm	450mm	400mm	300mm
13mm	1.15	1.60	1.80	2.45
16mm	1.15	1.60	1.80	2.45

1. Calculations do not include the framing which must be independently designed to suit the desired load.
2. Calculations include a ceiling insulation with maximum weight of 2.5 kg/m2 (equivalent to R5.0 Pink® Batts Ceiling insulation).
3. If higher internal wind pressures are expected, please contact Siniat for specific design.

FIGURE 14 Fire Rated - 4 Layers
Screw Only Method

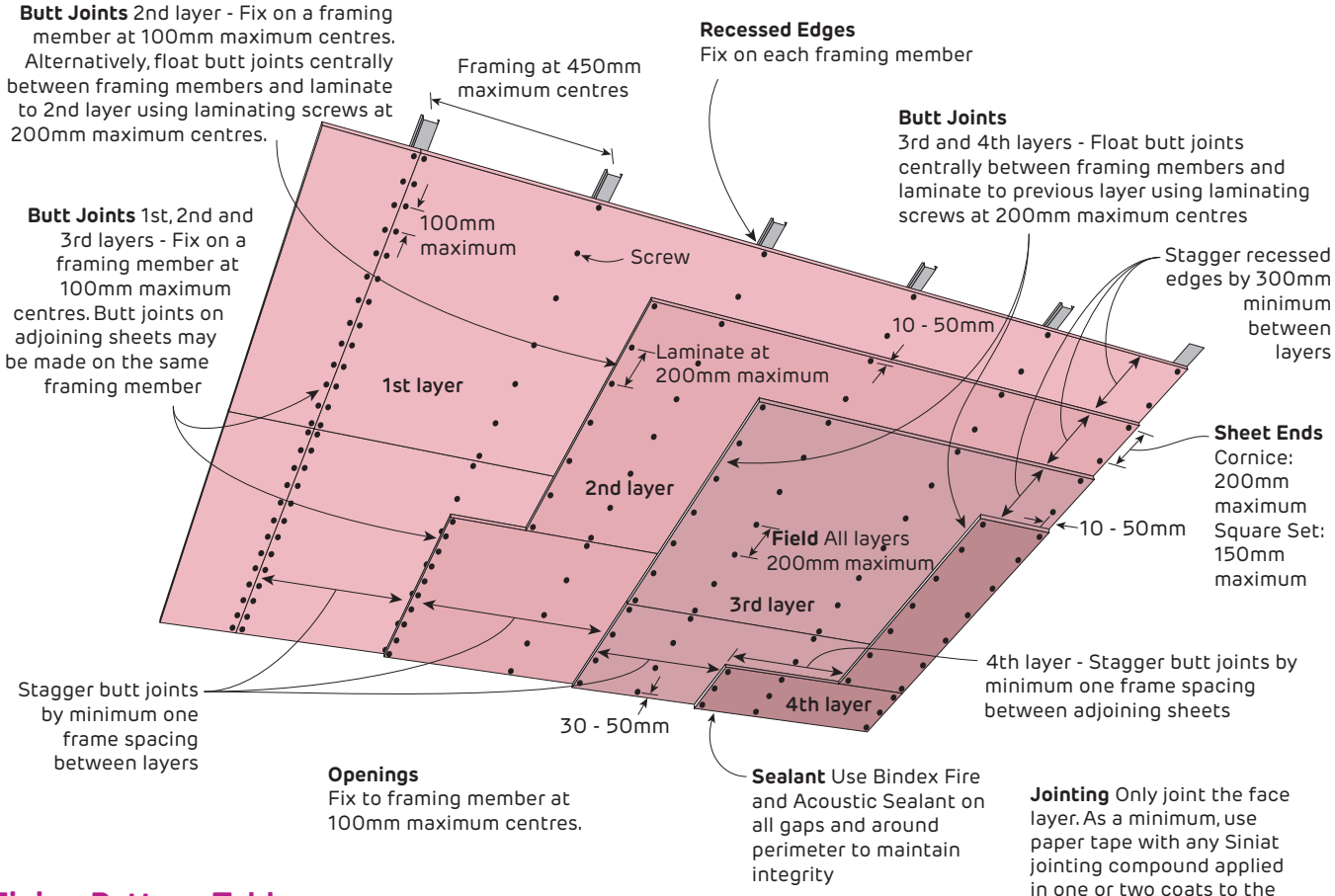

Fixing Pattern Table

Sheet Width	Screw Fixing Pattern
600mm	S S S S (4)
900mm	S S S S S S (6)
1200mm	S S S S S S S (7)
1350mm	S S S S S S S S (8)

S = One screw

Maximum Ultimate Limit State Wind Load Table (kPa)

Plasterboard Thickness	Maximum Ceiling Frame Spacing			
	600mm	450mm	400mm	300mm
13mm	1.15	1.60	1.80	2.45
16mm	1.15	1.60	1.80	2.45

1. Calculations do not include the framing which must be independently designed to suit the desired load.
2. Calculations include a ceiling insulation with maximum weight of 2.5 kg/m2 (equivalent to R5.0 Pink® Batts Ceiling insulation).
3. If higher internal wind pressures are expected, please contact Siniat for specific design.

Fire Rated and Non-Fire Rated
Internal Direct Fix Ceiling Frames



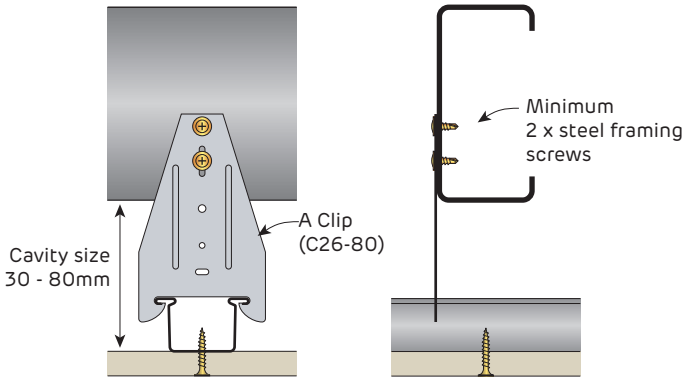

FIGURE 15 A Clip and Furring Channel
Perspective and Sections

Direct fixing clips may generate noise when fixed to materials subject to daily thermal expansion and contraction

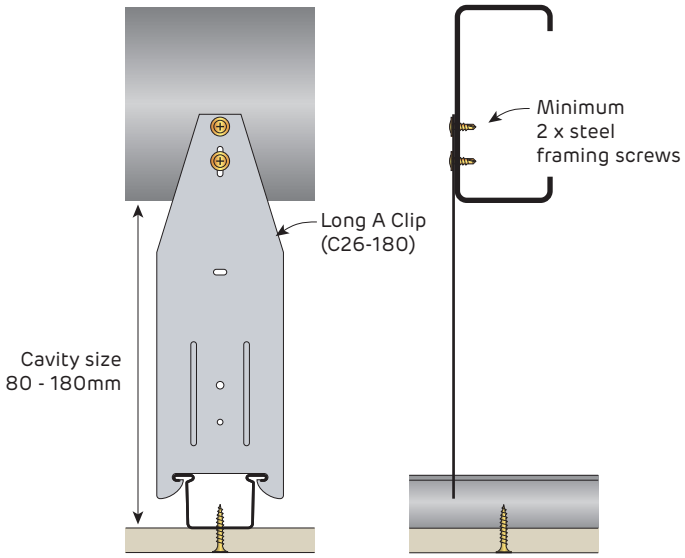

FIGURE 16 Long A Clip and Furring Channel
Perspective and Sections

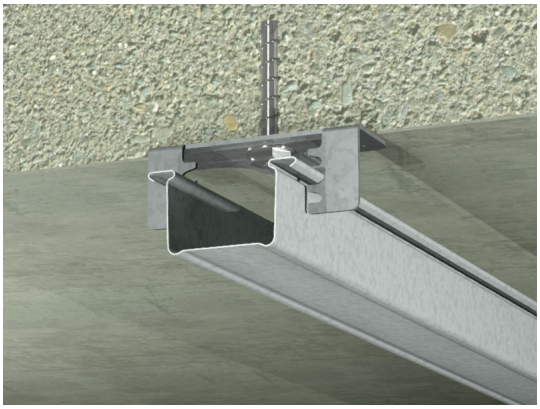

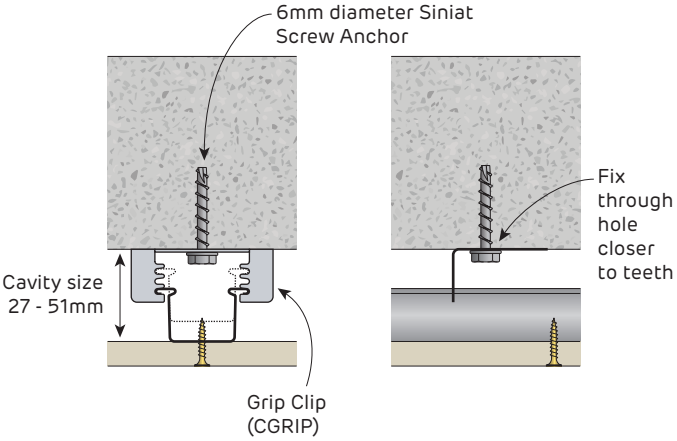

FIGURE 17 Grip Clip and Furring Channel
Perspective and Sections

Fire Rated and Non-Fire Rated
Internal Direct Fix Ceiling Frames

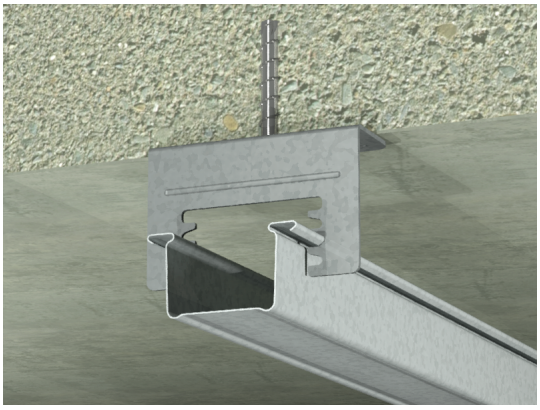

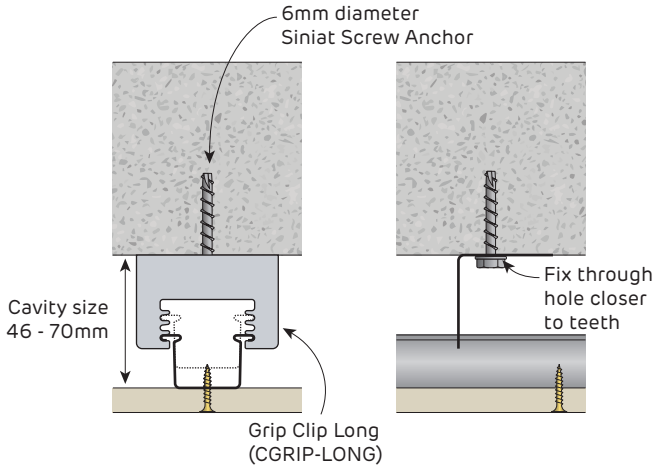

FIGURE 18 Grip Clip Long and Furring Channel
Perspective and Sections

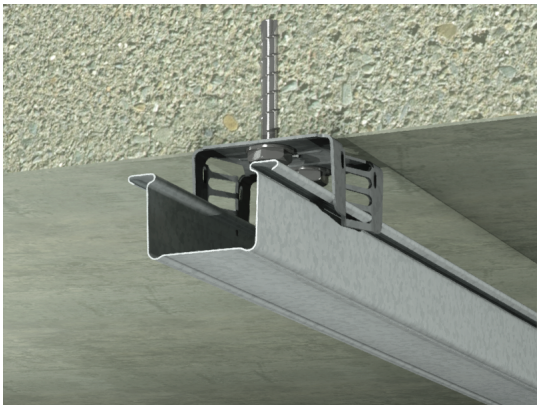

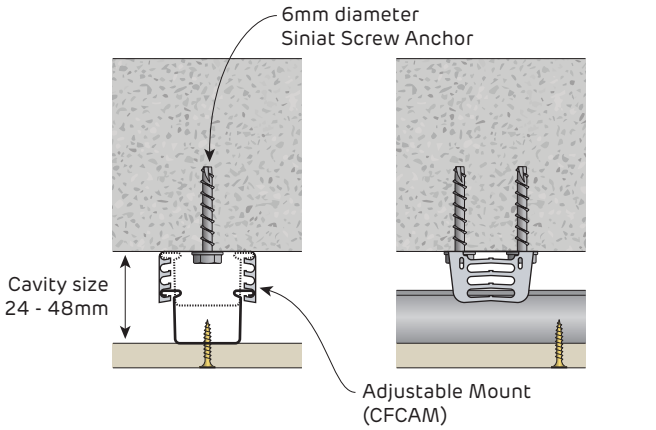

FIGURE 19 Adjustable Mount and Furring Channel
Perspective and Sections

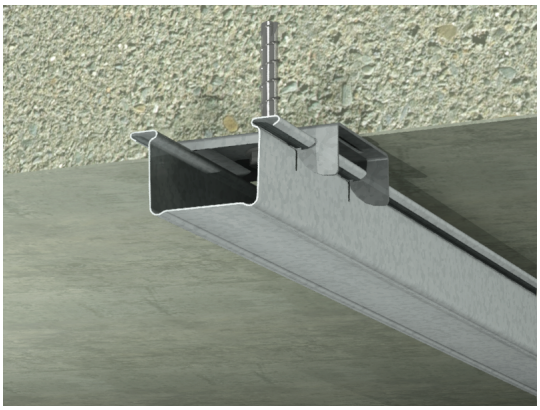

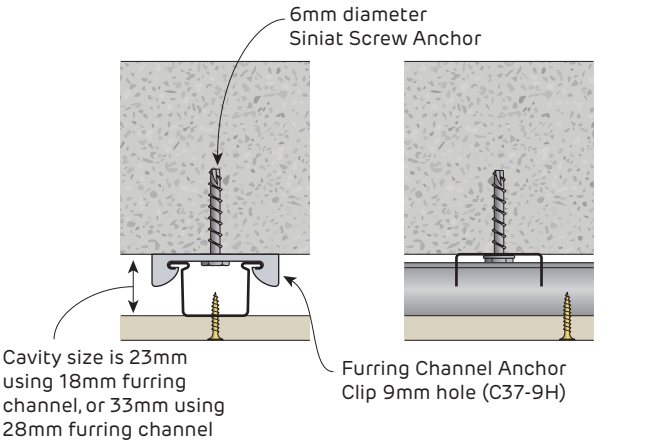

FIGURE 20 Anchor Clip 9mm hole and Furring Channel
Perspective and Sections

Fire Rated and Non-Fire Rated
Internal Direct Fix Ceiling Frames - Acoustic Clips

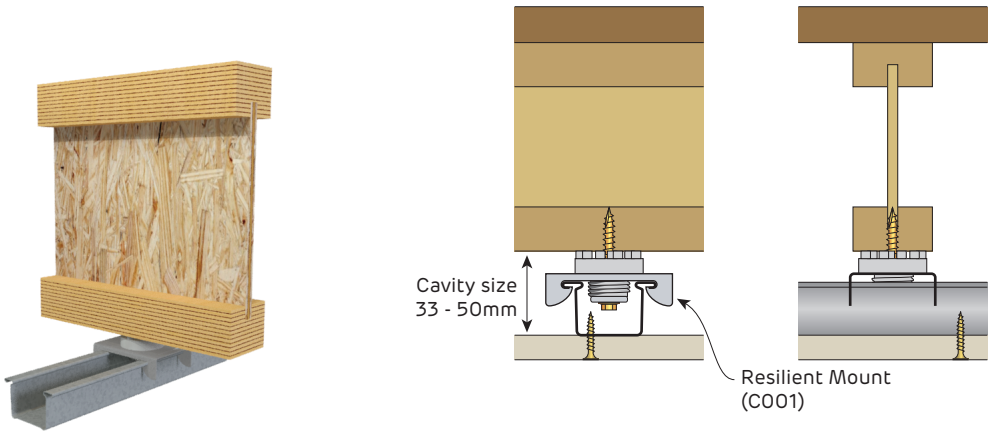

FIGURE 21 **Resilient Mount and Furring Channel**
Perspective and Sections

Fire Rated and Non-Fire Rated
Internal Suspended Rod Clips

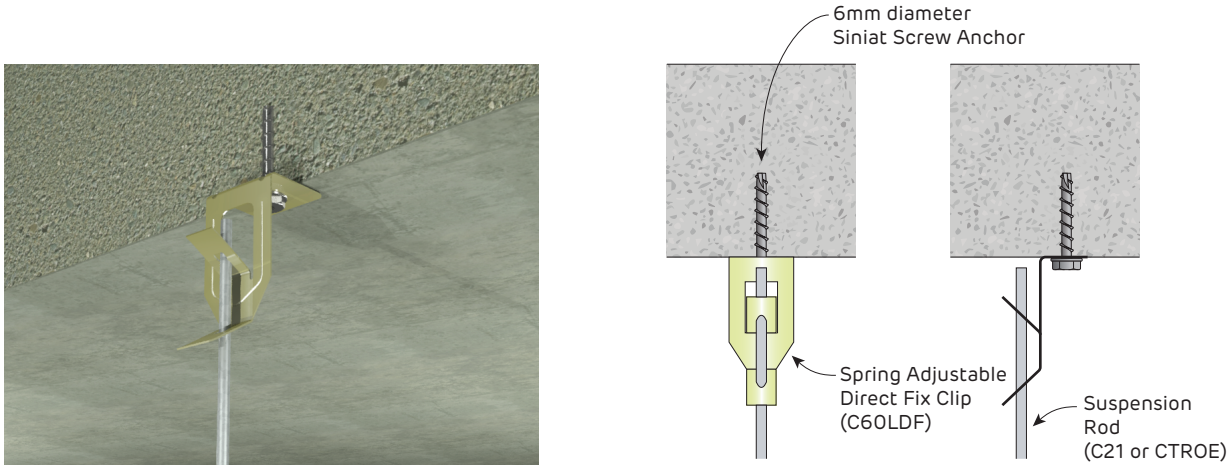

FIGURE 22 Spring Adjustable Direct Fix Clip to Concrete
Perspective and Sections

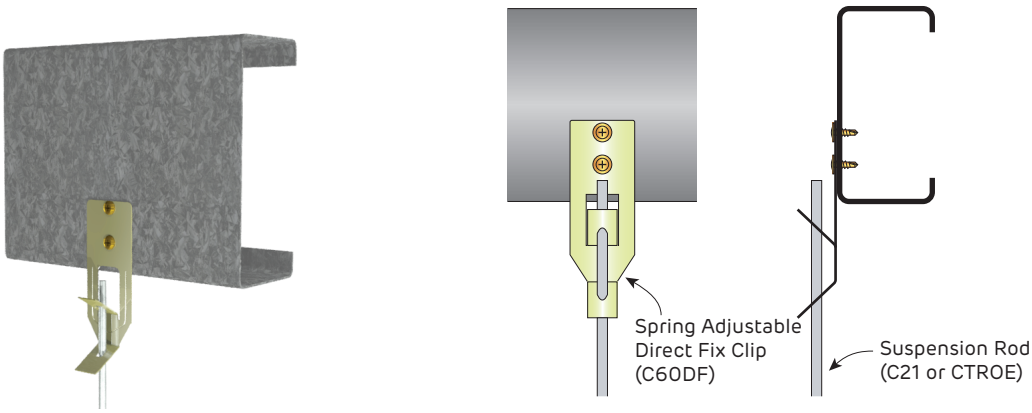

FIGURE 23 Spring Adjustable Direct Fix Clip to Purlin
Perspective and Sections

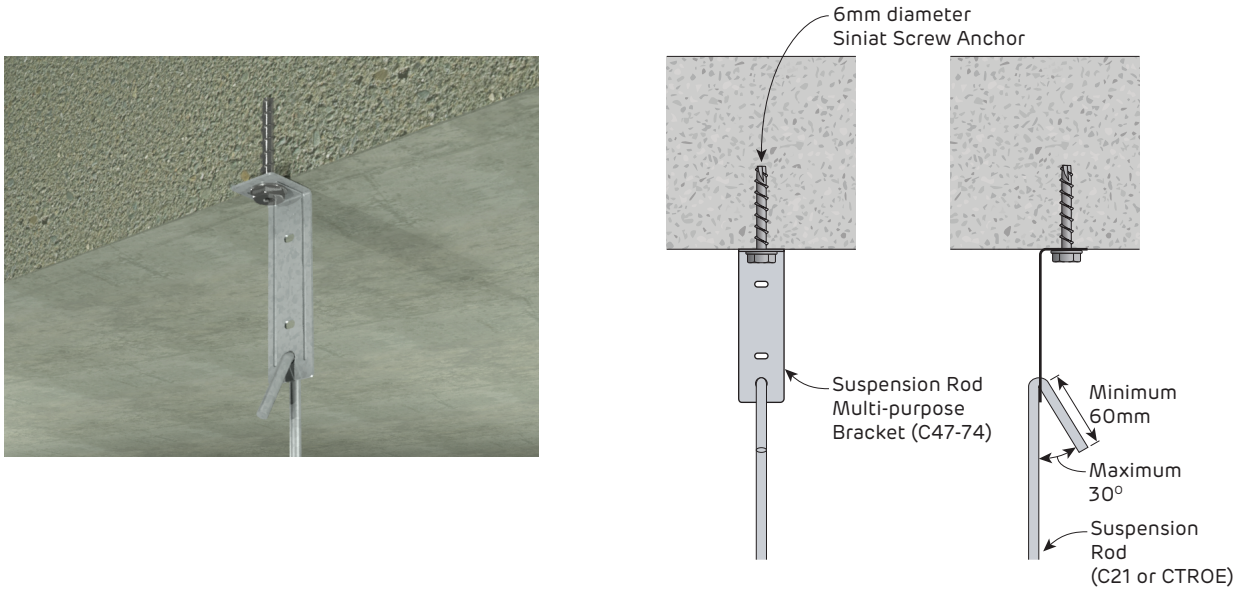

FIGURE 24 Suspension Rod Multi-purpose Bracket
Perspective and Sections

Fire Rated and Non-Fire Rated
Internal Suspended Rod Clips

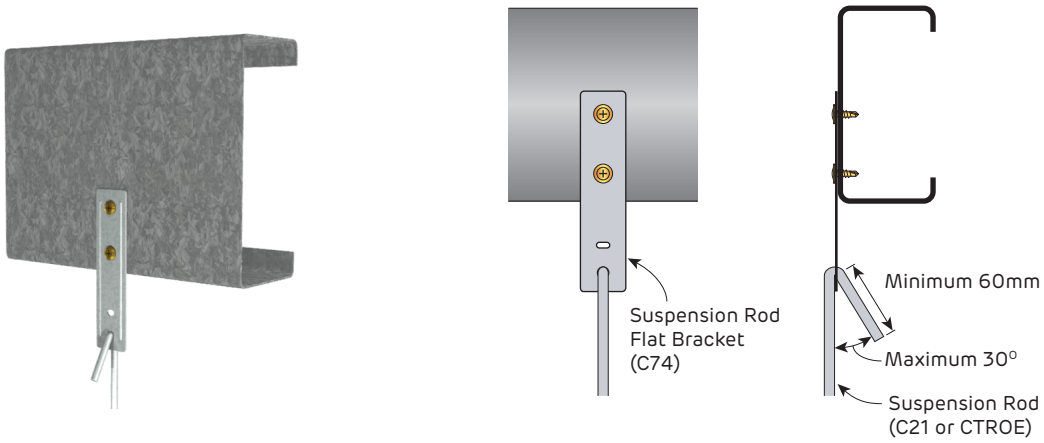

FIGURE 25 Suspension Rod Flat Bracket
Perspective and Sections

Fire Rated and Non-Fire Rated
Top Cross Rail Clips

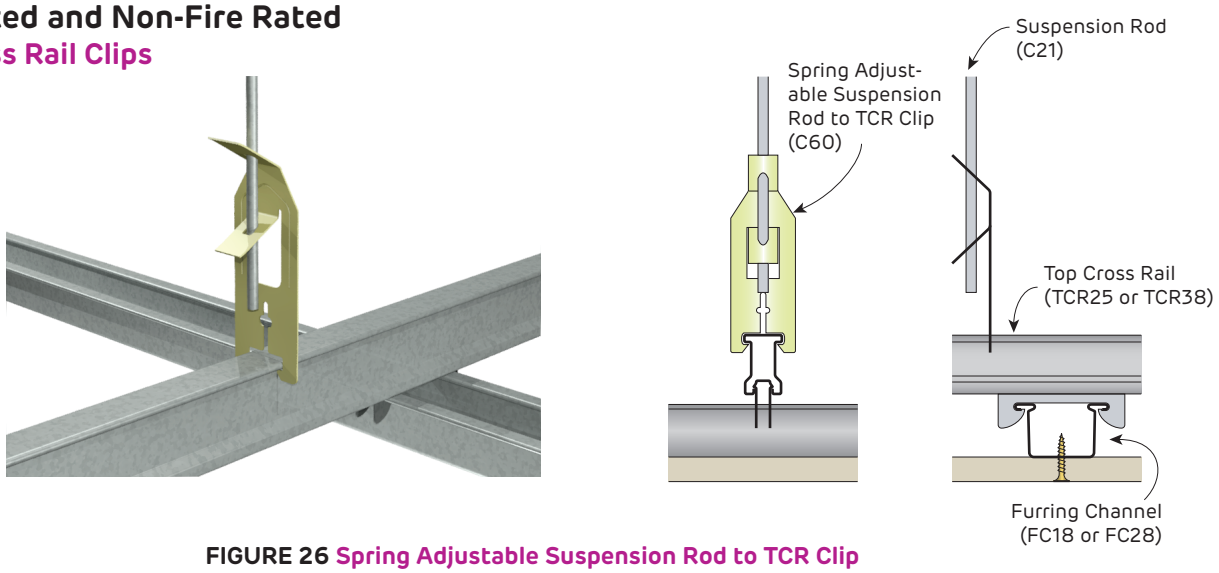

FIGURE 26 Spring Adjustable Suspension Rod to TCR Clip
Perspective and Sections

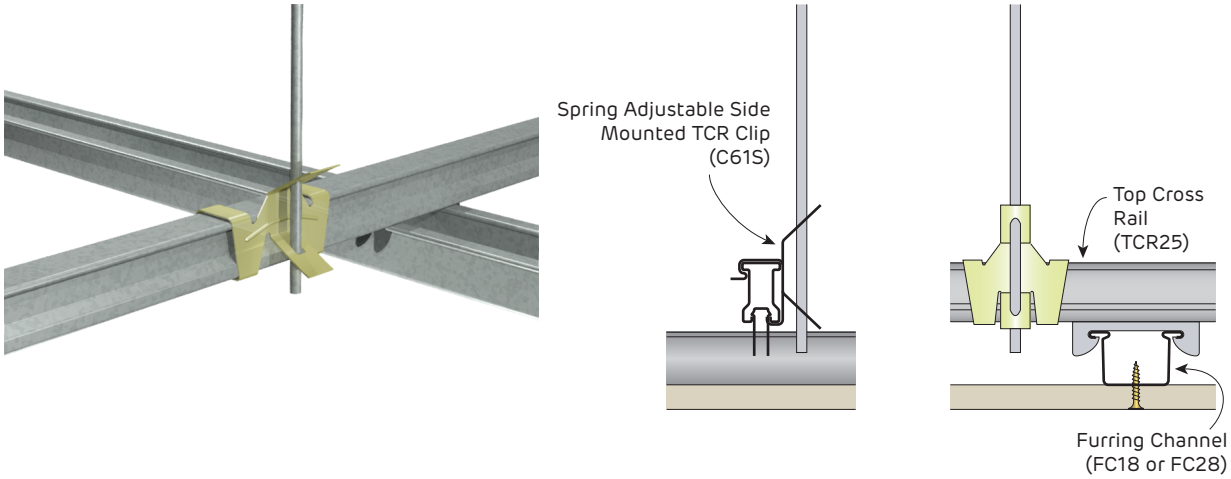

FIGURE 27 Spring Adjustable Side Mounted TCR Clip
Perspective and Sections

Fire Rated and Non-Fire Rated
Top Cross Rail Clips

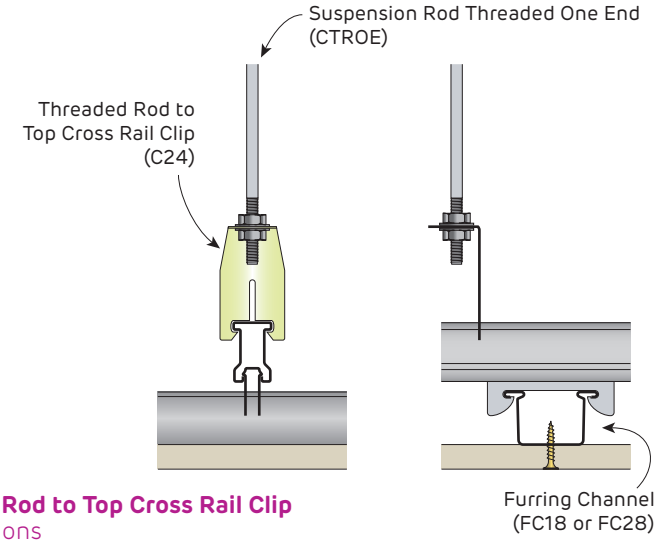

FIGURE 28 Threaded Rod to Top Cross Rail Clip
Perspective and Sections

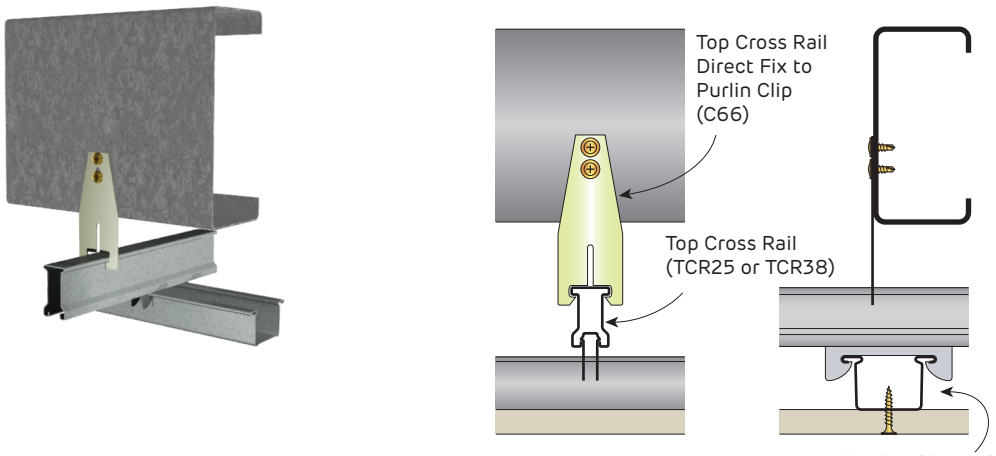

FIGURE 29 Top Cross Rail Direct Fix Clip to Purlin
Perspective and Sections

Fire Rated and Non-Fire Rated
Locking Key

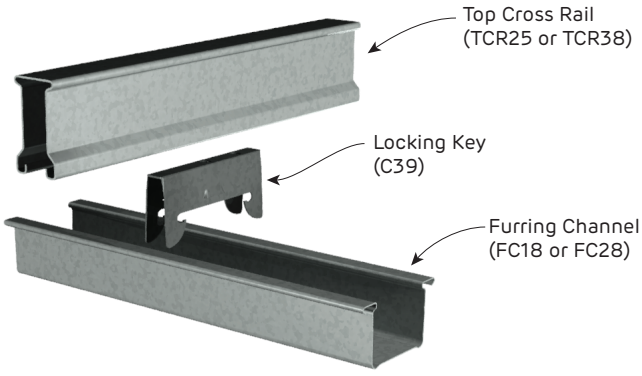

FIGURE 30 Locking Key
Perspective

Non-Fire Rated
Internal Direct Fix Ceiling Frames

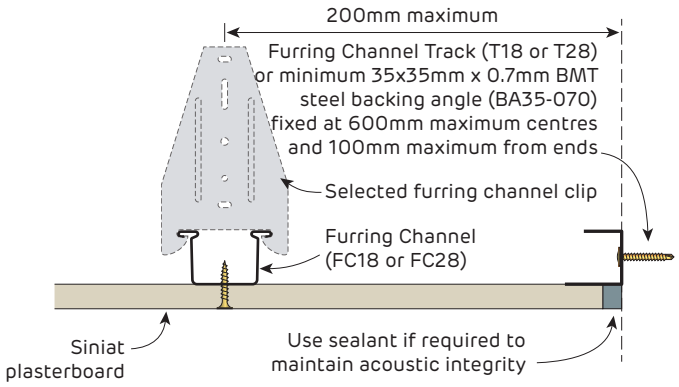

FIGURE 31 Direct Fix Ceiling Frame
Perimeter detail for acoustic integrity
Section

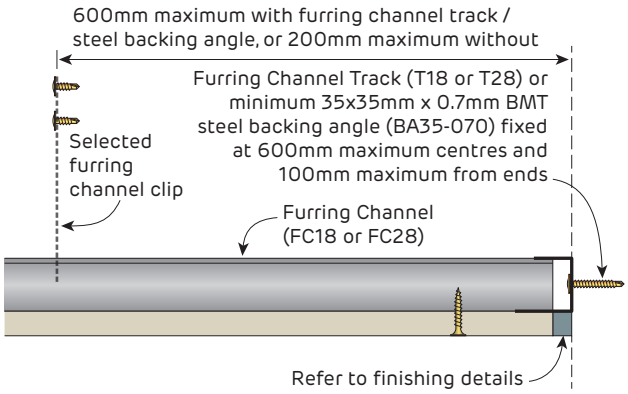

FIGURE 32 Direct Fix Ceiling Frame
Perimeter detail for acoustic integrity
Section

Suspended ceiling systems like battens installed with clips, do not provide sufficient diaphragm action to transfer wind loads to bracing walls. As such, an alternative method of transferring these loads must be used.

Non-Fire Rated
Internal Suspended Ceiling Frames

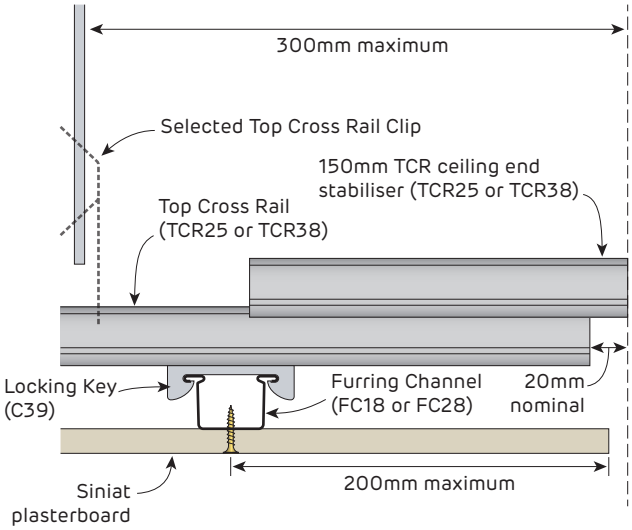

FIGURE 33 Suspended Ceiling Frame
Perimeter detail
Section

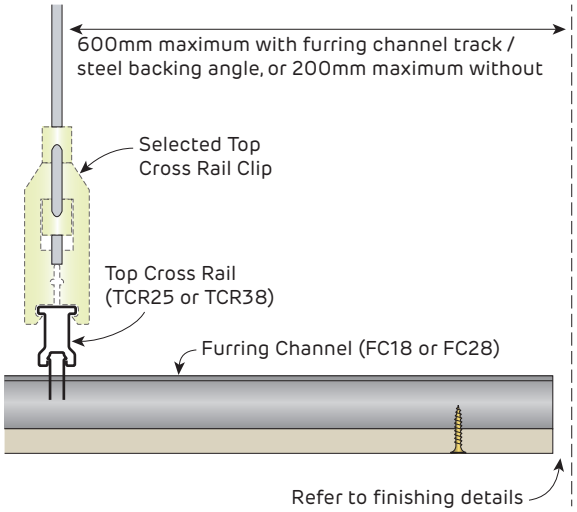

FIGURE 34 Suspended Ceiling Frame
Perimeter detail
Section

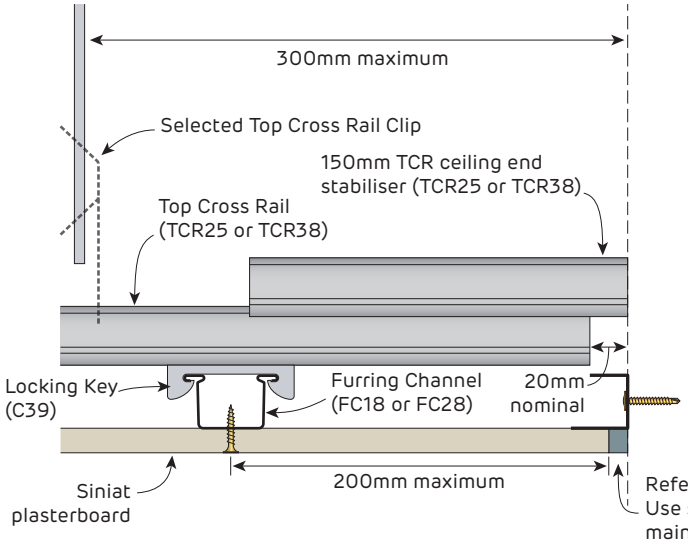

FIGURE 35 Suspended Ceiling Frame
Perimeter detail for acoustic integrity
Section

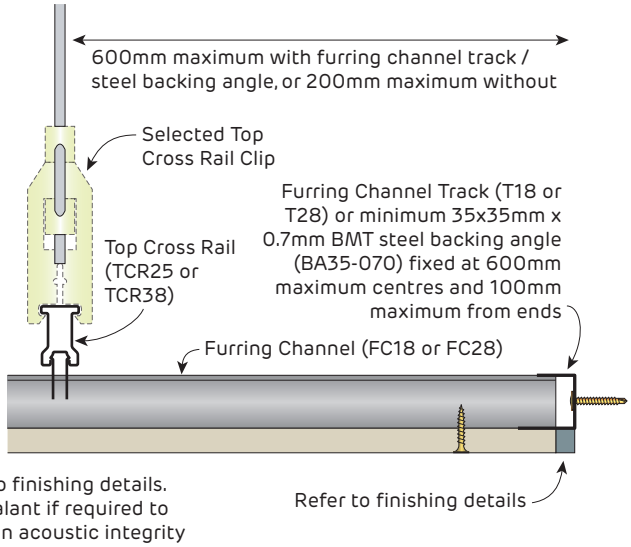

FIGURE 36 Suspended Ceiling Frame
Perimeter detail for acoustic integrity
Section

Fire Rated
Internal Direct Fix Ceiling Frames

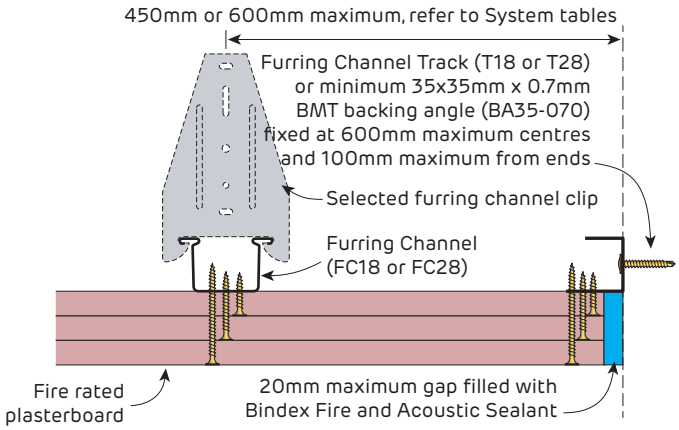

FIGURE 37 Direct Fix Ceiling
Perimeter detail for fire and acoustic integrity Section

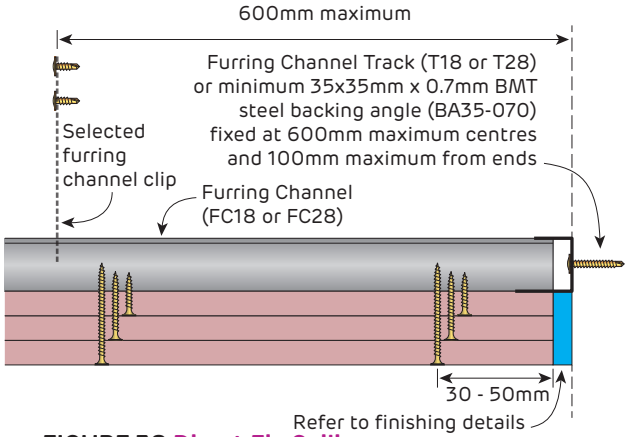

FIGURE 38 Direct Fix Ceiling
Perimeter detail for fire and acoustic integrity Section

Fire Rated
Internal Suspended Ceiling Frames

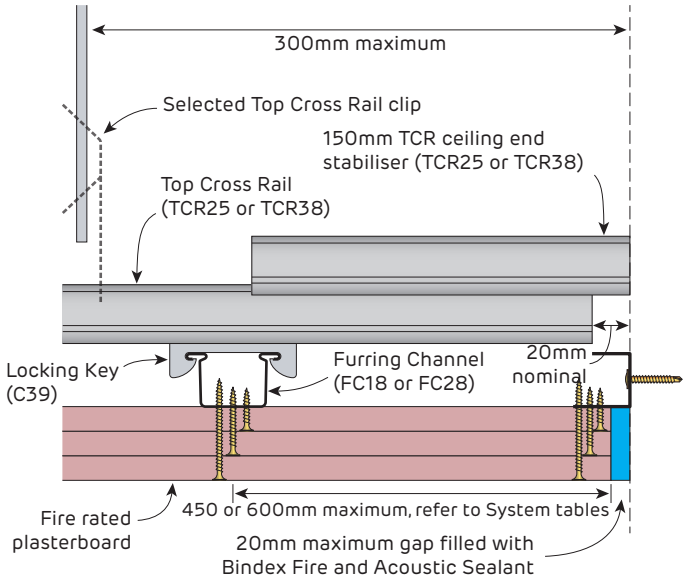

FIGURE 39 Suspended Ceiling
Perimeter detail for fire and acoustic integrity Section

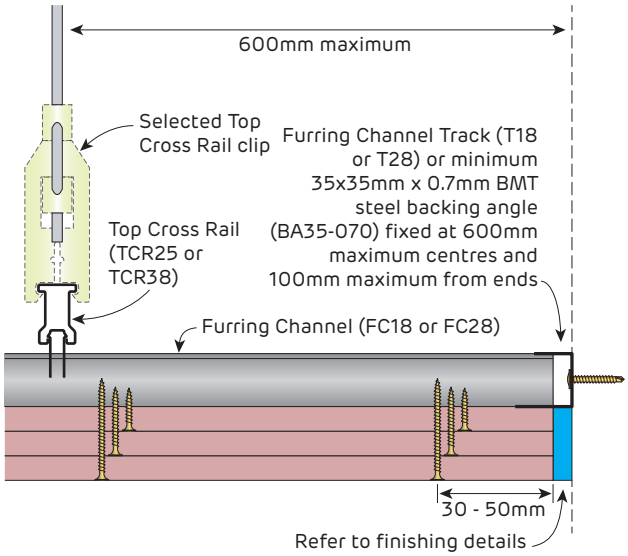

FIGURE 40 Suspended Ceiling
Perimeter detail for fire and acoustic integrity Section

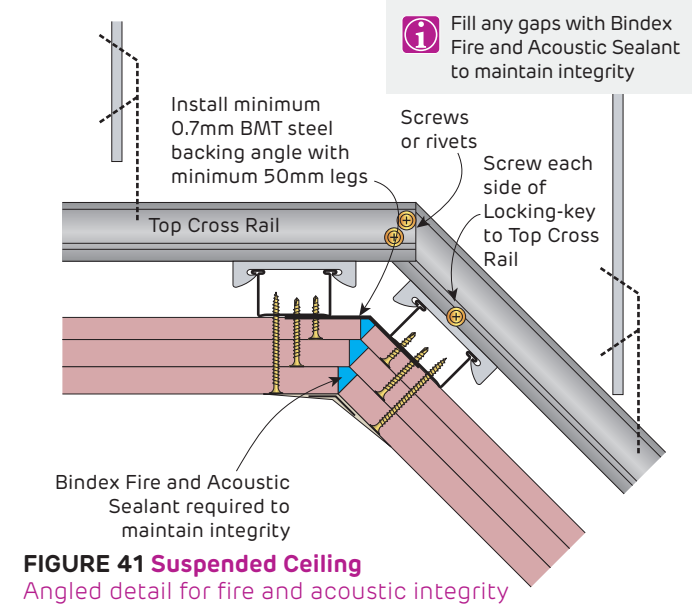

FIGURE 41 Suspended Ceiling
Angled detail for fire and acoustic integrity Section

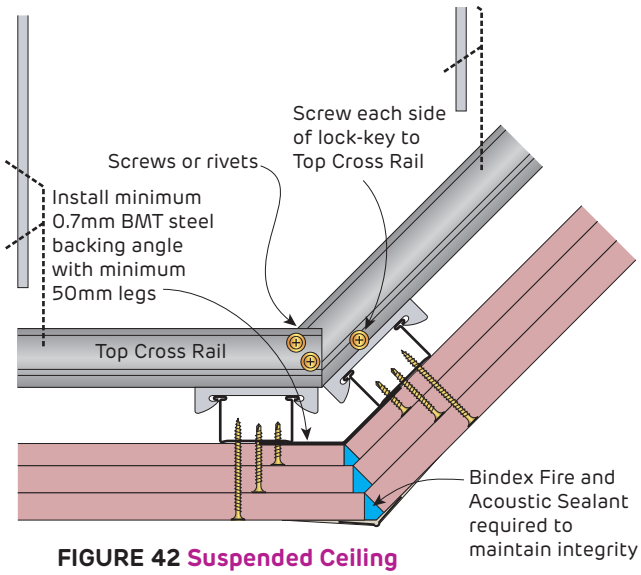

FIGURE 42 Suspended Ceiling
Angled detail for fire and acoustic integrity Section

Fire Rated and Non-Fire Rated
Internal Suspended Ceiling Frames

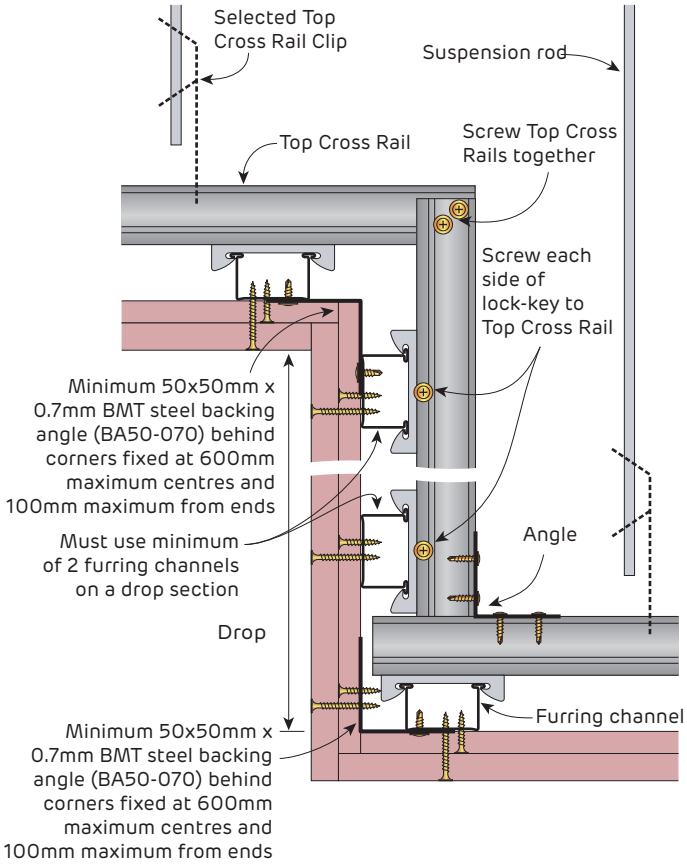

FIGURE 43 Suspended Ceiling
Bulkhead detail
Section

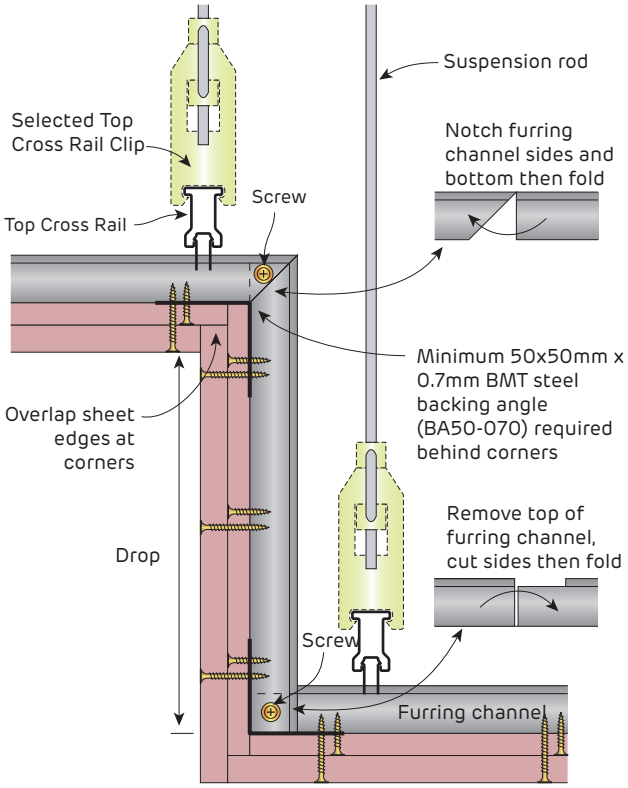

FIGURE 44 Suspended Ceiling
Bulkhead detail
Section

Fire Rated

Internal Suspended Ceiling Under a Fire Rated Ceiling

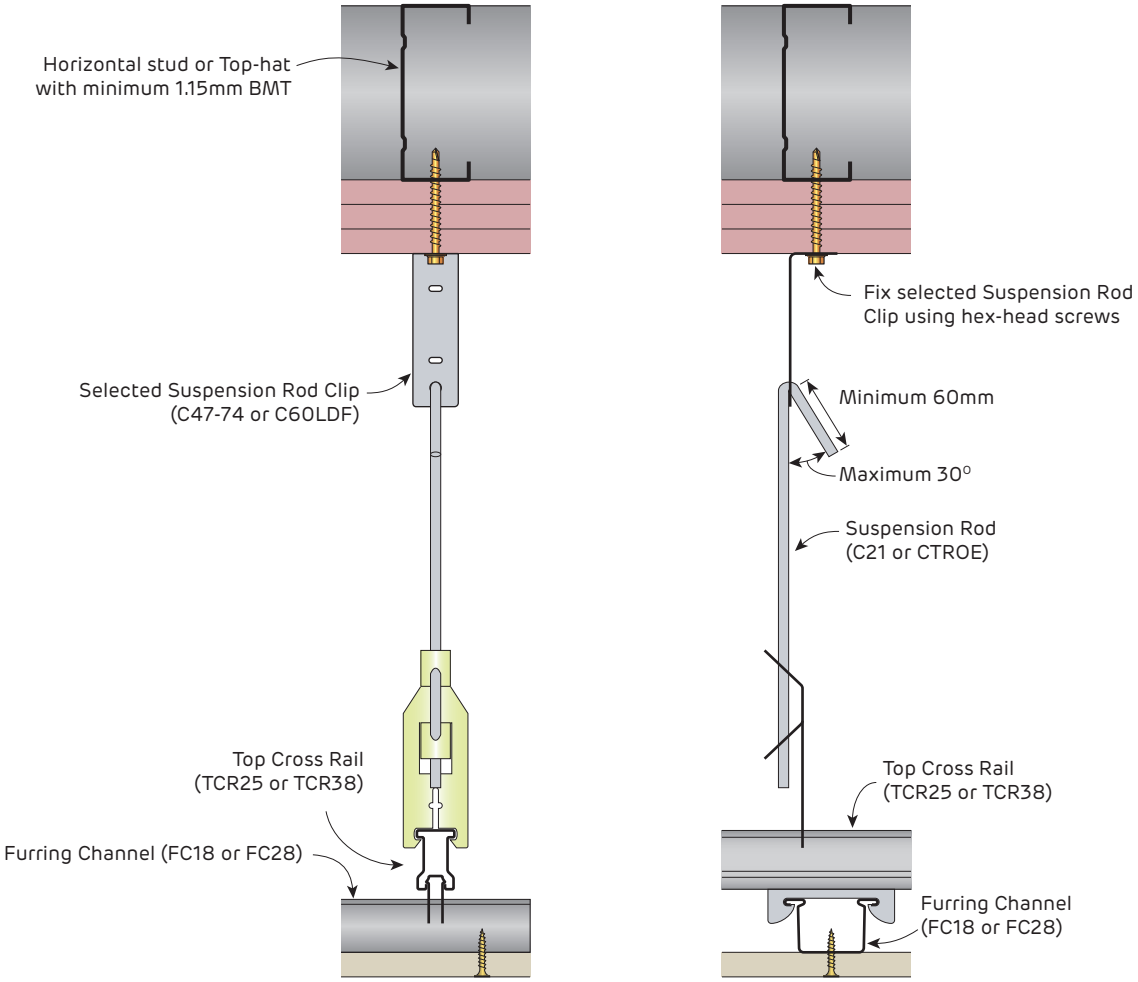

FIGURE 45 Suspended Ceiling under a Fire Rated Ceiling
Section

Non-Fire Rated
Control Joints for Furring Channel Ceilings

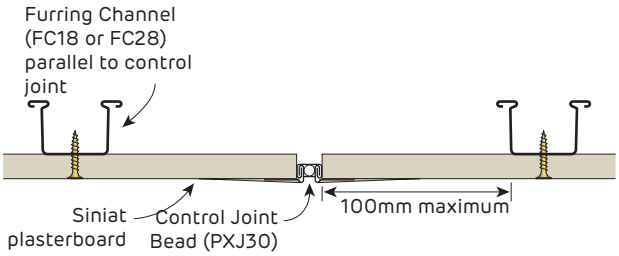

FIGURE 46 Ceiling Control Joint
Parallel to furring channel
Section

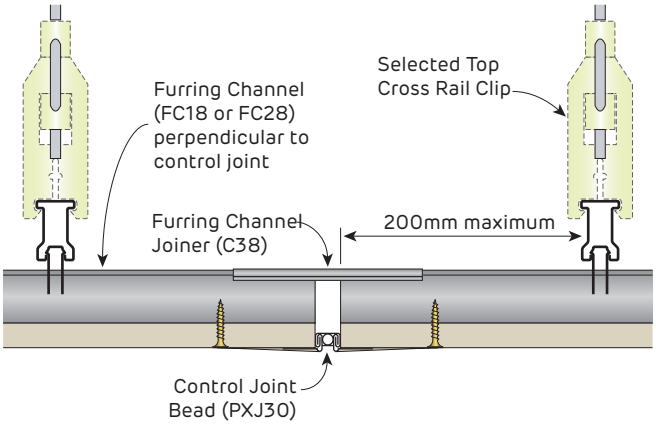

FIGURE 47 Ceiling Control Joint
Perpendicular to furring channel
Section

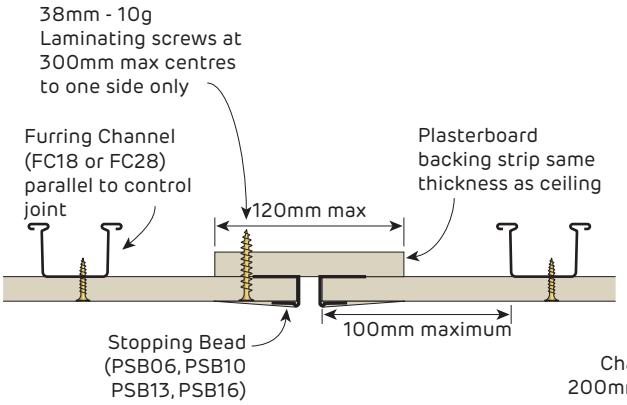

FIGURE 48 Ceiling Control Joint
Parallel to furring channel
Section

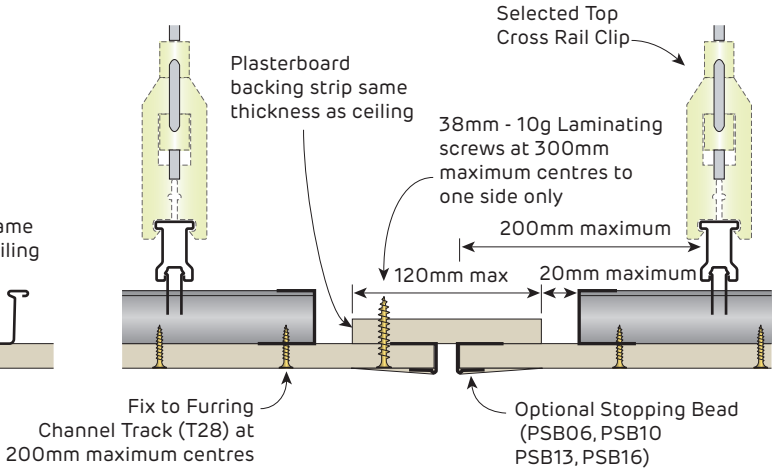

FIGURE 49 Ceiling Control Joint
Perpendicular to furring channel
Section

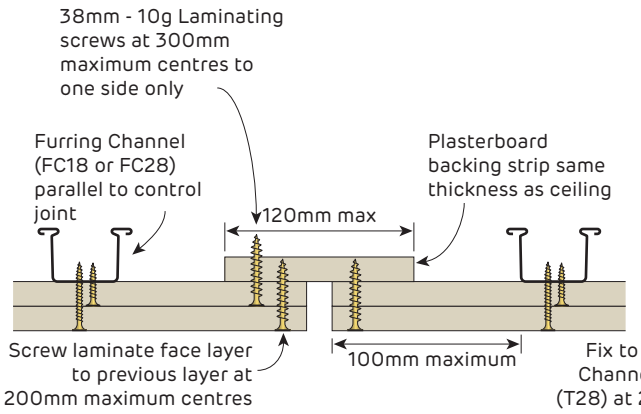

FIGURE 50 Ceiling Control Joint
Parallel to furring channel
Section

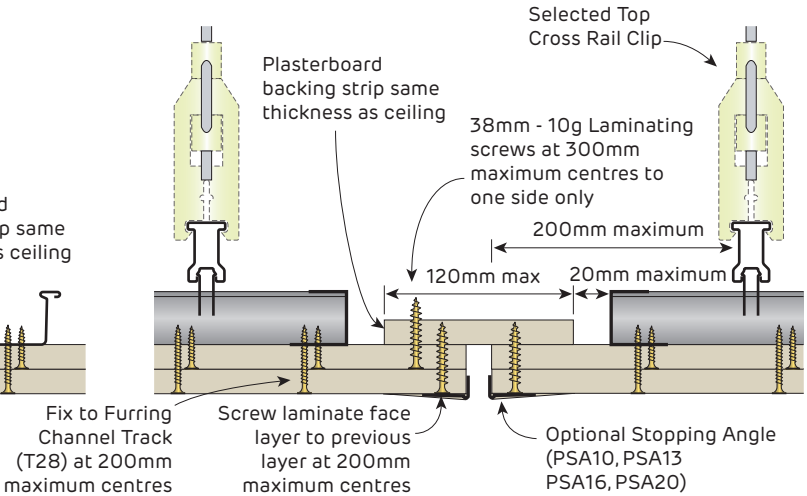

FIGURE 51 Ceiling Control Joint
Perpendicular to furring channel
Section

Fire Rated
Control Joints for Furring Channel Ceilings

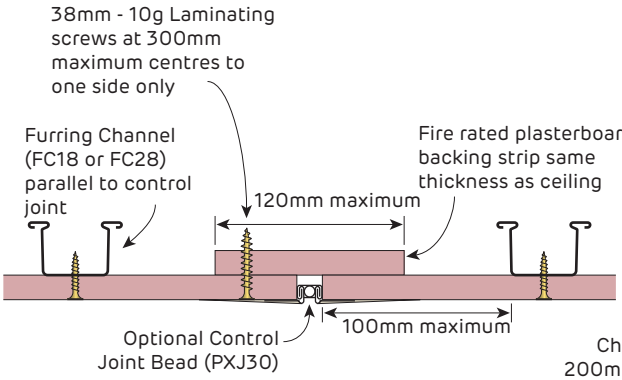

FIGURE 52 Ceiling Control Joint
Parallel to furring channel
Section

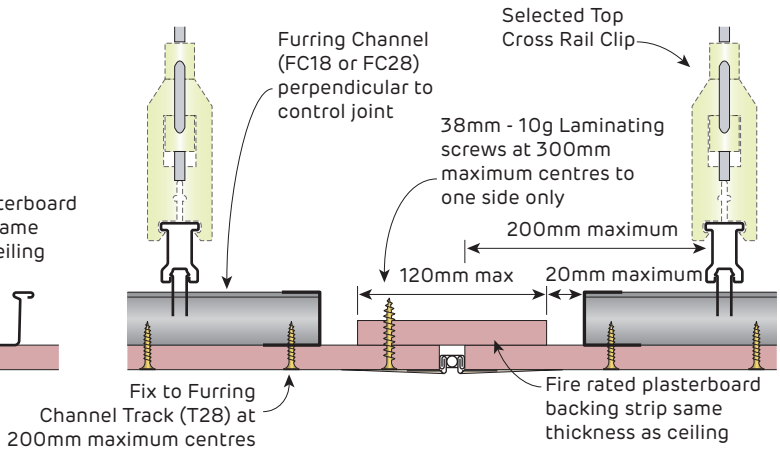

FIGURE 53 Ceiling Control Joint
Perpendicular to furring channel
Section

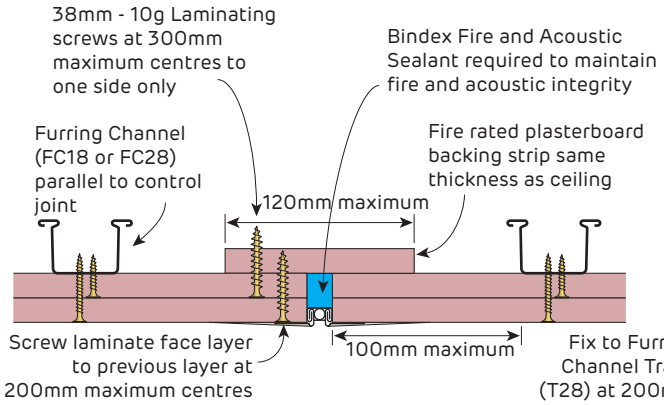

FIGURE 54 Ceiling Control Joint
Parallel to furring channel
Section

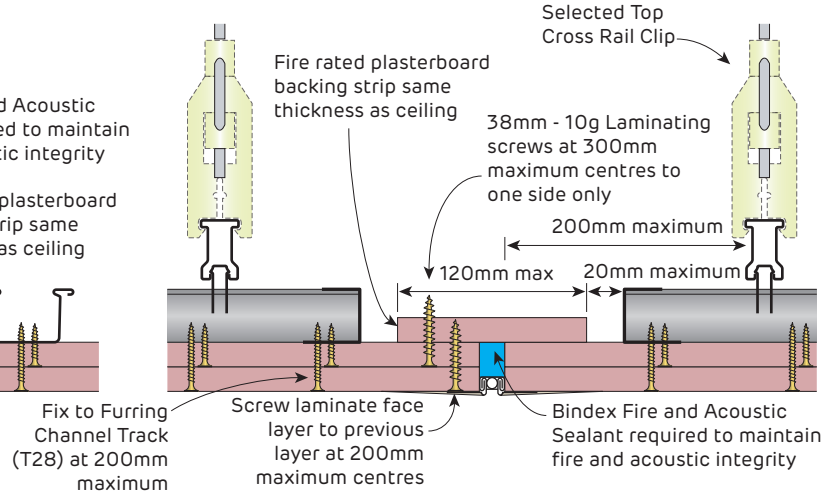

FIGURE 55 Ceiling Control Joint
Perpendicular to furring channel
Section

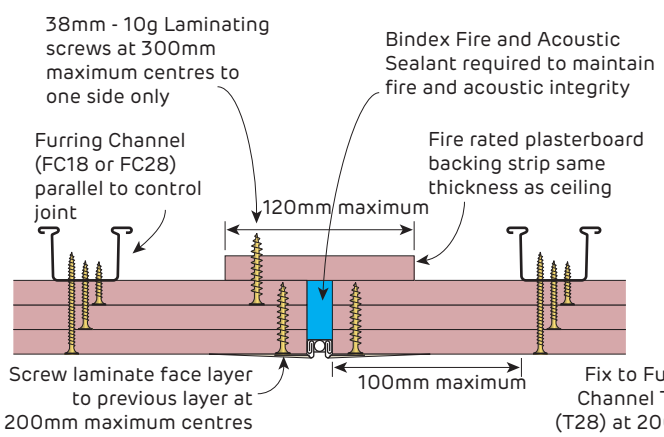

FIGURE 56 Ceiling Control Joint
Parallel to furring channel
Section

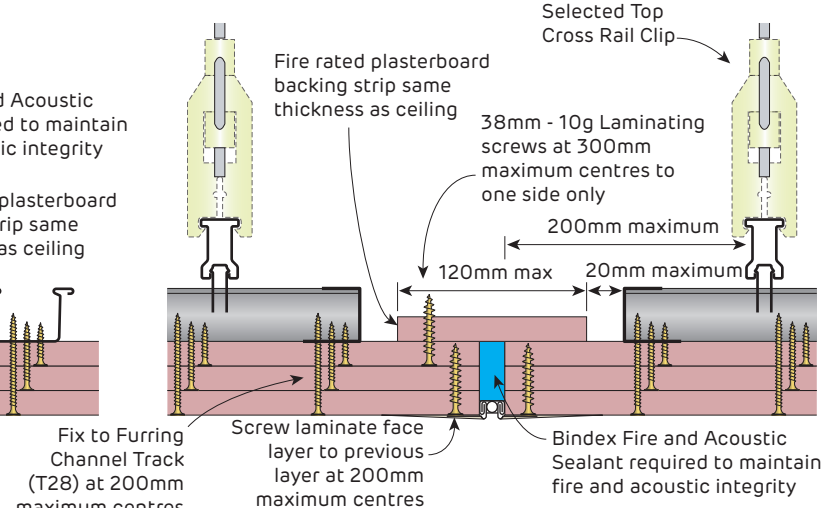

FIGURE 57 Ceiling Control Joint
Perpendicular to furring channel
Section

Fire Rated and Non-Fire Rated
Downstrut

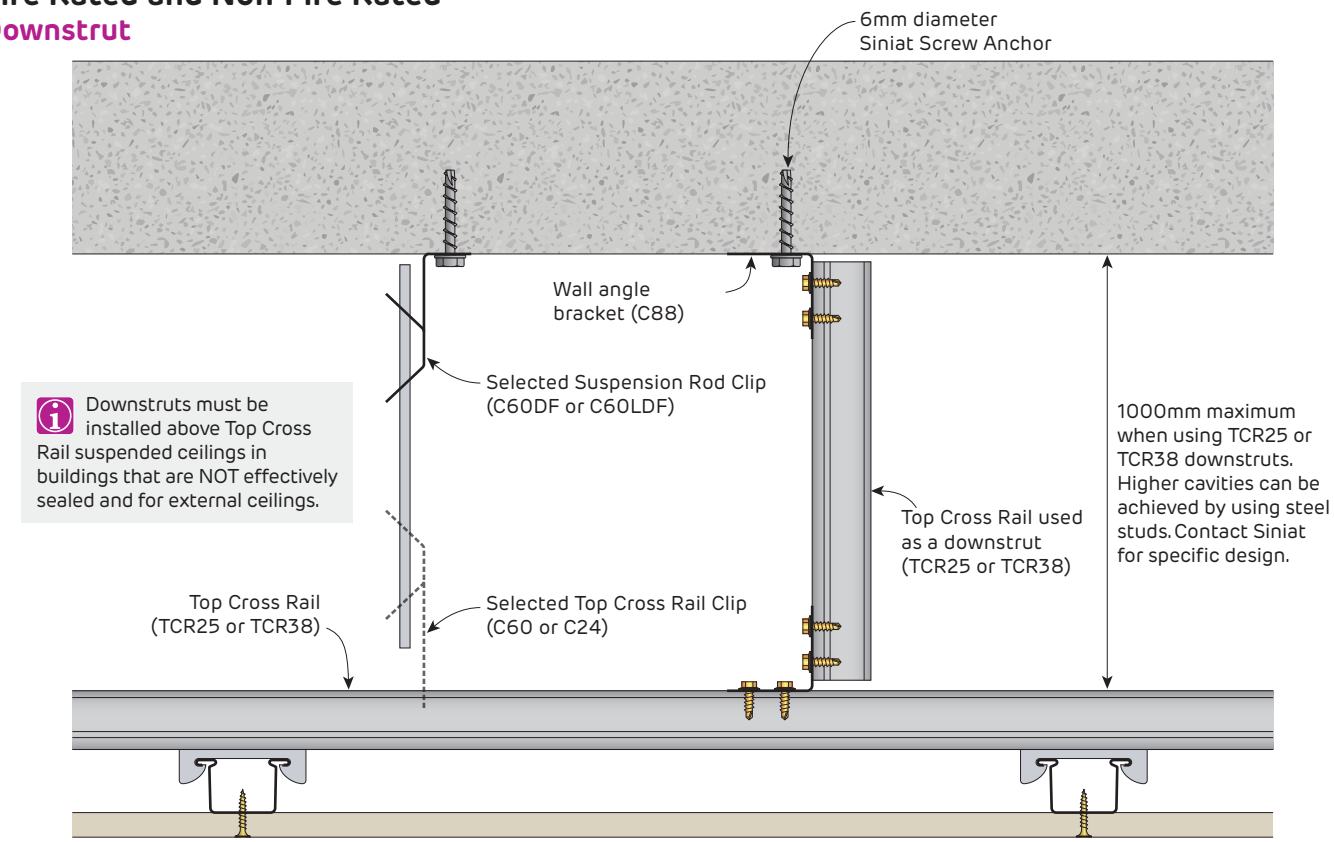

FIGURE 58 Downstrut
Section

Non-Fire Rated
Top Cross Rail Bridging

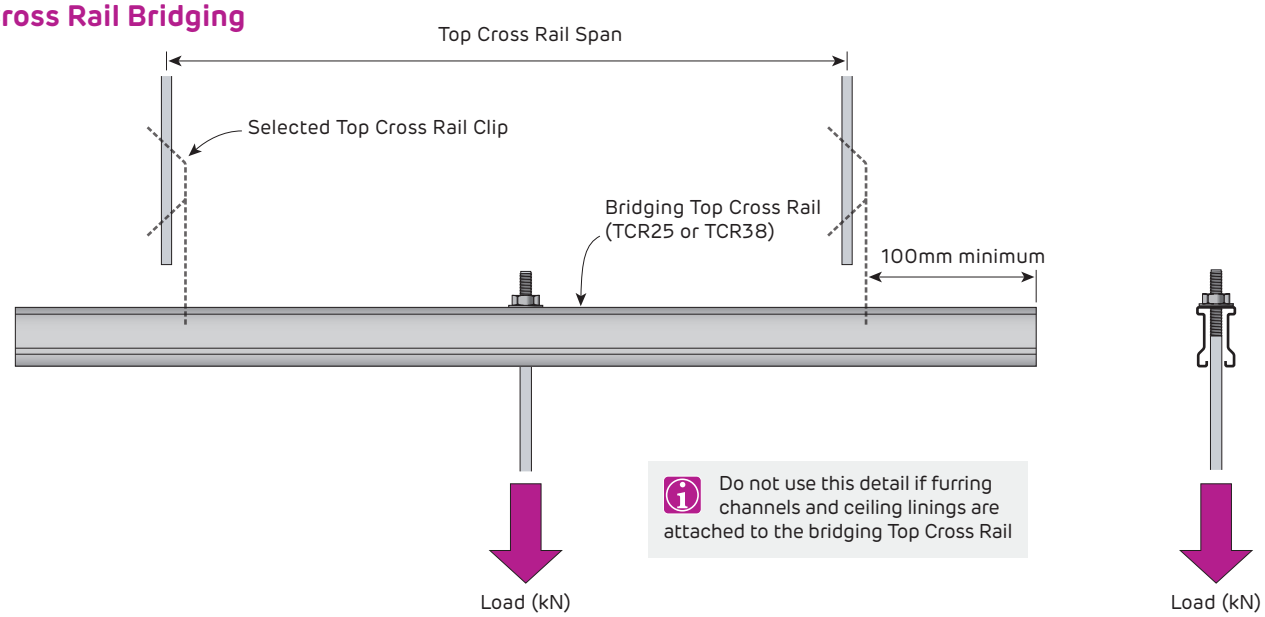

FIGURE 59 Top Cross Rail Bridging
Sections

Top Cross Rail Bridging Table

TCR Span	Maximum Load (kg)	
	TCR25x0.75	TCR38x0.75
600mm	39	75
900mm	17	50
1200mm	10	28
1500mm	6	18
1800mm	-	12

1. Table based upon downward load, intended for internal use only.
2. Maximum load refers only to dead load (G). Other loads such as live, wind, service loads, etc are not included.
3. Tables have not been checked for earthquake actions.
4. Tables refer to Siniat Top Cross Rails of Base Metal Thickness (BMT) 0.75mm of grade G300 steel with Zincalume™ AM150 corrosion protection.
5. Calculations based upon a single span, and designed in accordance with *AS/NZS 4600:2018 Cold Formed Steel Structures*.
6. Connections to clips must be checked with the clip capacity table.
Ultimate Limit State Load Case 1: 1.4G
8. Serviceability Limit State Load Case 1: G, with deflection limited to Span/360
9. The project engineer must approve the nominated load and deflection limits are appropriate for a specific project.

Non-Fire Rated

Ceiling Perimeter Finishing Details

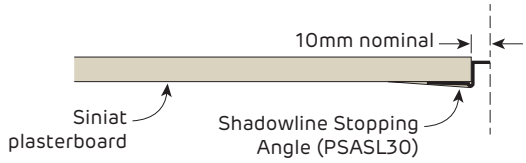

FIGURE 60 Finishing Detail - Shadowline
Section

Some damage to ceiling linings for finishing details with low tolerance to movement can be expected in a Serviceability Earthquake event.

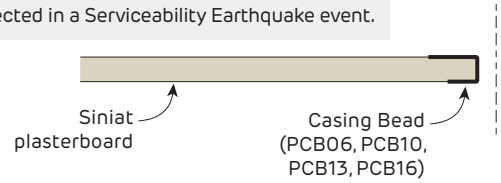

FIGURE 61 Finishing Detail - Casing Bead
Section

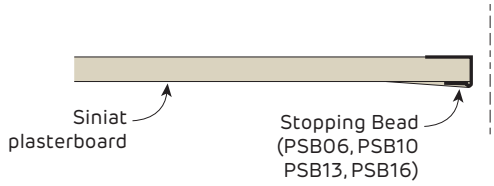

FIGURE 62 Finishing Detail - Stopping Bead
Section

Gaps around the ceiling perimeter may reduce acoustic performance

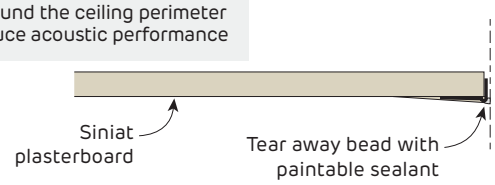

FIGURE 63 Finishing Detail - Square Set
Section

Fire Rated and Non-Fire Rated

Ceiling Perimeter Finishing Details

Ceilings using a square set finishing detail have low tolerance for building movement and are more prone to cracking and joint peaking

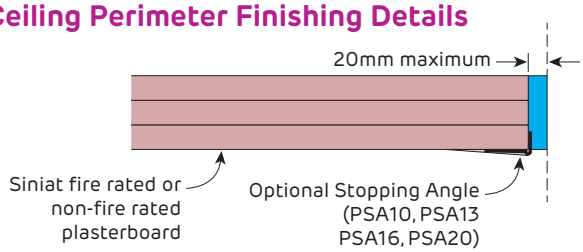

FIGURE 64 Finishing Detail - Stopping Angle
Valid for 1 to 4 layers
Section

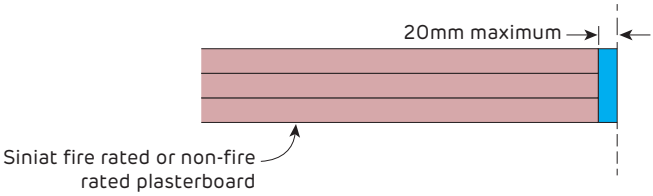

FIGURE 65 Finishing Detail - Bare finish with Sealant
Valid for 1 to 4 layers
Section

Not suitable for single layer ceiling

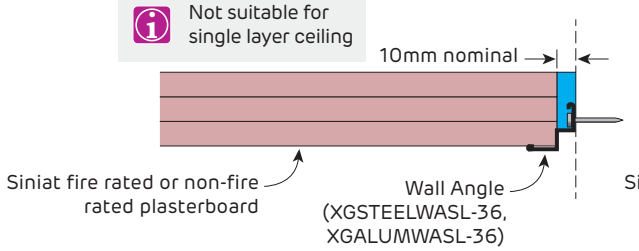

FIGURE 66 Finishing Detail - Shadowline Wall Angle
Valid for 2 to 4 layers only
Section

Not suitable for single layer ceiling

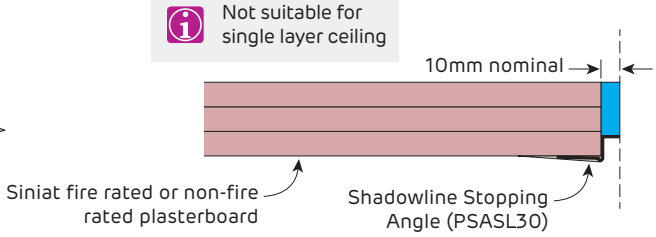

FIGURE 67 Finishing Detail - Shadowline
Valid for 2 to 4 layers only
Section

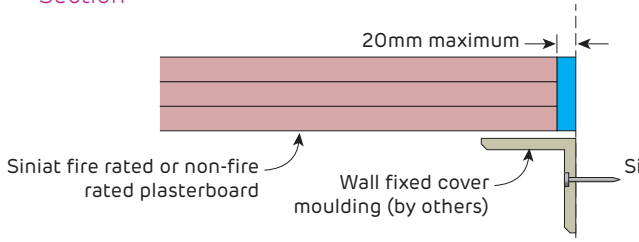

FIGURE 68 Finishing Detail - Wall Cover Moulding
Valid for 1 to 4 layers
Section

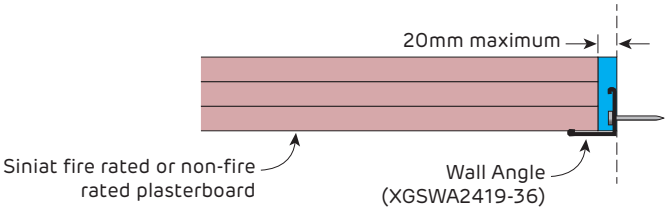

FIGURE 69 Finishing Detail - Wall Angle
Valid for 1 to 4 layers
Section

Some damage to ceiling linings for finishing details with low tolerance to movement can be expected in a Serviceability Earthquake event.

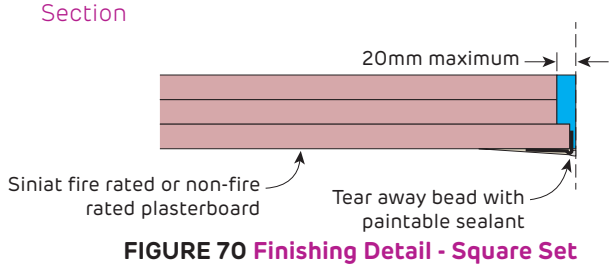

FIGURE 70 Finishing Detail - Square Set
Valid for 1 to 4 layers
Section

Ceilings using a square set finishing detail have low tolerance for building movement and are more prone to cracking and joint peaking

Fire Rated
Fire Penetration Details

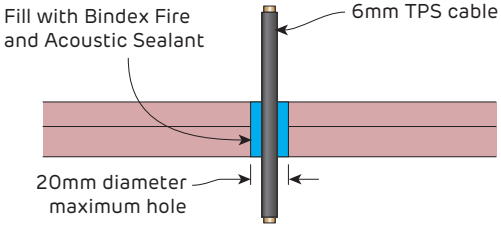

FIGURE 71 TPS cable
Maintains RISF and FRL of ceiling under floor/roof systems
Valid for 2 to 4 layers only
Section

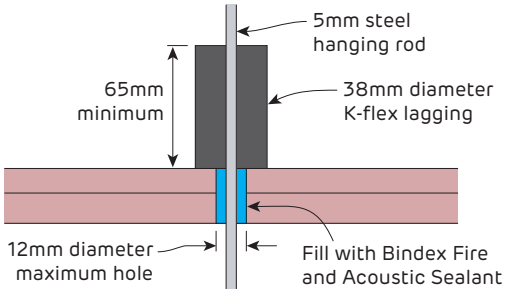

FIGURE 72 5mm steel rod
Maintains RISF and FRL of ceiling under floor/roof systems
Valid for 2 to 4 layers only
Section

Fire Rated
Light Fitting Details

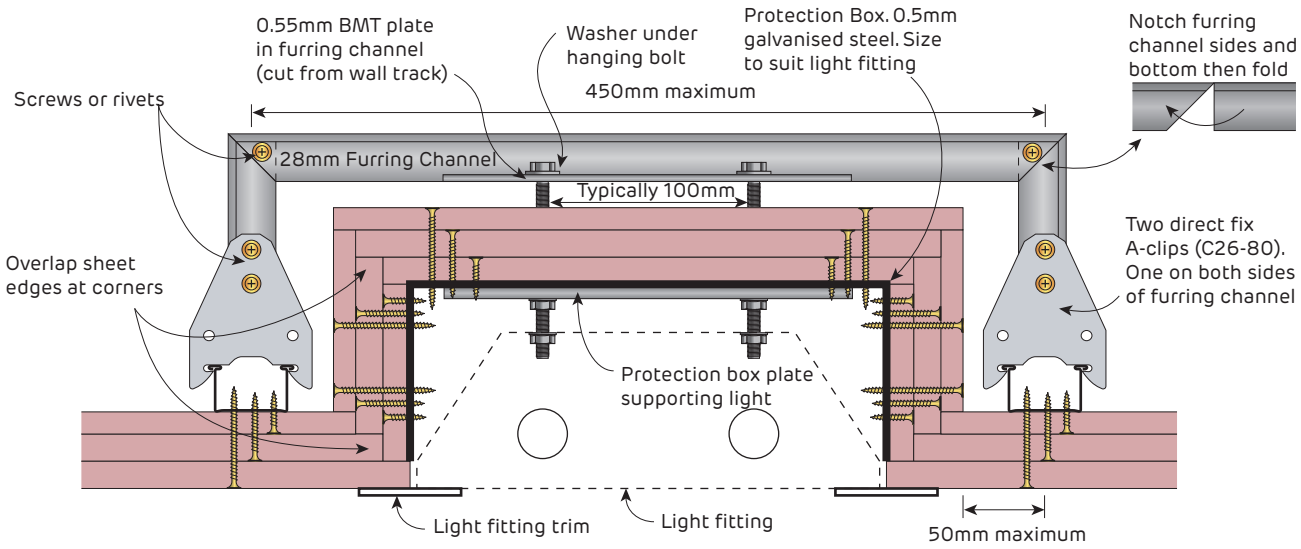

FIGURE 73 Typical Recessed Light Fitting
Maintains FRL of ceiling
Section

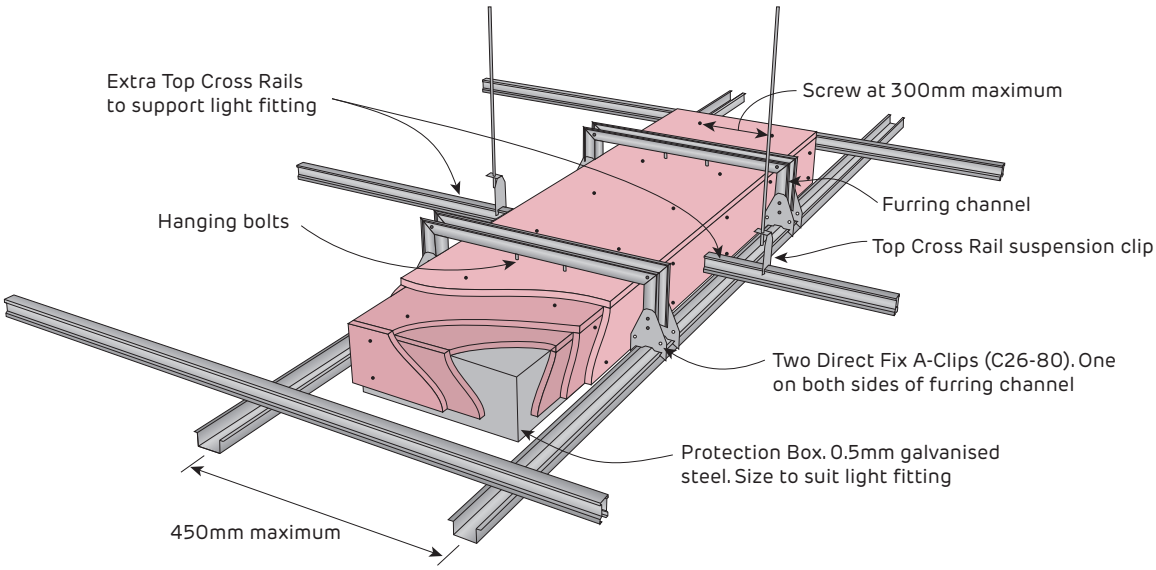

FIGURE 74 Typical Recessed Light Fitting
Maintains FRL of ceiling
Perspective

Fire Rated
Light Fitting Details

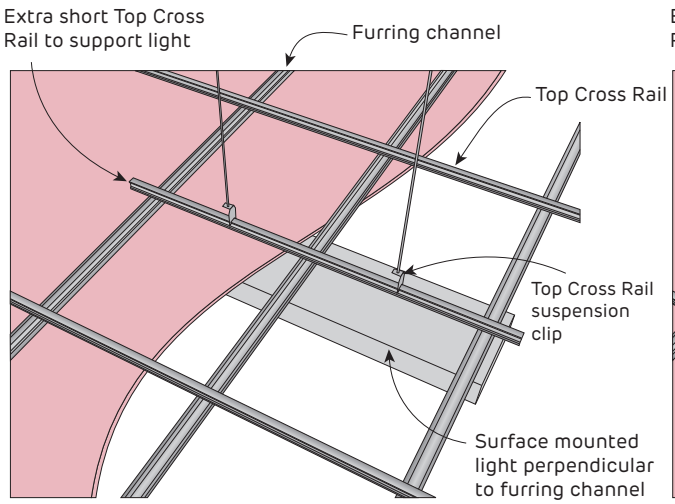

FIGURE 75 Surface Light Fitting
Perspective

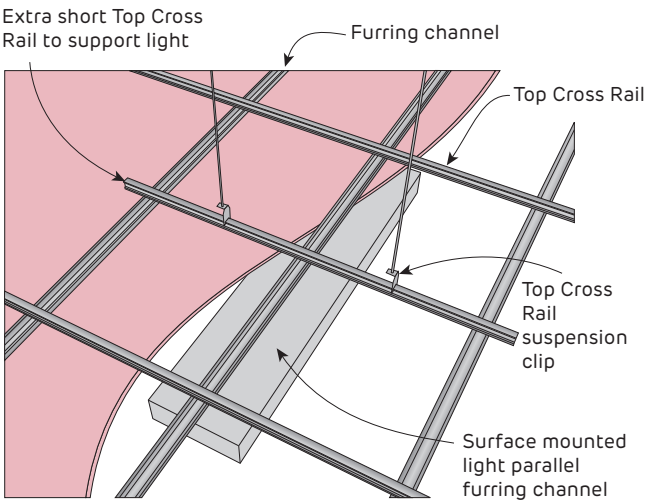

FIGURE 76 Surface Light Fitting
Perspective

Fire Rated
Inspection Hatch Detail

Refer to ceiling inspection hatch manufacturer for correct installation detail.

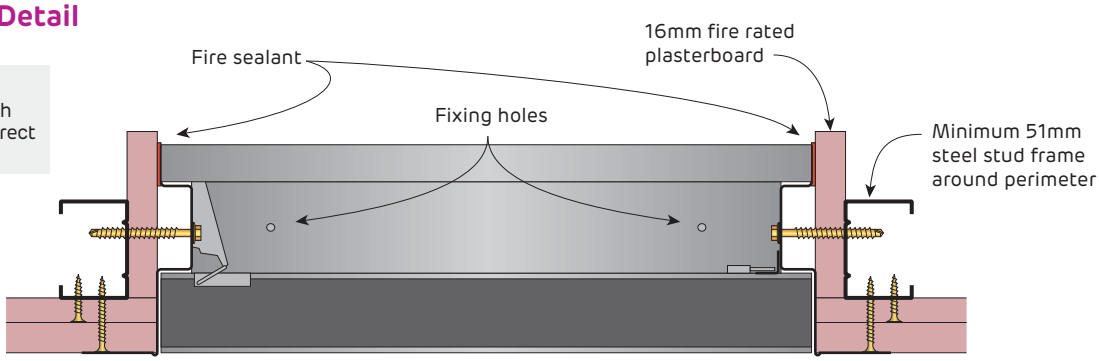

FIGURE 77 Typical FRL –/60/60 Ceiling Inspection Hatch
Example only
Section

Fire Rated
Fire Damper Detail

Refer to fire damper manufacturer for correct installation detail.

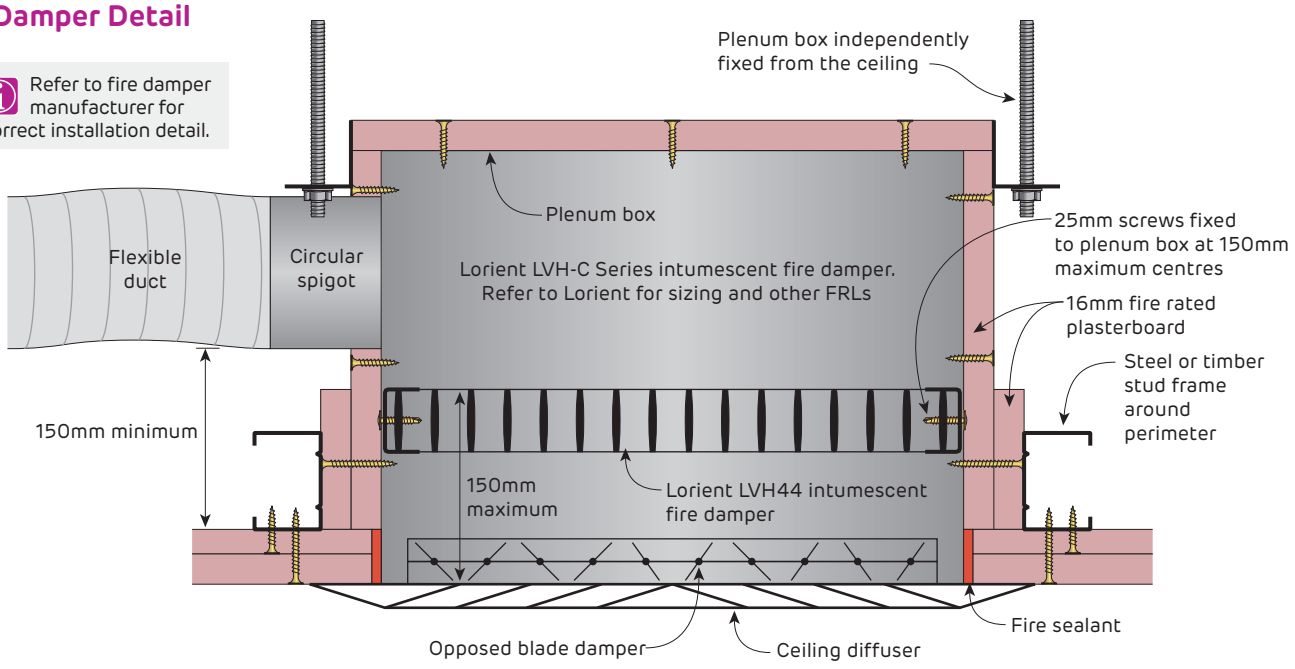

FIGURE 78 FRL –/60/60 + RISF Ceiling Fire Damper
Example only
Section

Fire Rated

Flush Patching of Fire Rated Ceiling Systems - Maximum 300x300mm Opening

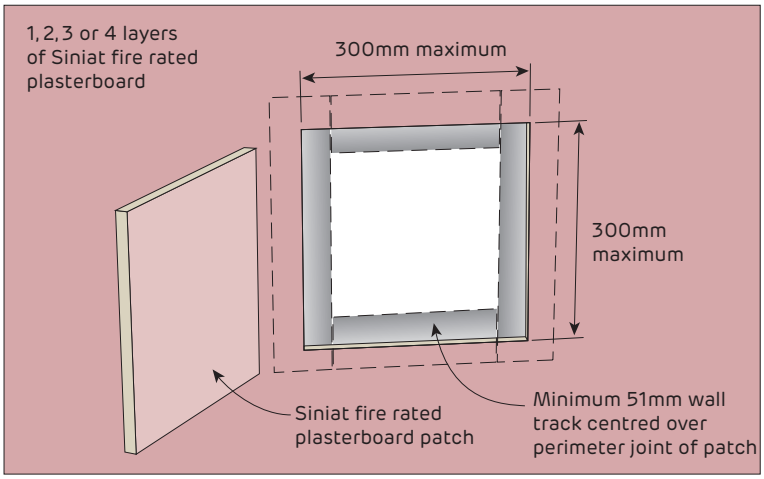

Step 1

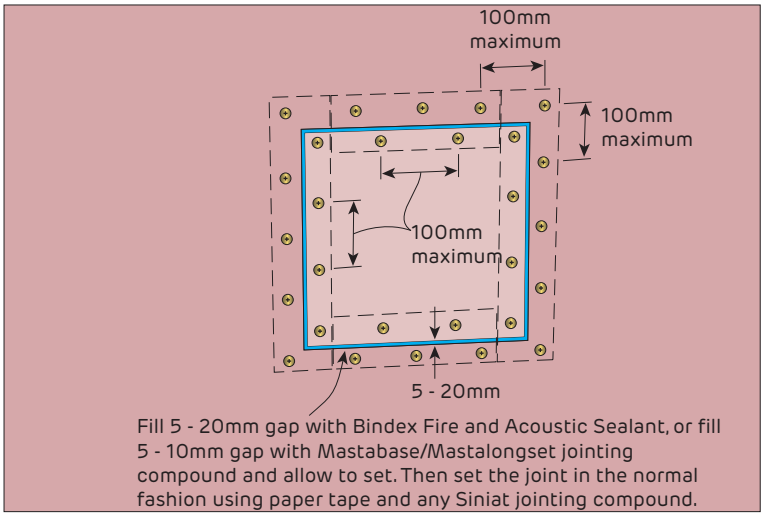

Step 2

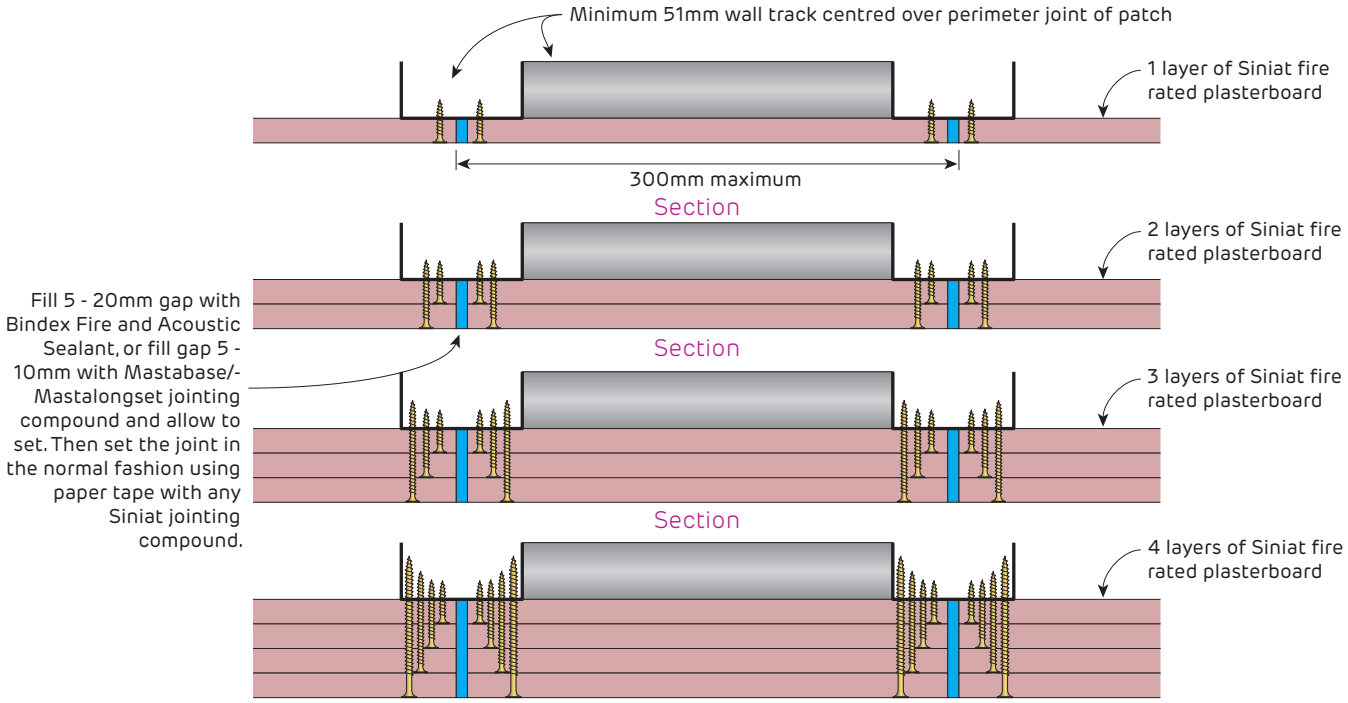

FIGURE 79 Flush patch
Maximum 300x300mm opening
Maintains FRL of system

Fire Rated

Proud Patching of Fire Rated Ceiling Systems - Maximum 300x300mm Opening

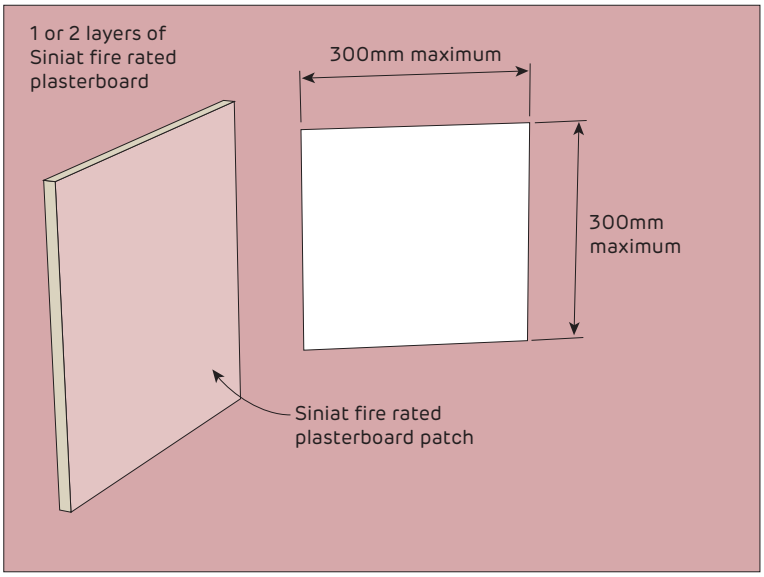

Step 1

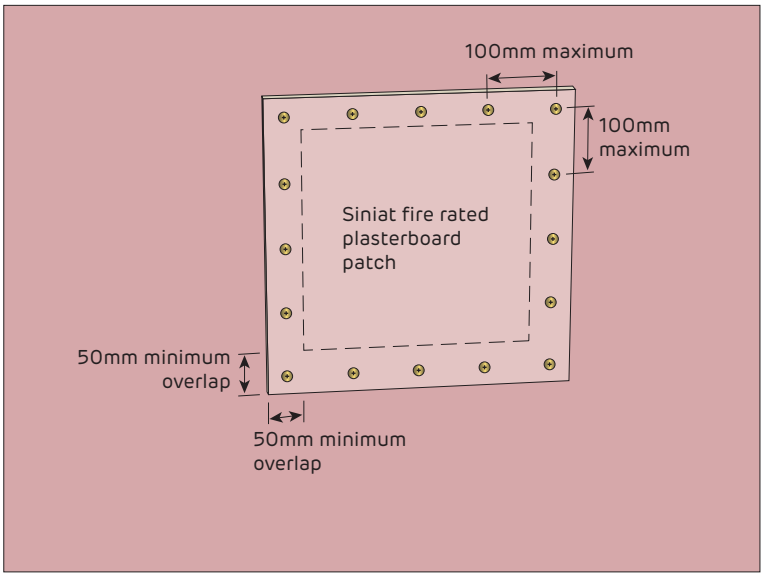

Step 2

Fire rated plasterboard patch must be the same thickness and number of layers as the base fire rated system

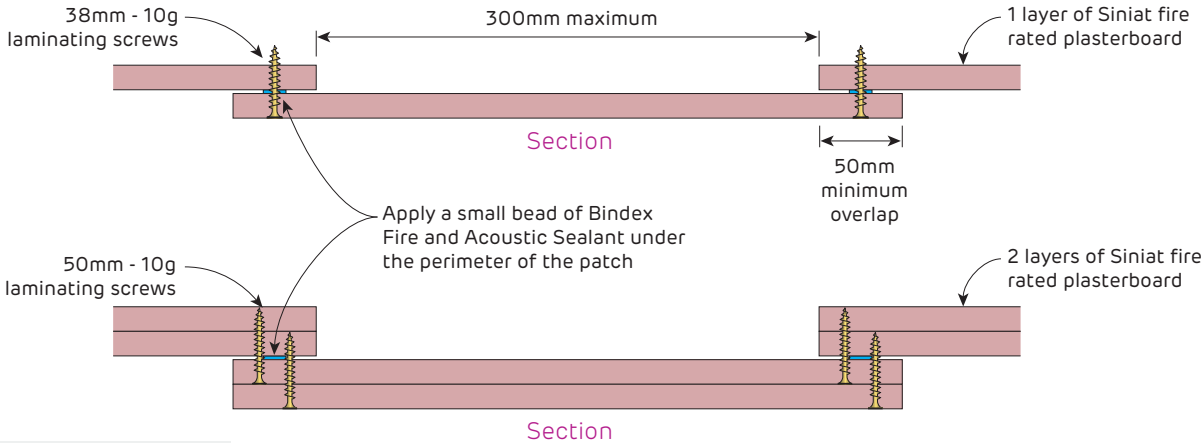

Fill any gaps with Bindex Fire and Acoustic sealant to maintain integrity

FIGURE 80 Proud patch
Maximum 300x300mm opening

Fire Rated

Proud Patching of Fire Rated Ceiling Systems - Larger Openings

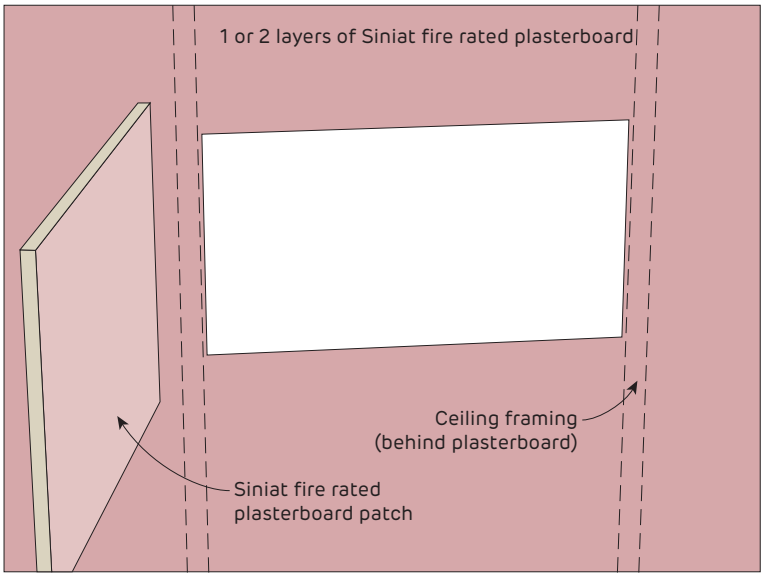

Step 1

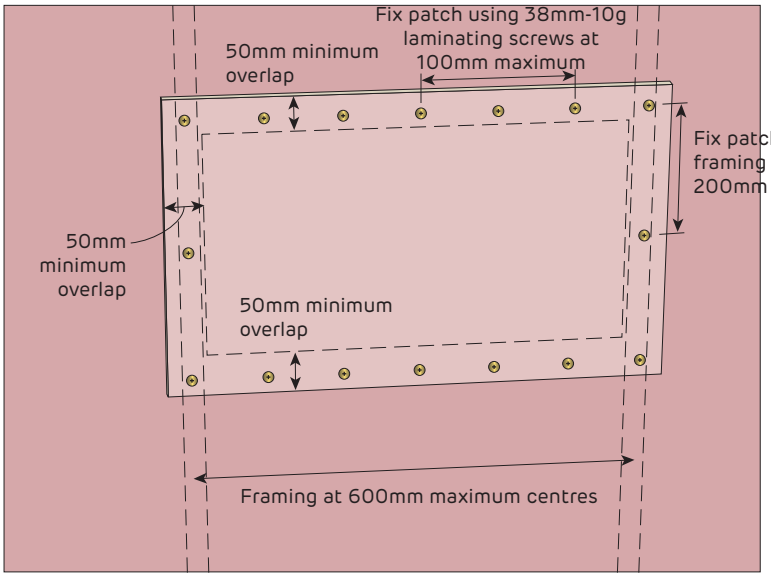

Step 2

To repair a fire rated ceiling with holes larger than 300mm x 300mm and achieve a flush finish; follow the normal installation instructions to re-instate the system.

Fire rated plasterboard patch must be the same thickness and number of layers as the base fire rated system

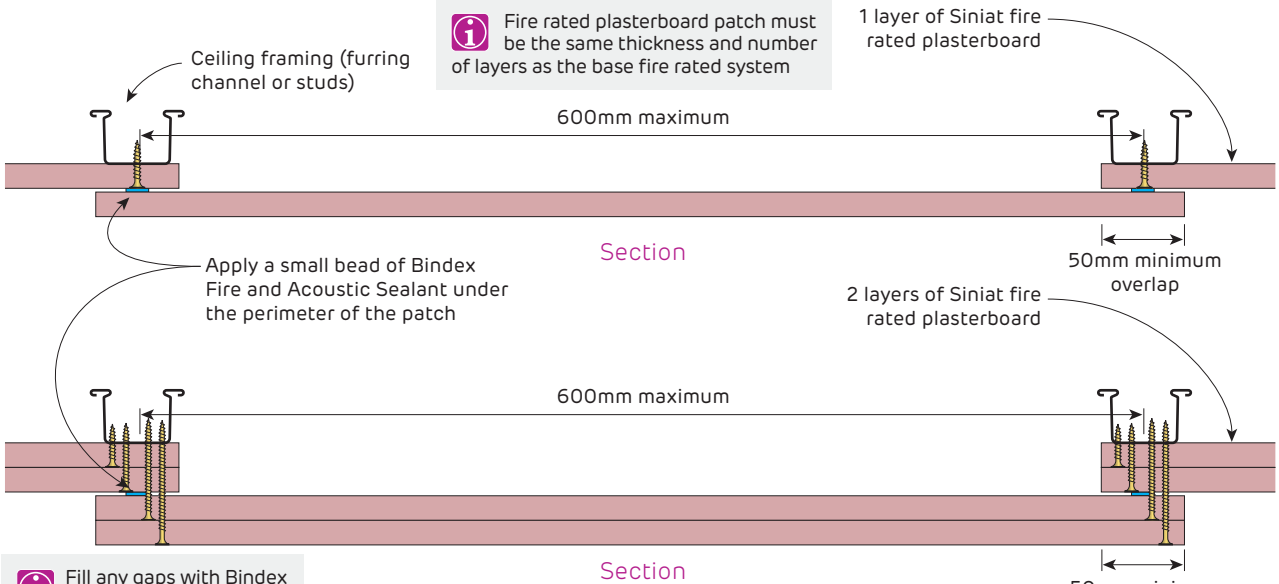

Fill any gaps with Bindex Fire and Acoustic sealant to maintain integrity

FIGURE 81 Proud patch for larger openings
For openings larger than 300x300mm

Fire Rated
Patching of Fire Rated Ceiling Systems

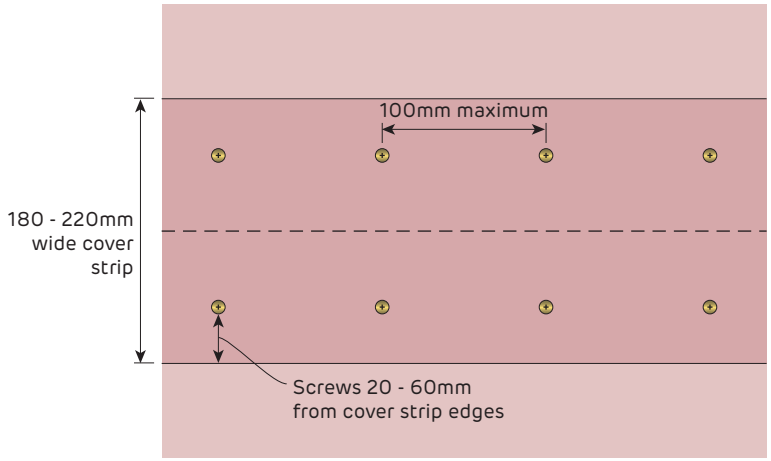

Ceiling Joint

Cover strip over a fire rated plasterboard joint can compensate for:
- Joints not staggered in accordance with Siniat Technical Literature
- Use of fibre glass tape
- Incorrect jointing or no jointing material used.

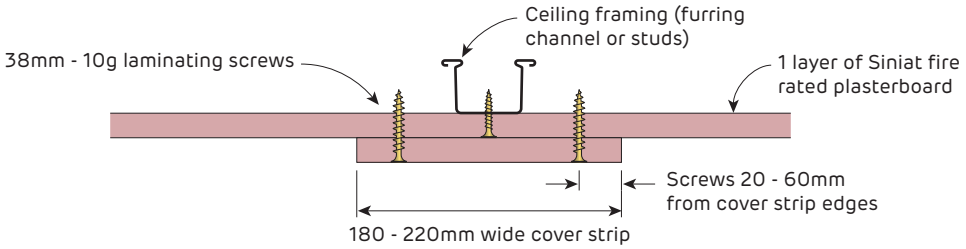

Plan

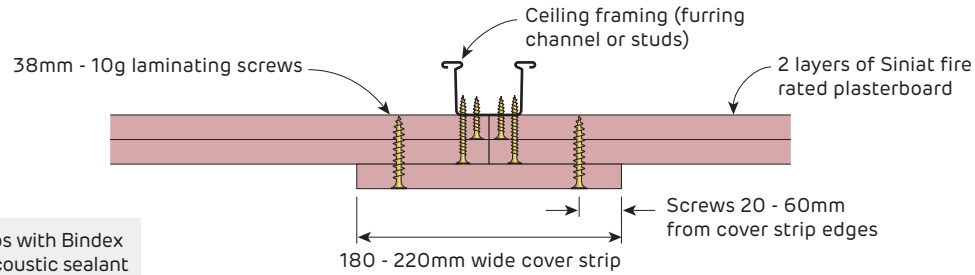

Plan

Fill any gaps with Bindex Fire and Acoustic sealant to maintain integrity

FIGURE 82 Cover Strip



5.2 Ceiling Attenuation Class Systems

Ceiling Attenuation Class (CAC) ceiling systems display resistance to sound passing up and over a wall. The sound insulation rating given for the ceiling system indicates the sound reduction from one room to the next via the two ceilings and the above-ceiling plenum.

Rather than introduce another term to building designers such as CAC, the more familiar terms Rw and Rw + Ctr are used. CAC systems without a central barrier must have a maximum of 1 downlight every 5 m^2 and other penetrations acoustically treated in the rooms adjacent to the wall are required to maintain sound insulation performance.

Refer to Section 5.1 for ceiling to wall finishing details.

CAC1 - CAC28

[Option 1] Suspended ceiling frame with set plasterboard ceiling
[Option 2] Suspended T-bar exposed grid frame with ceiling tiles for system CAC1

[All systems are suitable under a concrete slab, timber roof framing or steel roof framing]
[Sound insulation numbers based on minimum 300mm cavity]
[Penetrations in ceiling lining may degrade sound insulation performance]
[Wall to have equal or higher sound insulation rating than CAC ceiling]

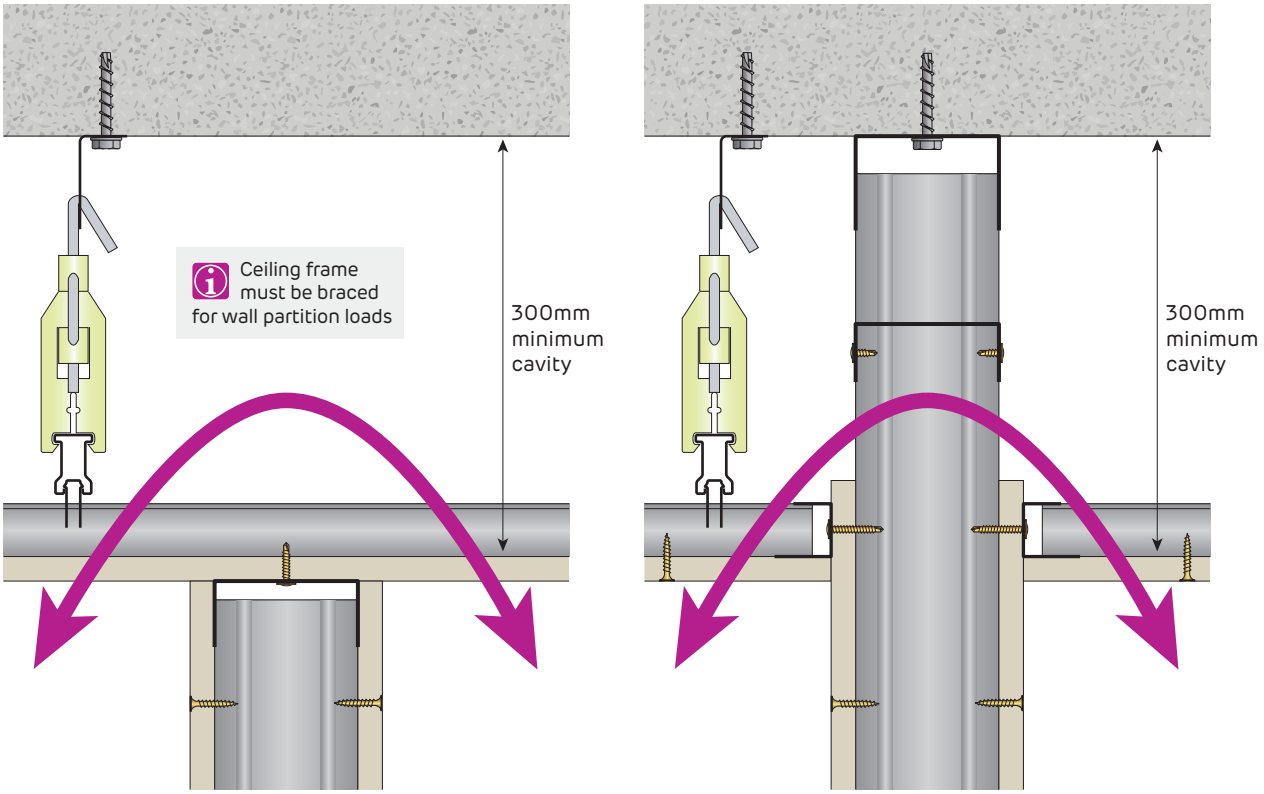

System	Ceiling Lining	Airborne Sound Insulation Rw (Rw + Ctr)			
		No Insulation	Pink® Partition 50mm 11 kg/m³ R1.2 insulation above ceiling to 1200mm both sides of wall	Pink® Partition 50mm 11 kg/m³ R1.2 insulation over entire ceiling	
CAC1	10mm **span**grid ceiling tiles in exposed grid	36 (30)	41 (35)	43 (37)	Report Day Design 4738-5
CAC10	1 layer of 10mm **masta**shield or **span**shield	38 (32)	43 (36)	45 (38)	
CAC11	2 layers of 10mm **masta**shield or **span**shield	43 (37)	47 (41)	48 (42)	
CAC14	1 layer of 13mm **masta**shield	41 (34)	45 (38)	47 (40)	
CAC16	1 layer of 10mm **sound**shield or **opal**	41 (34)	45 (38)	47 (40)	
CAC17	2 layers of 10mm **sound**shield or **opal**	44 (38)	48 (42)	49 (43)	
CAC18	1 layer of 13mm **sound**shield	43 (36)	47 (40)	48 (41)	
CAC19	2 layers of 13mm **sound**shield	49 (42)	52 (45)	52 (45)	
CAC20	1 layer of 13mm **fire**shield	43 (36)	47 (40)	48 (41)	
CAC22	1 layer of 16mm **fire**shield	43 (36)	47 (40)	48 (41)	
CAC23	1 layer of 13mm **fire**shield plus 1 layer of 16mm **fire**shield	49 (42)	52 (45)	52 (45)	
CAC24	2 layers of 16mm **fire**shield	49 (42)	52 (45)	52 (45)	
CAC26	3 layers of 13mm **fire**shield	51 (44)	53 (46)	53 (46)	
CAC27	1 layer of 13mm **fire**shield plus 2 layers of 16mm **fire**shield	51 (44)	53 (46)	53 (46)	
CAC28	3 layers of 16mm **fire**shield	51 (44)	53 (46)	53 (46)	

For more information on Pink® Partition batts please refer to Section 2.1 - Insulation.

CAC120 - CAC128

- Set plasterboard ceiling divided by discontinuous wall frames and discontinuous timber or steel joists or trusses

[Maintains RISF 60 when using an RISF 60 minute ceiling]
[Double stud wall timber or steel frame with minimum 20mm air-gap]
[All systems are suitable under roof or floor with timber or steel framing]
[Sound insulation numbers based on minimum 300mm cavity]
[Penetrations in ceiling lining may degrade sound insulation performance]
[Wall to have equal or higher sound insulation rating than CAC ceiling]

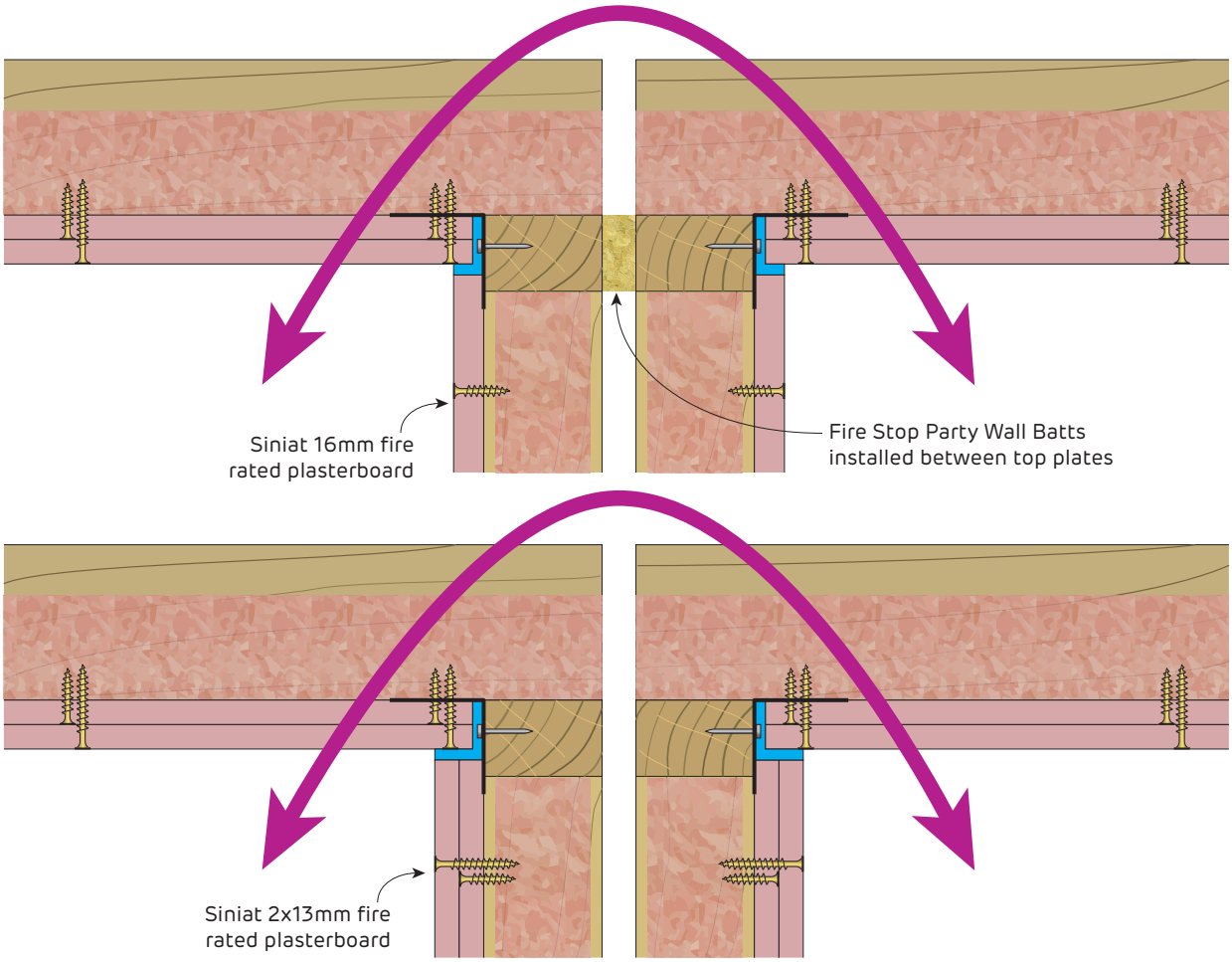

System	Ceiling Lining	Airborne Sound Insulation Rw (Rw + Ctr)			
		No Insulation	Pink® Partition 50mm 11 kg/m³ R1.2 insulation above ceiling to 1200mm both sides of wall	Pink® Partition 50mm 11 kg/m³ R1.2 insulation over entire ceiling	
CAC120	1 layer of 13mm **fire**shield	49 (43)	54 (46)	56 (48)	Report Day Design 4738-5
CAC121	2 layers of 13mm **fire**shield	52 (45)	58 (58)	59 (**50**)	
CAC122	1 layer of 16mm **fire**shield	42 (43)	55 (46)	56 (48)	
CAC123	1 layer of 13mm **fire**shield plus 1 layer of 16mm **fire**shield	52 (45)	58 (48)	59 (**50**)	
CAC124	2 layers of 16mm **fire**shield	52 (45)	58 (48)	59 (**50**)	
CAC126	3 layers of 13mm **fire**shield	51 (46)	59 (49)	60 (**50**)	
CAC127	1 layer of 13mm **fire**shield plus 2 layers of 16mm **fire**shield	56 (47)	59 (**50**)	60 (**50**)	
CAC128	3 layers of 16mm **fire**shield	56 (48)	59 (**51**)	60 (**50**)	

For more information on Pink® Partition batts please refer to Section 2.1 - Insulation.

CAC3 - CAC48

- [Ceiling Option 1] Suspended ceiling frame with set plasterboard ceiling
  [Ceiling Option 2] Suspended T-bar exposed grid frame with ceiling tiles for system CAC3

- [Above Ceiling Option 1] 10mm minimum plasterboard on one side of stud only, continued up to concrete slab or roof lining [Above Ceiling Option 2] 10mm minimum plasterboard fixed to concrete slab or roof lining with track or angle. Insulation placed above ceiling lining and held in place using track or angle.

[All systems are suitable under a concrete slab, timber roof framing or steel roof framing]
[Sound insulation numbers based on minimum 300mm cavity]
[Wall to have equal or higher sound insulation rating than CAC ceiling]

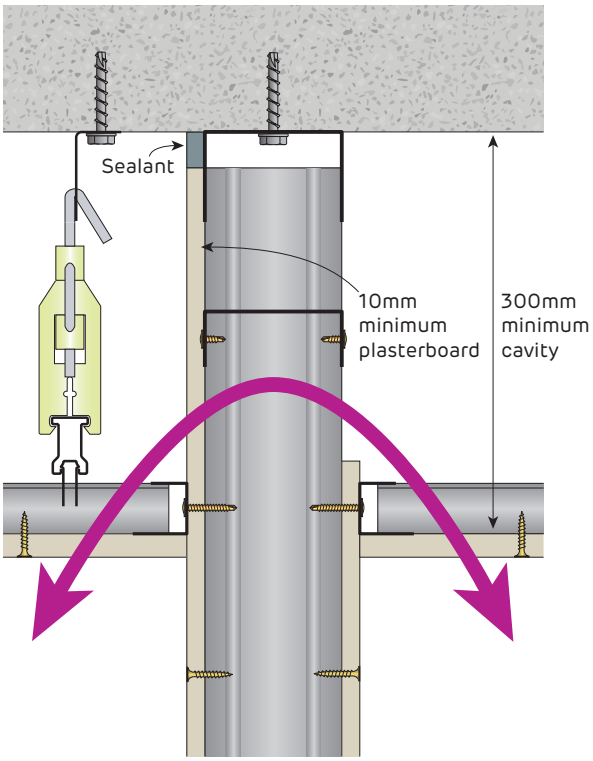

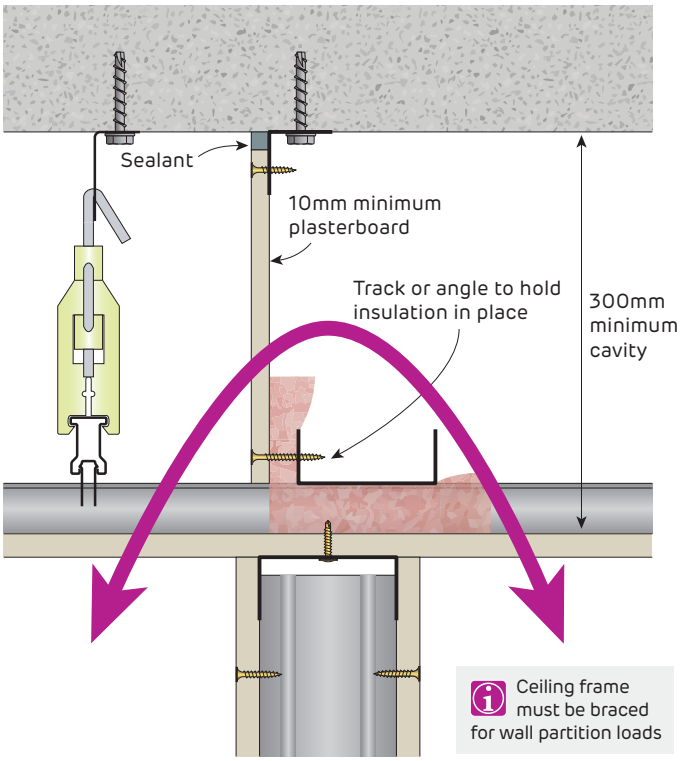

Ceiling frame must be braced for wall partition loads

System	Ceiling Lining	Airborne Sound Insulation Rw (Rw + Ctr)			
		No Insulation	Pink® Partition 50mm 11 kg/m³ R1.2 insulation above ceiling to 1200mm both sides of wall	Pink® Partition 50mm 11 kg/m³ R1.2 insulation over entire ceiling	
CAC3	10mm **span**grid ceiling tiles in exposed grid	41 (35)	46 (40)	48 (42)	Report Day Design 4738-5
CAC30	1 layer of 10mm **masta**shield or **span**shield	45 (37)	50 (42)	52 (44)	
CAC31	2 layers of 10mm **masta**shield or **span**shield	51 (41)	54 (44)	56 (46)	
CAC34	1 layer of 13mm **masta**shield	47 (37)	52 (42)	54 (44)	
CAC36	1 layer of 10mm **sound**shield or **opal**	48 (38)	52 (42)	54 (44)	
CAC37	2 layers of 10mm **sound**shield or **opal**	52 (42)	55 (45)	57 (47)	
CAC38	1 layer of 13mm **sound**shield	49 (39)	53 (43)	55 (45)	
CAC39	2 layers of 13mm **sound**shield	53 (43)	56 (46)	57 (47)	
CAC40	1 layer of 13mm **fire**shield	49 (39)	53 (43)	55 (45)	
CAC42	1 layer of 16mm **fire**shield	50 (40)	54 (44)	56 (46)	
CAC43	1 layer of 13mm **fire**shield plus 1 layer of 16mm **fire**shield	53 (43)	56 (46)	57 (47)	
CAC44	2 layers of 16mm **fire**shield	53 (43)	56 (46)	57 (47)	
CAC46	3 layers of 13mm **fire**shield	55 (45)	57 (47)	58 (48)	
CAC47	1 layer of 13mm **fire**shield plus 2 layers of 16mm **fire**shield	55 (45)	57 (47)	58 (48)	
CAC48	3 layers of 16mm **fire**shield	55 (45)	57 (47)	58 (48)	

For more information on Pink® Partition batts please refer to Section 2.1 - Insulation.

CAC5 - CAC68

- [Ceiling Option 1] Suspended ceiling frame with set plasterboard ceiling
  [Ceiling Option 2] Suspended T-bar exposed grid frame with ceiling tiles for system CAC5

- [Above Ceiling] Pink® Partition 50mm 14 kg/m³ R1.3 insulation baffle in 400mm wide strips to extend from ceiling to concrete slab or roof lining with no gaps or holes.

[All systems are suitable under a concrete slab, timber roof framing or steel roof framing]
[Sound insulation numbers based on minimum 300mm cavity]
[Penetrations in ceiling lining may degrade sound insulation performance]
[Wall to have equal or higher sound insulation rating than CAC ceiling]

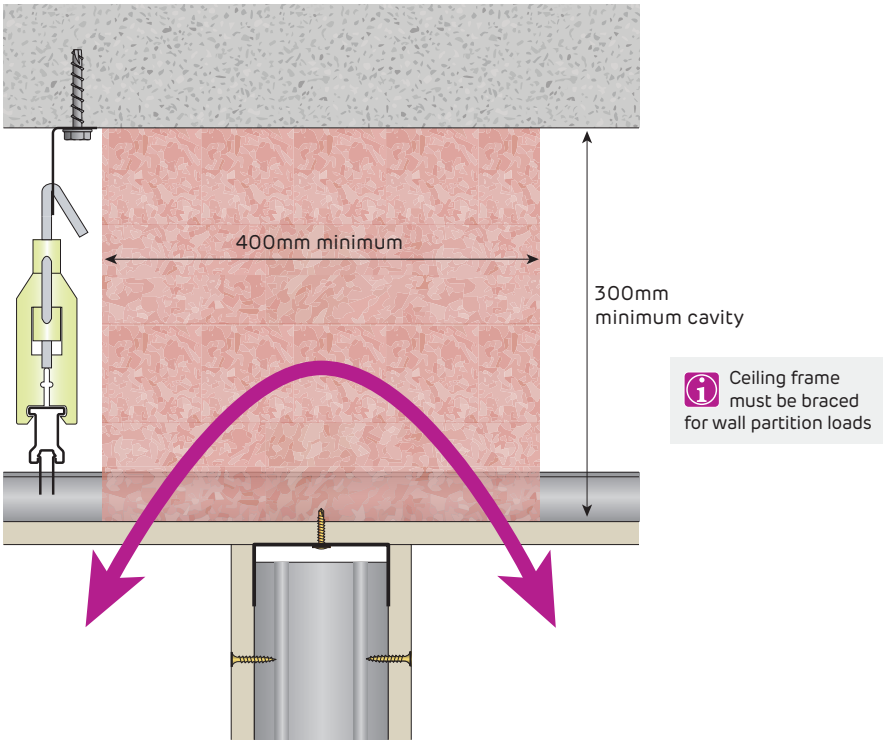

System	Ceiling Lining	Airborne Sound Insulation Rw (Rw + Ctr)	
		Pink® Partition 50mm 14 kg/m³ R1.3 insulation above ceiling lining in 400mm minimum wide strips continued up to concrete slab or roof lining	
CAC5	10mm **span**grid ceiling tiles in exposed grid	43 (36)	
CAC50	1 layer of 10mm **masta**shield or **span**shield	45 (38)	
CAC51	2 layers of 10mm **masta**shield or **span**shield	52 (42)	
CAC54	1 layer of 13mm **masta**shield	50 (40)	
CAC56	1 layer of 10mm **sound**shield or **opal**	50 (40)	Report Day Design 4738-5
CAC57	2 layers of 10mm **sound**shield or **opal**	53 (43)	
CAC58	1 layer of 13mm **sound**shield	51 (41)	
CAC59	2 layers of 13mm **sound**shield	53 (43)	
CAC60	1 layer of 13mm **fire**shield	51 (41)	
CAC62	1 layer of 16mm **fire**shield	51 (41)	
CAC63	1 layer of 13mm **fire**shield plus 1 layer of 16mm **fire**shield	53 (43)	
CAC64	2 layers of 16mm **fire**shield	53 (43)	
CAC66	3 layers of 13mm **fire**shield	54 (44)	
CAC67	1 layer of 13mm **fire**shield plus 2 layers of 16mm **fire**shield	54 (44)	
CAC68	3 layers of 16mm **fire**shield	54 (44)	

For more information on Pink® Partition batts please refer to Section 2.1 - Insulation.

CAC7 - CAC88

- [Ceiling Option 1] Suspended ceiling frame with set plasterboard ceiling
  [Ceiling Option 2] Suspended T-bar exposed grid frame with ceiling tiles for system CAC7

- [Above Ceiling] Quadzero™ Loaded Vinyl Barrier 4 kg/m² above wall to extend from ceiling to concrete slab or roof with no gaps or holes. Pink® Partition 50mm 11 kg/m³ R1.2 insulation placed above ceiling lining.

[All systems are suitable under a concrete slab, timber roof framing or steel roof framing]
[Sound insulation numbers based on minimum 300mm cavity]
[Wall to have equal or higher sound insulation rating than CAC ceiling]

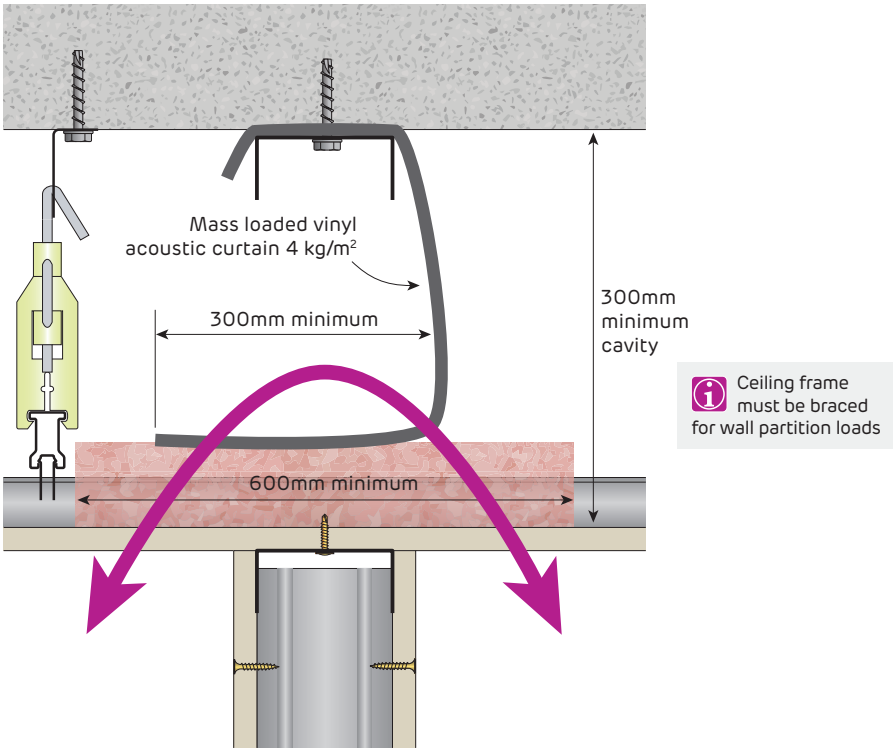

System	Ceiling Lining	Airborne Sound Insulation Rw (Rw + Ctr)	
		Quadzero™ Loaded Vinyl Barrier 4 kg/m² with Pink® Partition 50mm 11 kg/m³ R1.2 insulation above ceiling lining in a 600mm minimum wide strip	
CAC7	10mm **span**grid ceiling tiles in exposed grid	44 (38)	
CAC70	1 layer of 10mm **masta**shield or **span**shield	47 (40)	
CAC71	2 layers of 10mm **masta**shield or **span**shield	52 (42)	
CAC74	1 layer of 13mm **masta**shield	50 (40)	
CAC76	1 layer of 10mm **sound**shield or **opal**	50 (40)	Report Day Design 3094-40
CAC77	2 layers of 10mm **sound**shield or **opal**	53 (43)	
CAC78	1 layer of 13mm **sound**shield	51 (41)	
CAC79	2 layers of 13mm **sound**shield	54 (44)	
CAC80	1 layer of 13mm **fire**shield	51 (41)	
CAC82	1 layer of 16mm **fire**shield	52 (42)	
CAC83	1 layer of 13mm **fire**shield plus 1 layer of 16mm **fire**shield	54 (44)	
CAC84	2 layers of 16mm **fire**shield	54 (44)	
CAC86	3 layers of 13mm **fire**shield	55 (45)	
CAC87	1 layer of 13mm **fire**shield plus 2 layers of 16mm **fire**shield	55 (45)	
CAC88	3 layers of 16mm **fire**shield	55 (45)	

For more information on Pink® Partition batts please refer to Section 2.1 - Insulation.

CAC130

- Minimum 10mm plasterboard ceiling divided by discontinuous wall frames and discontinuous joists

[Sound insulation numbers based on minimum 300mm cavity]

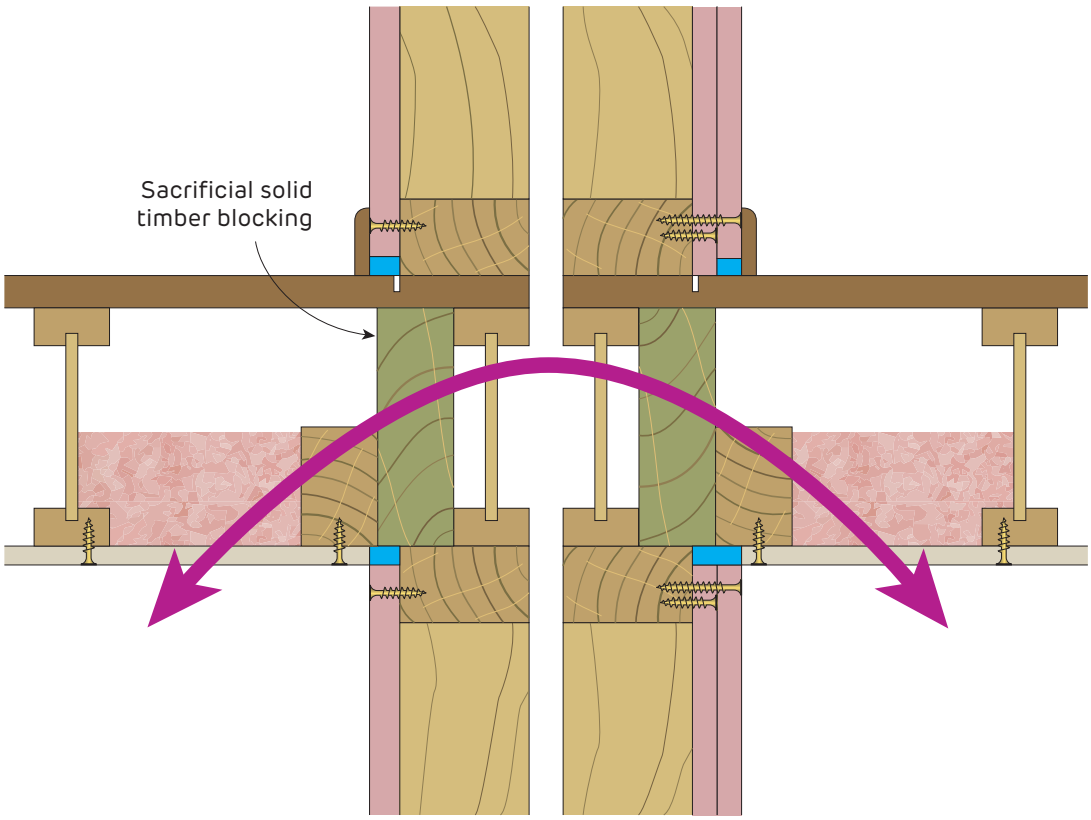

System	Ceiling Lining	Airborne Sound Insulation Rw (Rw + Ctr)		
		No Insulation	Minimum Pink® Batts R1.5 over the ceiling in adjacent cavities or 1200mm from wall	Report Day Design 4738-16
CAC130	1 layer of 10mm **masta**shield or **span**shield	60 (**50**)	64 (**54**)	

For more information on Pink® Batts please refer to Section 2.1 - Insulation.

CAC140

- Minimum 10mm plasterboard ceiling divided by minimum 90mm brick or 140mm unfilled concrete block

[Sound insulation numbers based on minimum 300mm cavity]

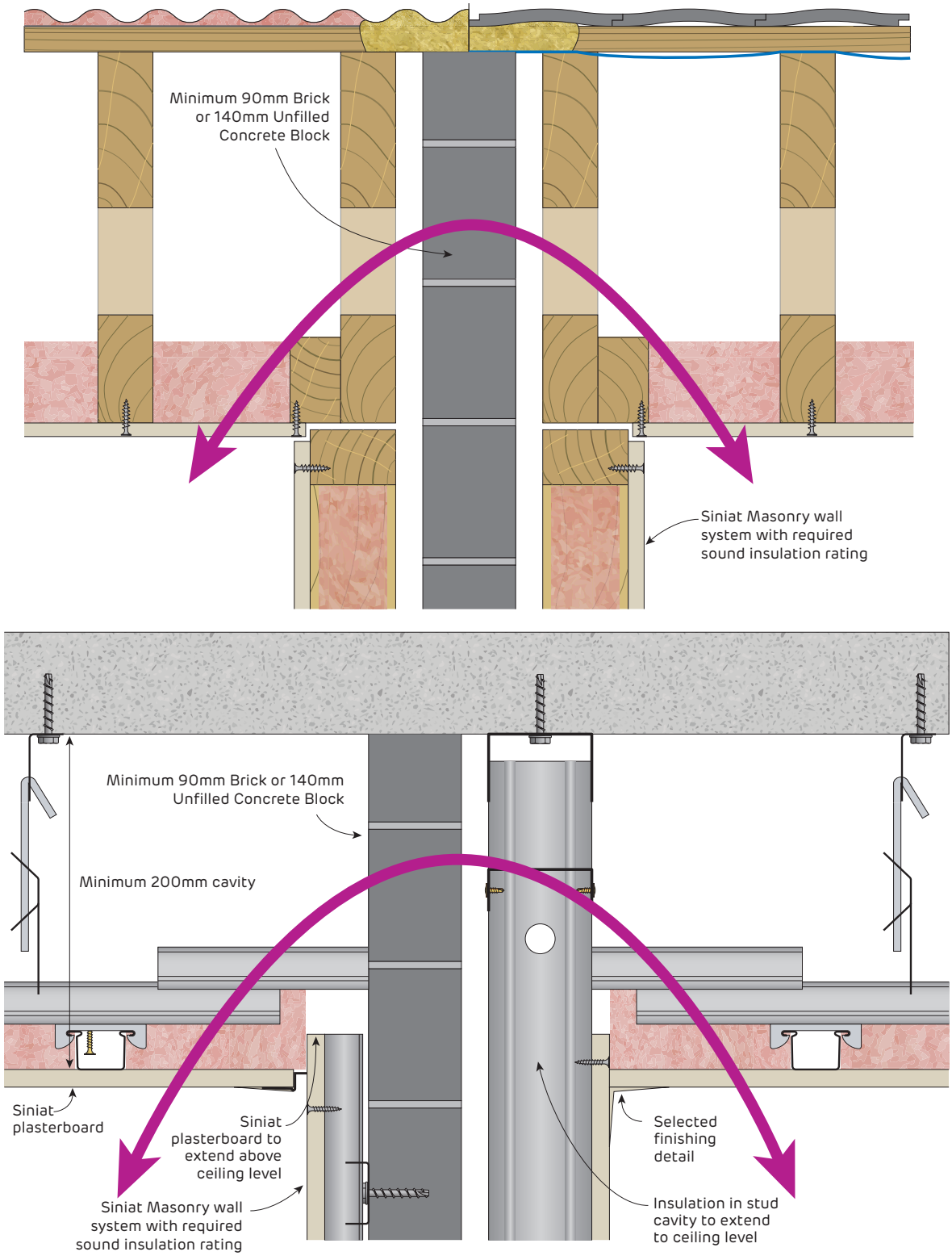

System	Ceiling Lining	Airborne Sound Insulation Rw (Rw + Ctr)		
		No Insulation	Minimum Pink® Batts R1.5 over the ceiling 1200mm from wall	Report Day Design 4738-16
CAC140	1 layer of 10mm **masta**shield or **span**shield	58 (48)	60 (**50**)	

For more information on Pink® Batts please refer to Section 2.1 - Insulation.

CAC141

- 13mm fireshield and 16mm fireshield ceiling on clips and furring channel with minimum 40mm cavity to the underside of the joists, rafters or trusses.

[Maintains RISF 60 when using an RISF 60 minute ceiling]
[Sound insulation numbers based on minimum 300mm cavity]
[Non-acoustic penetrations in ceiling lining may degrade sound insulation performance]
[Wall to have equal or higher sound insulation rating than CAC ceiling]

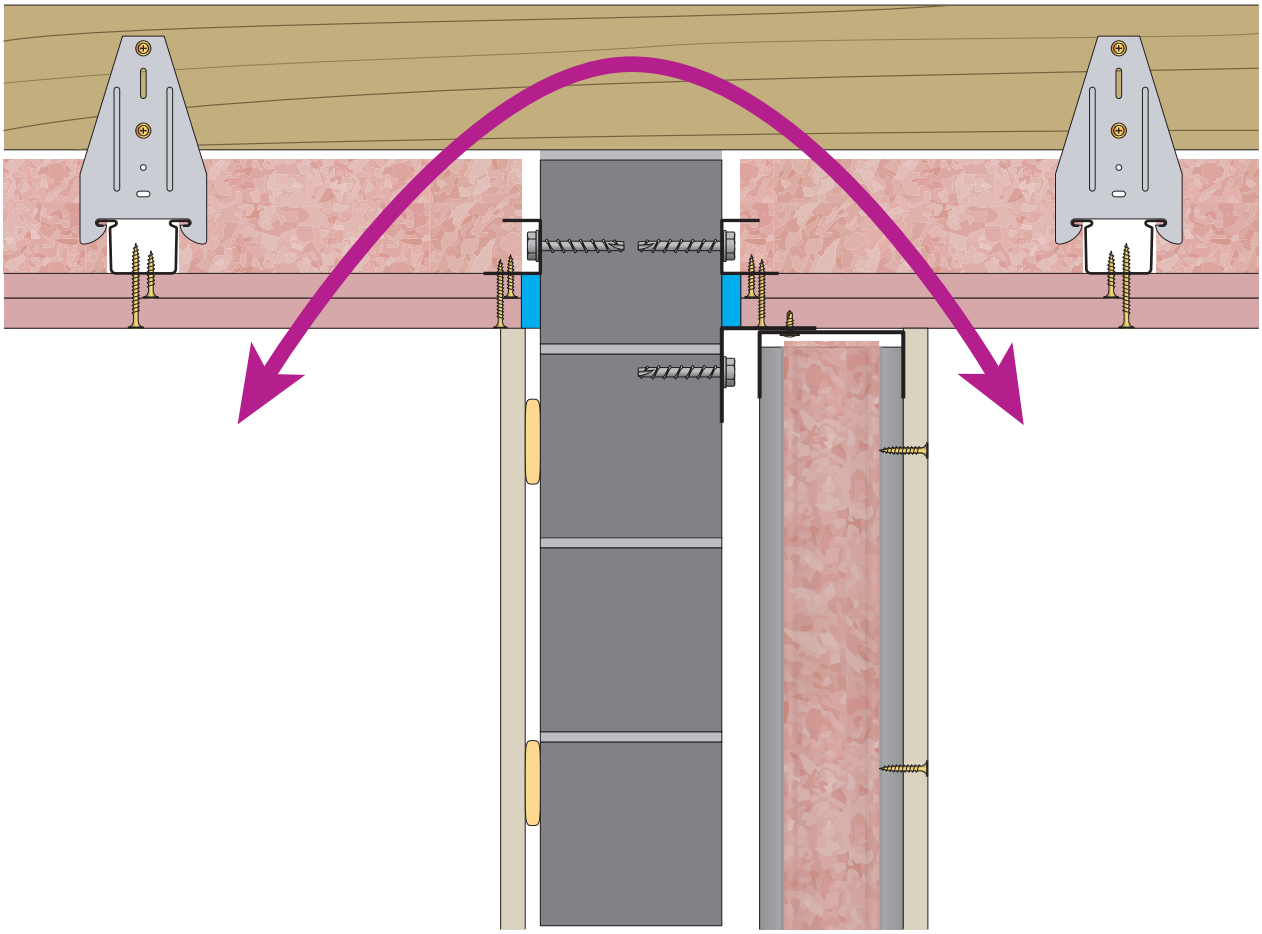

System	Ceiling Lining	Airborne Sound Insulation (Rw + Ctr)	
		Minimum Pink® Batts R1.5 over the ceiling 1200mm from wall	Report PKA 215 085
CAC141	13mm **fire**shield and 16mm **fire**shield	(**50**)	

For more information on Pink® Batts please refer to Section 2.1 - Insulation.

CAC160

- 13mm fireshield and 16mm fireshield (RISF 60 minute) ceiling on clips and furring channel with minimum 40mm cavity to the underside of the timber or steel joists, rafters or trusses.

[Sound insulation numbers based on minimum 300mm cavity]
[Non-acoustic penetrations in ceiling lining may degrade sound insulation performance]
[Wall to have equal or higher sound insulation rating than CAC ceiling]

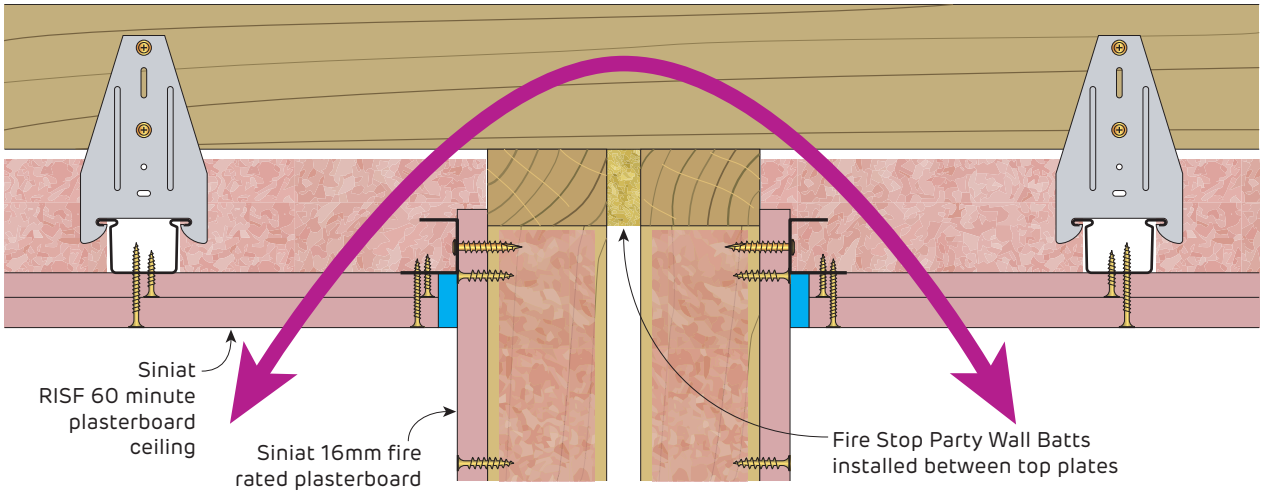

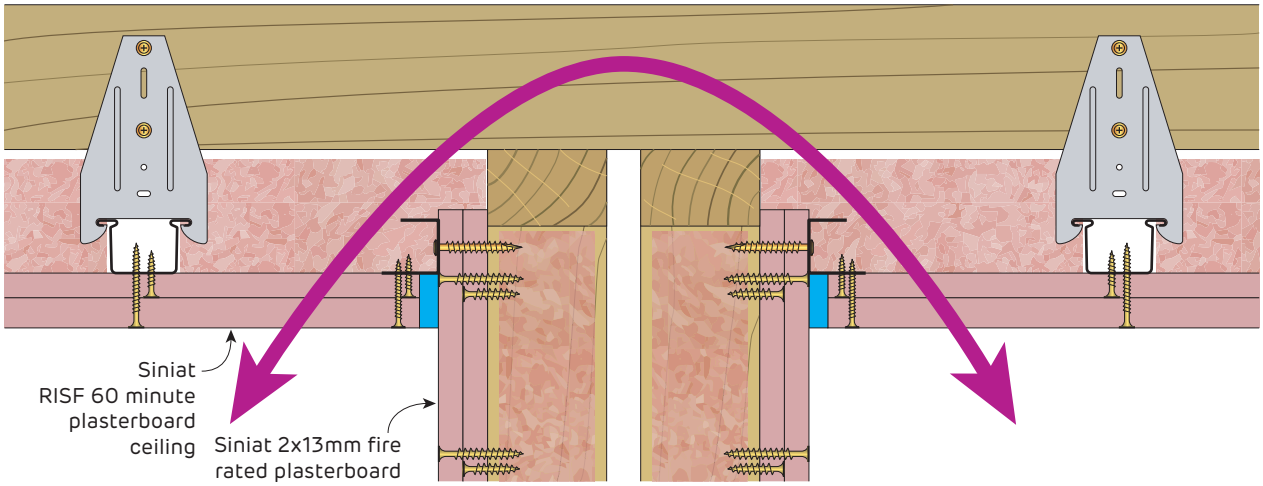

System	Ceiling Lining	Airborne Sound Insulation (Rw + Ctr)	
		Minimum Pink® Batts R1.5 over the ceiling 1200mm from wall	Report PKA 215 085
CAC160	13mm **fire**shield and 16mm **fire**shield	(**50**)	

For more information on Pink® Batts please refer to Section 2.1 - Insulation.

CAC150 - CAC151

- Minimum 10mm plasterboard ceiling divided by any Hebel AAC wall system suitable for separating walls

[Sound insulation numbers based on minimum 300mm cavity]
[Wall to have equal or higher sound insulation rating than CAC ceiling]

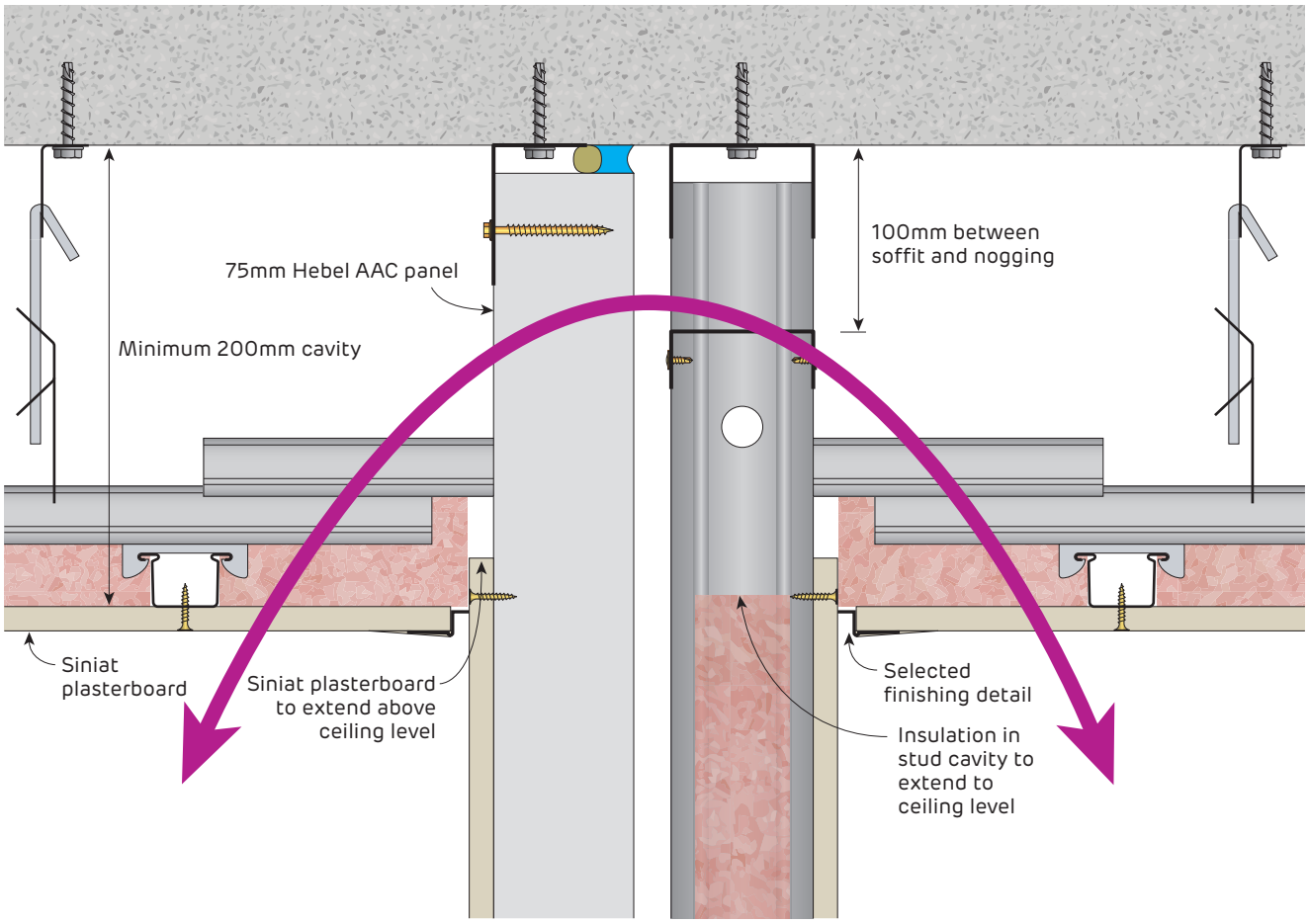

System	Ceiling Lining	Airborne Sound Insulation Rw (Rw + Ctr)		
		No Insulation	Pink® Partition 50mm 11 kg/m³ R1.2 to 600mm both sides of wall	Report Day Design 5008.10-1
CAC150	1 layer of 10mm **masta**shield or **span**shield	45 (40)	50 (45)	
CAC151	1 layer of 13mm **masta**shield	50 (45)	55 (**50**)	

For more information on Pink® Partition batts please refer to Section 2.1 - Insulation.



SYSTEMS	**541**
INSTALLATION	**546**
GENERAL REQUIREMENTS	546
FRAMING	547
PLASTERBOARD LAYOUT	561
PLASTERBOARD FIXING	561
CONSTRUCTION DETAILS	**563**
SEISMIC CONSTRUCTION DETAILS	**580**
FINISHING DETAILS	**592**

5.3 Steel Stud Ceilings

The ceilings in this section are constructed using steel studs as the ceiling joists.

Common applications for these ceilings include corridors, above stairwells, and under concrete floors.

This section contains systems for fire rated ceilings, including fire rated from above only, and fire rated from above and below. If access is from below only, and the ceiling is required to be fire rated from above, an alternative system is a the Shaft Wall Ceiling, refer to Section 5.4.

For acoustic ceiling systems using steel stud framing to control soil and waste pipe noise, refer to Section 6.1.

For additional information of ceiling installation, refer to Section 5.1.

SSC102

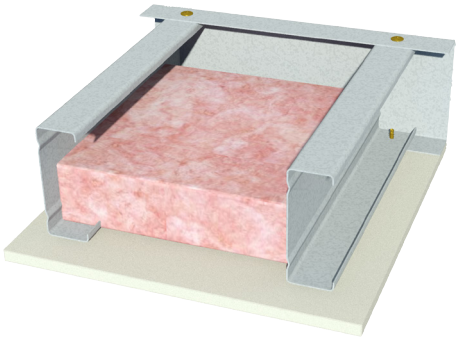

- Minimum 64mm steel stud framing at maximum 450mm centres
- [Below] 1 layer of 10mm **span**shield

Stud Depth (mm)	**Ceiling Thickness** (mm)	**Sound Insulation** for studs at 450mm centres **Rw (Rw + Ctr)**		
		No insulation	Pink® Partition 50mm 11kg/m³	Report
64	74	28 (24)	31 (27)	Day Design 3094-35
76	86			
92	102			
150	160			

SSC104

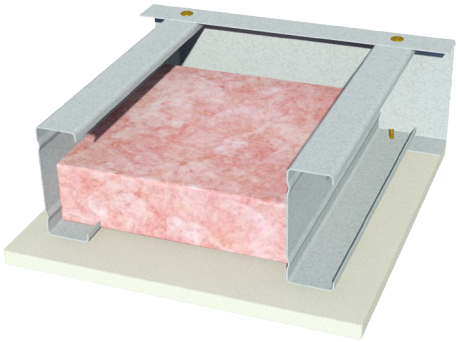

- Minimum 64mm steel stud framing at maximum 450mm centres
- [Below] 1 layer of 13mm **masta**shield

mastashield can be substituted with **water**shield

Stud Depth (mm)	**Ceiling Thickness** (mm)	**Sound Insulation** for studs at 450mm centres **Rw (Rw + Ctr)**		
		No insulation	Pink® Partition 50mm 11kg/m³	Report
64	77	29 (25)	32 (28)	Day Design 3094-35
76	89			
92	105			
150	163			

SSC108

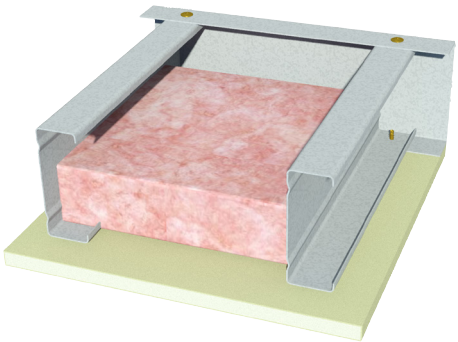

- Minimum 64mm steel stud framing at maximum 450mm centres
- [Below] 1 layer of 13mm **sound**shield

Stud Depth (mm)	**Ceiling Thickness** (mm)	**Sound Insulation** for studs at 450mm centres **Rw (Rw + Ctr)**		
		No insulation	Pink® Partition 50mm 11kg/m³	Report
64	77	30 (27)	33 (30)	Day Design 3094-35
76	89			
92	105			
150	163			

SSC2

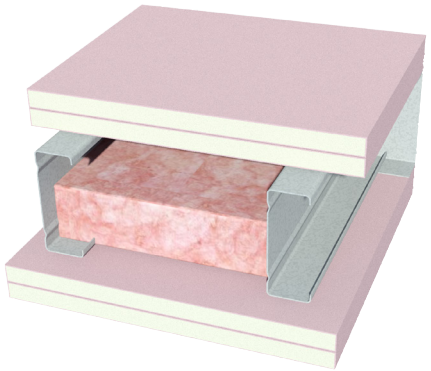

- [Above] 2 layers of 16mm **fire**shield
- Minimum 64mm steel stud framing at maximum 450mm centres
- [Below] 2 layers of 16mm **fire**shield

fireshield can be substituted with **multi**shield

Fire Resistance Level
120/120/120
rated from above
90/90/90
rated from below
Report FC14332

Stud Depth (mm)	**Ceiling Thickness** (mm)	**Sound Insulation** for studs at 450mm centres **Rw (Rw + Ctr)**		
		No insulation	Pink® Partition 50mm 11kg/m³	Report
64	128	47 (38)	50 (42)	Day Design 3094-23 Insul v8
76	140	48 (39)	50 (43)	
92	156	49 (42)	55 (49)	
150	214	51 (44)	55 (**51**)	

SSC3

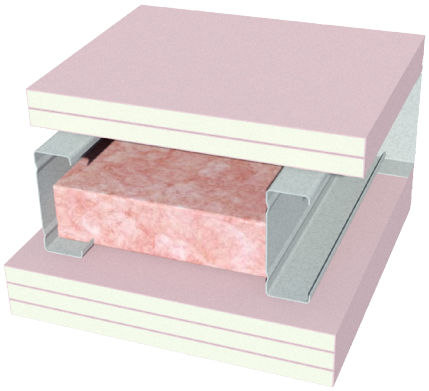

- [Above] 2 layers of 16mm **fire**shield
- Minimum 64mm steel stud framing at maximum 450mm centres
- [Below] 3 layers of 16mm **fire**shield

fireshield can be substituted with **multi**shield

Fire Resistance Level

120/120/120
rated from above and below

Report FC14332

Stud Depth (mm)	**Ceiling Thickness (mm)**	**Sound Insulation** for studs at 450mm centres **Rw (Rw + Ctr)**		
		No insulation	Pink® Partition 50mm 11kg/m³	Report
64	144	50 (41)	52 (45)	Day Design 3094-23 Insul v8
76	156	50 (41)	52 (46)	
92	172	52 (45)	57 (**52**)	
150	230	54 (47)	57 (**53**)	

SSC4

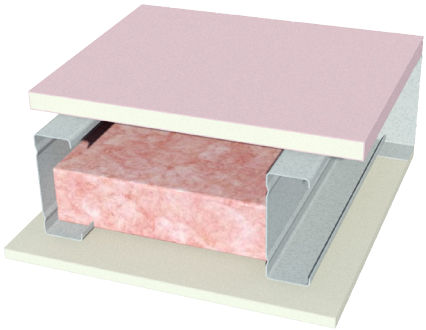

- [Above] 1 layer of 16mm **fire**shield
- Minimum 64mm steel stud framing at maximum 450mm centres
- [Below] 1 layer of 10mm **masta**shield

fireshield can be substituted with **multi**shield
mastashield can be substituted with **water**shield

Fire Resistance Level

60/60/60
rated from above only

Report FC14332

Stud Depth (mm)	**Ceiling Thickness (mm)**	**Sound Insulation** for studs at 450mm centres **Rw (Rw + Ctr)**		
		No insulation	Pink® Partition 50mm 11kg/m³	Report
64	90	37 (28)	40 (31)	Insul v8
76	102	37 (29)	41 (31)	
92	118	38 (28)	42 (31)	
150	176	40 (30)	45 (35)	

SSC6

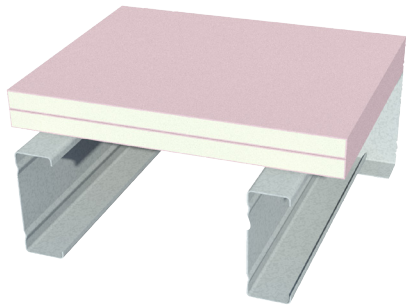

- [Above] 2 layers of 16mm **fire**shield
- Minimum 64mm steel stud framing at maximum 450mm centres

fireshield can be substituted with **multi**shield

Fire Resistance Level

60/60/60
rated from above only

Report FC14332

Stud Depth (mm)	**Ceiling Thickness (mm)**	**Sound Insulation** for studs at 450mm centres **Rw (Rw + Ctr)**	
		No insulation	Report
64	96	35 (32)	Day Design 3094-23
76	108		
92	124		
150	182		

SSC7

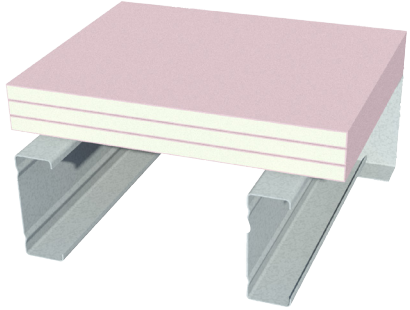

- [Above] 3 layers of 13mm **fire**shield
- Minimum 64mm steel stud framing at maximum 450mm centres

fireshield can be substituted with **multi**shield

Fire Resistance Level

90/90/90
rated from above only

Report FC14332

Stud Depth (mm)	**Ceiling Thickness (mm)**	**Sound Insulation** for studs at 450mm centres **Rw (Rw + Ctr)**	
		No insulation	Report
64	103	37 (35)	Day Design 3094-23
76	115		
92	131		
150	189		

SSC8

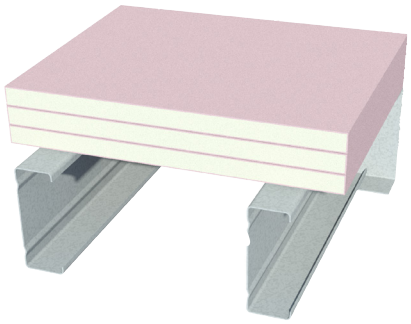

- [Above] 3 layers of 16mm **fire**shield
- Minimum 64mm steel stud framing at maximum 450mm centres

fireshield can be substituted with **multi**shield

Fire Resistance Level

120/120/120
rated from above only

Report FC14332

Stud Depth (mm)	**Ceiling Thickness** (mm)	**Sound Insulation** for studs at 450mm centres **Rw (Rw + Ctr)**	
		No insulation	Report
64	112	38 (36)	Day Design 3094-23
76	124		
92	140		
150	198		

SSC9

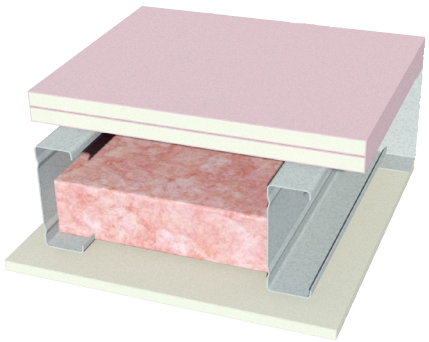

- [Above] 2 layers of 13mm **fire**shield
- Minimum 64mm steel stud framing at maximum 450mm centres
- [Below] 1 layer of 10mm **masta**shield

fireshield can be substituted with **multi**shield
mastashield can be substituted with **water**shield

Fire Resistance Level

90/90/90
rated from above only

Report FC14332

Stud Depth (mm)	**Ceiling Thickness** (mm)	**Sound Insulation** for studs at 450mm centres **Rw (Rw + Ctr)**		
		No insulation	Pink® Partition 50mm 11kg/m³	
64	100	40 (31)	44 (34)	Report
76	112	41 (31)	44 (34)	Insul v8
92	128	42 (31)	47 (35)	
150	186	44 (34)	49 (39)	

SSC10

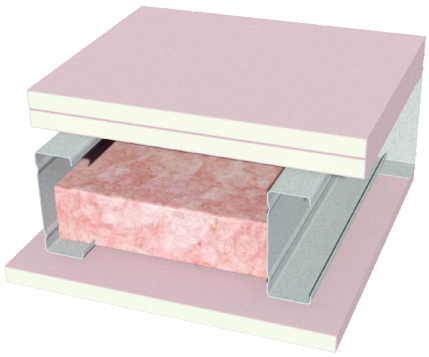

- [Above] 2 layers of 16mm **fire**shield
- Minimum 64mm steel stud framing at maximum 450mm centres
- [Below] 1 layer of 16mm **fire**shield

fireshield can be substituted with **multi**shield

Fire Resistance Level

120/120/120
rated from above only

Report FC14332

Stud Depth (mm)	**Ceiling Thickness** (mm)	**Sound Insulation** for studs at 450mm centres **Rw (Rw + Ctr)**		
		No insulation	Pink® Partition 50mm 11kg/m³	
64	112	43 (32)	46 (37)	Report
76	124	44 (33)	47 (38)	Insul v8
92	140	44 (35)	48 (40)	
150	198	46 (38)	49 (43)	

SSC11

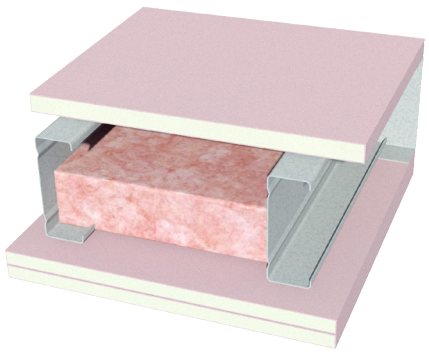

- [Above] 1 layers of 16mm **fire**shield
- Minimum 64mm steel stud framing at maximum 450mm centres
- [Below] 2 layer of 13mm **fire**shield

fireshield can be substituted with **multi**shield

Fire Resistance Level

60/60/60
rated from above and below

Report FC14332

Stud Depth (mm)	**Ceiling Thickness** (mm)	**Sound Insulation** for studs at 450mm centres **Rw (Rw + Ctr)**		
		No insulation	Pink® Partition 50mm 11kg/m³	
64	106	43 (31)	46 (36)	Report
76	118	43 (32)	46 (37)	Insul v8
92	134	44 (35)	48 (40)	
150	192	46 (38)	49 (43)	

SSC12

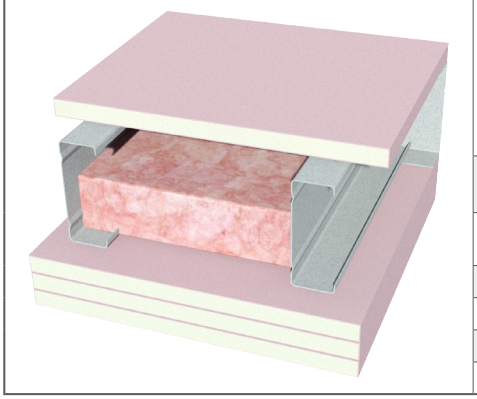

- [Above] 1 layer of 16mm **fire**shield
- Minimum 64mm steel stud framing at maximum 450mm centres
- [Below] 3 layers of 16mm **fire**shield

fireshield can be substituted with **multi**shield

Fire Resistance Level
60/60/60
rated from above
120/120/120
rated from below
Report FC14332

Stud Depth (mm)	**Ceiling Thickness (mm)**	**Sound Insulation** for studs at 450mm centres **Rw (Rw + Ctr)**		
		No insulation	Pink® Partition 50mm 11kg/m³	Report
64	128	46 (35)	49 (40)	Day Design 3094-23 Insul v8
76	140	47 (36)	49 (41)	
92	156	48 (39)	51 (43)	
150	214	49 (42)	53 (46)	

SSC200

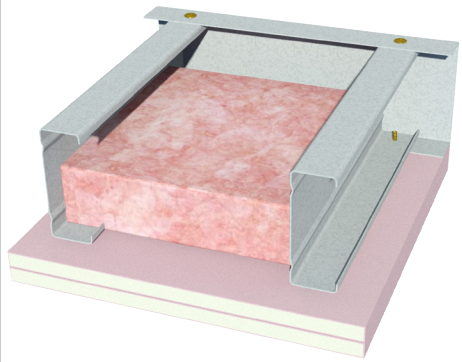

- Minimum 64mm steel stud framing at maximum 450mm centres
- [Below] 2 layers of 13mm **fire**shield

fireshield can be substituted with **multi**shield

Fire Resistance Level
30/30/30
rated from below only
Report FC14332

Stud Depth (mm)	**Ceiling Thickness (mm)**	**Sound Insulation** for studs at 450mm centres **Rw (Rw + Ctr)**		
		No insulation	Pink® Partition 50mm 11kg/m³	Report
64	96	34 (31)	39 (35)	Day Design 3094-23 INSUL v9
76	108			
92	124			
150	182			

SSC201

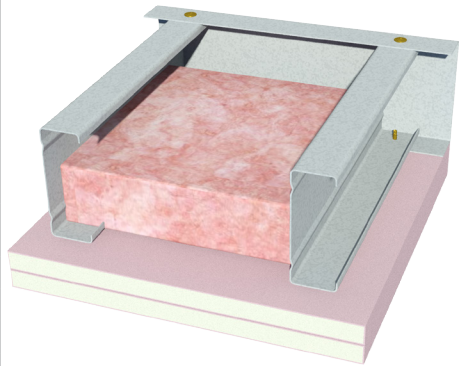

- Minimum 64mm steel stud framing at maximum **600mm** centres
- [Below] 2 layers of 16mm **fire**shield

fireshield can be substituted with **multi**shield

Fire Resistance Level
30/30/30
rated from below only
Report FC14332

Stud Depth (mm)	**Ceiling Thickness (mm)**	**Sound Insulation** for studs at 450mm centres **Rw (Rw + Ctr)**		
		No insulation	Pink® Partition 50mm 11kg/m³	Report
64	96	35 (32)	40 (37)	Day Design 3094-23 INSUL v9
76	108			
92	124			
150	182			

SSC202

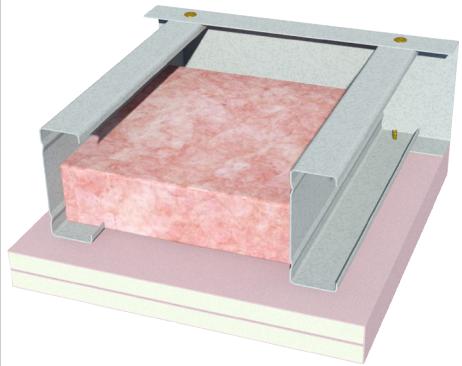

- Minimum 64mm steel stud framing at maximum **450mm** centres
- [Below] 2 layers of 16mm **fire**shield

fireshield can be substituted with **multi**shield

Fire Resistance Level
60/60/60
rated from below only
Report FC14332

Stud Depth (mm)	**Ceiling Thickness (mm)**	**Sound Insulation** for studs at 450mm centres **Rw (Rw + Ctr)**		
		No insulation	Pink® Partition 50mm 11kg/m³	Report
64	96	35 (32)	40 (37)	Day Design 3094-23 INSUL v9
76	108			
92	124			
150	182			

SSC203

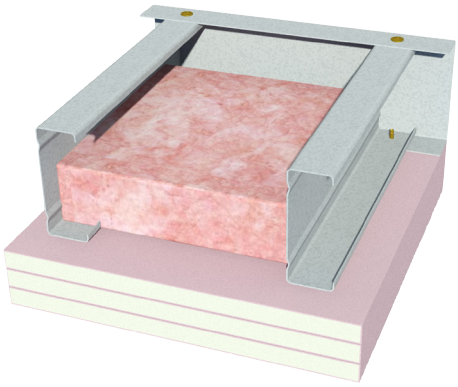

- Minimum 64mm steel stud framing at maximum 450mm centres
- [Below] 3 layers of 16mm **fire**shield

fireshield can be substituted with **multi**shield

Fire Resistance Level

90/90/90
rated from below only

Report FC14332

Stud Depth (mm)	**Ceiling Thickness (mm)**	**Sound Insulation** for studs at 450mm centres **Rw (Rw + Ctr)**		
		No insulation	Pink® Partition 50mm 11kg/m³	Report
64	112	38 (36)	43 (40)	Day Design 3094-23 INSUL v9
76	124			
92	140			
150	198			

SSC204

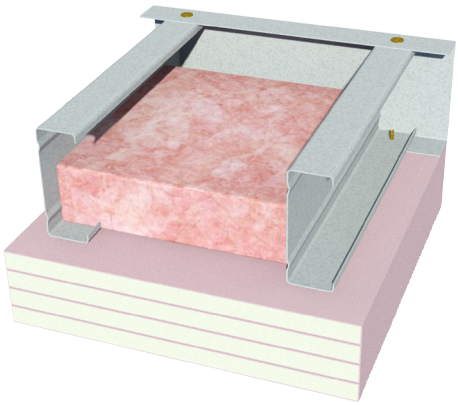

- Minimum 64mm steel stud framing at maximum 450mm centres
- [Below] 4 layers of 16mm **fire**shield

fireshield can be substituted with **multi**shield

Fire Resistance Level

120/120/120
rated from below only

Report FC14332

Stud Depth (mm)	**Ceiling Thickness (mm)**	**Sound Insulation** for studs at 450mm centres **Rw (Rw + Ctr)**		
		No insulation	Pink® Partition 50mm 11kg/m³	Report
64	128	41 (39)	46 (43)	INSUL v9
76	140			
92	156			
150	214			

General Requirements

	Non-Fire Rated	Fire Rated
Install control joints in plasterboard ceilings: › At 12m maximum intervals › At all control joints in the structure › At any change in the substrate › At the junction of a larger room and passageway.	✓	✓
All ceilings in this section are non-trafficable. Do not walk on plasterboard ceilings!	✓	✓
Limit dead loads on plasterboard ceilings to 2 kg/m^2 for plasterboard spanning 600mm framing centres.	✓	✓
Limit dead loads on plasterboard ceilings to 2.5 kg/m^2 for plasterboard spanning 450mm framing centres where the plasterboard can usually span 600mm centres.	✓	✓
Only joint the face layer. As a minimum, use paper tape with either masta**base** or masta**longset**.		✓
Use approved fire rated penetration details. Fire penetrations may require fire collars or other devices to maintain fire performance.		✓
Use **bindex** fire and acoustic sealant on all gaps and around perimeter.		✓
Attach ceiling fixtures to framing members only. Ensure the framing is designed to carry any additional load.	✓	✓
All structures supporting fire rated ceilings must have an equal or greater FRL than the ceiling they support eg, a ceiling with FRL of 90/90/90 must be supported by a load bearing wall or column with FRL of at least 90 minutes.		✓

› Structural beams enclosed by a fire rated ceiling are given the same structural protection rating as the ceiling eg, a structural beam located above a ceiling rated to FRL 90/90/90 would have FRL of 90/–/–.

- The FRL and RISF will not be reduced if a fire rated ceiling is built on an angle eg, a raked ceiling.
- Consider the corrosive effect of sea spray on steel components, select framing and fasteners accordingly.
- The FRL will not be reduced if the insulation directly above plasterboard is omitted.
- Plasterboard installations in close proximity to metal roofs (ie: raked ceiling or with small ceiling cavities) require smaller control joint intervals as they are exposed to larger rates of thermal expansion.
- Excessive vibration of the ceiling (by installing ceiling services, etc) is known to cause joint cracking and joint peaking.
- Locate ceiling services so they do not cut through ceiling framing members, otherwise some degradation of the ceiling can be expected.

Framing

	Non-Fire Rated	Fire Rated
Framing members as per framing table or structural design up to 600mm maximum.	✓	✓
For a specific project, determine the relevant wind pressure load on an internal ceiling from Section 2.3, or the QR link below. Wind pressure loads must be considered for internal ceilings to comply with *AS/NZS 1170.2 Wind Actions* and *AS/NZS 2785 Suspended Ceilings - Design and Installation.*	✓	✓
Stagger joins in adjacent Top Cross Rails and Furring Channels by 1200mm	✓	✓
Install additional framing members around openings.	✓	✓

Siniat Internal Wind Load Calculator

Refer to Section 2.3 for assistance determining the relevant internal wind pressures for a specific project. Or use the Siniat Internal Wind Load Calculator by clicking on the link or by using your phone's camera on the QR code.

Table 1 Maximum Perimeter Track Anchor Spacing

Ceiling Framing Member Spacing (mm)	Maximum Anchor Spacing (mm)
600	600
450	600
400	600
300	450

1. Additional anchors 100mm maximum from track ends.
2. 150mm tracks require 2 anchors across width.

Table 2 Maximum Span (Framing Spacing) for Plasterboard

Plasterboard Type	General Internal Areas	Areas of Intermittent High Humidity eg. Unventilated Bathrooms, Basements and External Ceilings
10mm **masta**shield	450mm	300mm
13mm **masta**shield	600mm	450mm
10mm **span**shield	600mm	450mm
10mm **opal**	600mm	450mm
10mm and 13mm **sound**shield	600mm	450mm
10mm and 13mm **water**shield	600mm	450mm
13mm and 16mm **fire**shield	600mm	450mm
13mm and 16mm **multi**shield	600mm	450mm
13mm and 16mm **tru**rock	600mm	450mm
13mm and 16mm **tru**rock hd	600mm	450mm

Fire Rated and Non-Fire Rated
Stud Ceiling End Connections

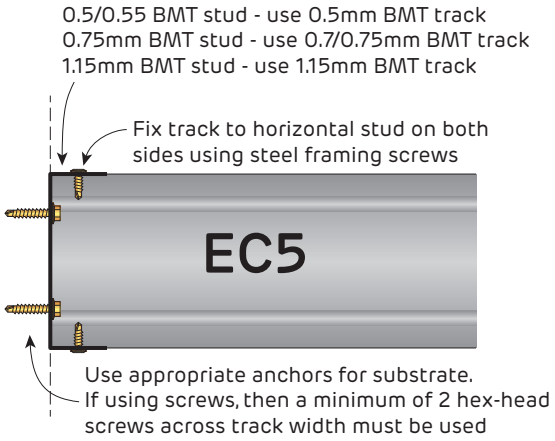

FIGURE 1 Fixed End Connection EC5
Section

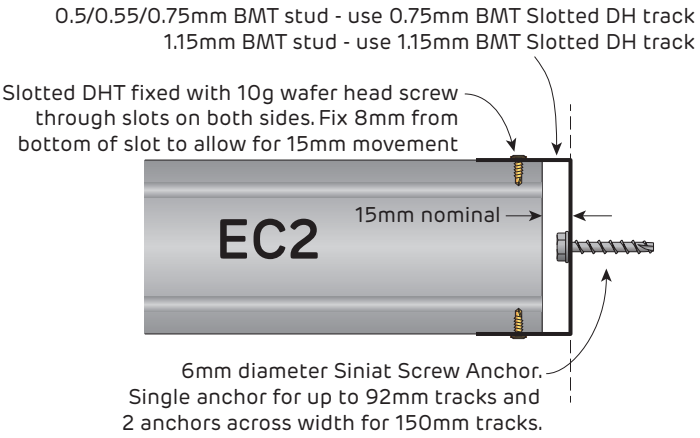

FIGURE 2 Sliding End Connection EC2
Section

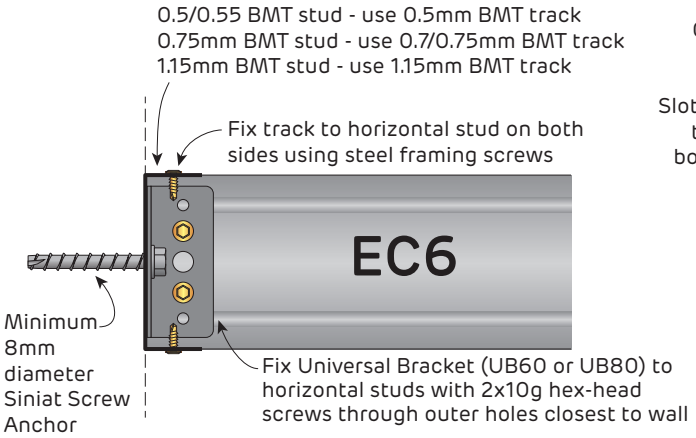

FIGURE 3 Fixed End Connection EC6
92mm or 150mm studs only
Section

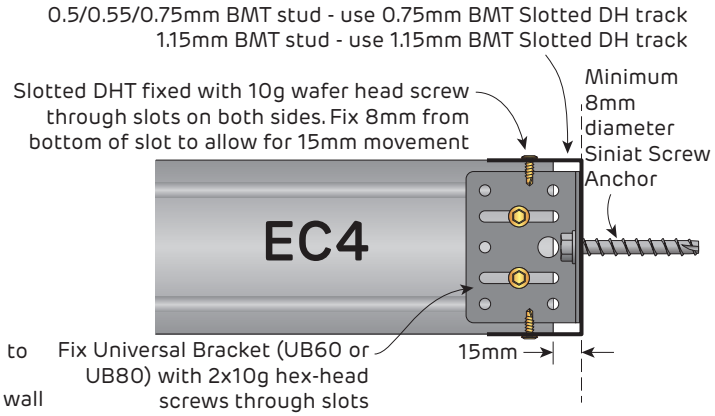

FIGURE 4 Sliding End Connection EC4
92mm or 150mm studs only
Section

Siniat Internal Wind Load Calculator

Refer to Section 2.3 for assistance determining the relevant internal wind pressures for a specific project. Or use the Siniat Internal Wind Load Calculator by clicking on the link or by using your phone's camera on the QR code.

Table 1 Single Span Internal Steel Stud Ceiling Span Table (mm) - REGION A

Refer to Blueprint Section 2.3 for assistance determining the relevant wind pressures for a specific project.

Steel stud ceiling lined on the underside only	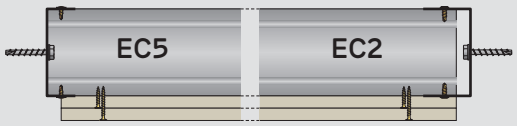	Up to BCA Building Importance Level 3	Ultimate pressure W_U (kPa)	0.39
			Serviceability pressure W_S (kPa)	0.25

Ceiling Stud Depth and BMT (mm)	Maximum Ceiling Stud Centres (mm)	1x10mm	2x10mm	1x13mm	2x13mm	3x13mm	1x16mm	2x16mm	3x16mm
64 x 0.5	600	2110	1960	2030	1860	1730	2020	1840	1710
	450	2320	2160	2240	2040	1900	2220	2030	1880
	400	2410	2250	2330	2130	1980	2310	2110	1960
	300	2650	2470	2560	2340	2180	2550	2320	2160
64 x 0.75	600	2400	2240	2320	2120	1970	2310	2100	1950
	450	2640	2460	2550	2330	2170	2540	2310	2150
	400	2750	2560	2660	2420	2260	2640	2400	2230
	300	3030	2820	2920	2670	2490	2910	2650	2460
64 x 1.15	600	2770	2580	2670	2440	2270	2660	2420	2250
	450	3050	2840	2940	2690	2500	2920	2660	2470
	400	3170	2950	3060	2790	2600	3040	2770	2570
	300	3490	3250	3370	3070	2860	3350	3050	2830
76 x 0.55	600	2490	2310	2400	2190	2040	2390	2170	2020
	450	2740	2550	2640	2410	2250	2630	2390	2220
	400	2850	2650	2750	2510	2340	2730	2490	2310
	300	3130	2920	3020	2760	2570	3010	2740	2540
76 x 0.75	600	2790	2590	2690	2460	2290	2670	2430	2260
	450	3070	2860	2960	2700	2520	2940	2680	2490
	400	3190	2970	3080	2810	2620	3060	2790	2590
	300	3510	3270	3390	3100	2880	3370	3070	2850
76 x 1.15	600	3180	2960	3070	2800	2610	3050	2770	2580
	450	3500	3260	3380	3080	2870	3360	3050	2840
	400	3640	3390	3510	3210	2980	3490	3180	2950
	300	4000	3730	3860	3530	3290	3840	3500	3250
92 x 0.55	600	2900	2700	2800	2550	2180	2780	2530	2110
	450	3190	2970	3080	2810	2620	3060	2790	2590
	400	3320	3090	3200	2920	2720	3180	2900	2690
	300	3650	3400	3530	3220	3000	3510	3190	2970
92 x 0.75	600	3200	2980	3090	2820	2630	3070	2800	2600
	450	3520	3280	3400	3110	2890	3380	3080	2860
	400	3660	3410	3540	3230	3010	3520	3200	2980
	300	4030	3760	3900	3560	3310	3870	3530	3280
92 x 1.15	600	3690	3430	3560	3250	3030	3540	3220	3000
	450	4060	3780	3920	3580	3330	3900	3550	3300
	400	4220	3930	4080	3720	3470	4050	3690	3430
	300	4560	4330	4440	4100	3820	4420	4060	3770
150 x 0.75	600	4630	4390	4510	4170	3680	4490	4140	3580
	450	4970	4710	4840	4520	4280	4820	4490	4230
	400	5120	4850	4990	4660	4420	4970	4630	4380
	300	5500	5220	5360	5010	4750	5340	4970	4710
150 x 1.15	600	5140	4870	5010	4680	4440	4990	4650	4400
	450	5530	5240	5380	5030	4770	5360	4990	4730
	400	5690	5400	5540	5180	4910	5520	5140	4870
	300	6120	5800	5960	5570	5280	5930	5530	5230

Nogging Table

Ceiling Span (m)	Number of Noggings evenly spaced along ceiling joist
0 - 2.0	0
2.0 - 4.0	1
above 4.0	2

End Track Anchor Demand

1. Maximum anchor shear and tension demand = 1.32 kN
2. Anchors at maximum 1.5 x stud spacing up to 600mm maximum, and 100mm maximum from ends.
3. 150mm tracks require 2 anchors across width.

1. End Connection 1 is **Sliding** type EC2. End Connection 2 is **Fixed** type EC5. Refer to *Stud Ceiling End Connections* for end connection details including track BMT.
2. Table based upon downward (suction) and upward (uplift) pressures, for internal use only.
3. Table includes self weight and 2 kg/m^2 insulation weight with an additional 3 kg/m^2 service load. No further allowance for additional point loads or live loads.
4. Contact Siniat or a structural engineer to check ceiling for earthquake actions. Specific project information is required.
5. Table refers to Siniat steel studs of grade G300 steel with Zincalume™ AM150 or AM125 corrosion protection. Maximum production lengths available are 7.2m
6. Designed in accordance with *AS/NZS 4600:2018 Cold Formed Steel Structures.*
7. Wind pressures determined in accordance with *AS/NZS 1170.2 Wind Actions.*
8. Ultimate Load Case1: 1.2G + Wu (suction) + $Q_{0.03kPa\ Service\ Load}$
   Ultimate Load Case 2: 0.9G + Wu (uplift).
9. Serviceability Load Case 1: G with deflection limited to span/500
   Serviceability Load Case 2: G + Ws with deflection limited to span/360 or 12mm.
10. The nominated lateral pressures and deflection limits must be checked for suitability for a specific project.

Table 2 Single Span Internal Steel Stud Ceiling Span Table (mm) - REGION A

Refer to Blueprint Section 2.3 for assistance determining the relevant wind pressures for a specific project.

Steel stud ceiling lined on the underside only	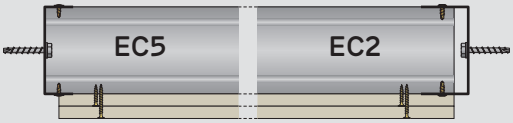	Up to BCA Building Importance Level 3	Ultimate pressure W_U (kPa)	0.54
			Serviceability pressure W_S (kPa)	0.35

Ceiling Stud Depth and BMT (mm)	Maximum Ceiling Stud Centres (mm)	1x10mm	2x10mm	1x13mm	2x13mm	3x13mm	1x16mm	2x16mm	3x16mm
64 x 0.5	600	1940	1830	1880	1750	1630	1880	1740	1600
	450	2130	2020	2070	1930	1810	2070	1910	1800
	400	2220	2100	2160	2000	1890	2150	1990	1870
	300	2440	2310	2380	2210	2080	2360	2190	2060
64 x 0.75	600	2210	2090	2150	2000	1880	2140	1980	1860
	450	2430	2300	2370	2200	2070	2360	2180	2050
	400	2530	2390	2460	2290	2150	2450	2270	2130
	300	2790	2630	2710	2520	2370	2700	2500	2350
64 x 1.15	600	2550	2410	2480	2300	2160	2470	2280	2140
	450	2800	2650	2730	2530	2380	2710	2510	2360
	400	2920	2750	2840	2630	2480	2820	2610	2450
	300	3210	3030	3120	2900	2730	3110	2880	2700
76 x 0.55	600	2290	2160	2220	2070	1860	2210	2050	1820
	450	2520	2380	2450	2270	2140	2440	2260	2120
	400	2620	2470	2550	2360	2230	2540	2350	2200
	300	2880	2720	2800	2600	2450	2790	2580	2430
76 x 0.75	600	2560	2420	2490	2320	2180	2480	2300	2160
	450	2820	2670	2750	2550	2400	2730	2530	2380
	400	2940	2770	2860	2650	2490	2840	2630	2470
	300	3230	3050	3140	2920	2750	3130	2900	2720
76 x 1.15	600	2920	2760	2840	2640	2480	2830	2620	2460
	450	3220	3040	3130	2910	2730	3110	2880	2710
	400	3350	3160	3250	3020	2840	3240	3000	2820
	300	3680	3480	3580	3330	3130	3570	3300	3100
92 x 0.55	600	2670	2430	2590	2170	1860	2570	2130	1820
	450	2930	2770	2860	2650	2480	2840	2630	2420
	400	3050	2880	2970	2760	2590	2960	2740	2570
	300	3360	3180	3270	3030	2860	3250	3010	2830
92 x 0.75	600	2950	2780	2870	2660	2500	2850	2640	2480
	450	3240	3060	3150	2930	2760	3140	2910	2730
	400	3370	3190	3280	3050	2870	3270	3020	2840
	300	3710	3510	3610	3350	3160	3590	3330	3130
92 x 1.15	600	3390	3210	3300	3060	2880	3290	3040	2860
	450	3740	3530	3630	3370	3170	3620	3350	3150
	400	3890	3670	3780	3510	3300	3760	3480	3270
	300	4280	4040	4160	3860	3640	4140	3830	3600
150 x 0.75	600	4350	4100	4240	3670	3150	4220	3600	3070
	450	4670	4480	4580	4330	4080	4560	4300	4040
	400	4810	4610	4710	4460	4240	4700	4430	4200
	300	5170	4950	5060	4790	4580	5050	4760	4540
150 x 1.15	600	4830	4630	4730	4480	4260	4720	4450	4220
	450	5190	4980	5090	4810	4600	5070	4780	4560
	400	5350	5120	5240	4950	4730	5220	4930	4700
	300	5750	5510	5630	5320	5090	5610	5290	5050

Nogging Table

Ceiling Span (m)	Number of Noggings evenly spaced along ceiling joist
0 - 2.0	0
2.0 - 4.0	1
above 4.0	2

End Track Anchor Demand

1. Maximum anchor shear and tension demand = 1.48 kN
2. Anchors at maximum 1.5 x stud spacing up to 600mm maximum, and 100mm maximum from ends.
3. 150mm tracks require 2 anchors across width.

1. End Connection 1 is **Sliding** type EC2. End Connection 2 is **Fixed** type EC5. Refer to *Stud Ceiling End Connections* for end connection details including track BMT.
2. Table based upon downward (suction) and upward (uplift) pressures, for internal use only.
3. Table includes self weight and 2 kg/m^2 insulation weight with an additional 3 kg/m^2 service load. No further allowance for additional point loads or live loads.
4. Contact Siniat or a structural engineer to check ceiling for earthquake actions. Specific project information is required.
5. Table refers to Siniat steel studs of grade G300 steel with Zincalume™ AM150 or AM125 corrosion protection. Maximum production lengths available are 7.2m
6. Designed in accordance with *AS/NZS 4600:2018 Cold Formed Steel Structures.*
7. Wind pressures determined in accordance with *AS/NZS 1170.2 Wind Actions.*
8. Ultimate Load Case1: 1.2G + Wu (suction) + $Q_{0.03kPa\ Service\ Load}$
   Ultimate Load Case 2: 0.9G + Wu (uplift).
9. Serviceability Load Case 1: G with deflection limited to span/500
   Serviceability Load Case 2: G + Ws with deflection limited to span/360 or 12mm.
10. The nominated lateral pressures and deflection limits must be checked for suitability for a specific project.

Table 3 Single Span Internal Steel Stud Ceiling Span Table (mm) - REGION B

Refer to Blueprint Section 2.3 for assistance determining the relevant wind pressures for a specific project.

Steel stud ceiling lined on the underside only	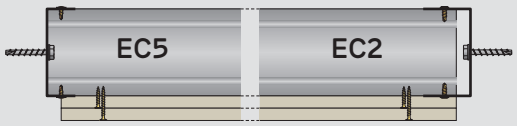	Up to BCA Building Importance Level 3	Ultimate pressure W_U (kPa)	0.59
			Serviceability pressure W_S (kPa)	0.25

Ceiling Stud Depth and BMT (mm)	Maximum Ceiling Stud Centres (mm)	1x10mm	2x10mm	1x13mm	2x13mm	3x13mm	1x16mm	2x16mm	3x16mm
64 x 0.5	600	2110	1830	2030	1770	1560	2020	1760	1520
	450	2320	2160	2240	2040	1850	2220	2030	1840
	400	2410	2250	2330	2130	1920	2310	2110	1900
	300	2650	2470	2560	2340	2180	2550	2320	2160
64 x 0.75	600	2400	2240	2320	2120	1960	2310	2100	1950
	450	2640	2460	2550	2330	2170	2540	2310	2150
	400	2750	2560	2660	2420	2260	2640	2400	2230
	300	3030	2820	2920	2670	2490	2910	2650	2460
64 x 1.15	600	2770	2580	2670	2440	2270	2660	2420	2250
	450	3050	2840	2940	2690	2500	2920	2660	2470
	400	3170	2950	3060	2790	2600	3040	2770	2570
	300	3490	3250	3370	3070	2860	3350	3050	2830
76 x 0.55	600	2490	2280	2400	2050	1770	2390	2020	1730
	450	2740	2550	2640	2410	2250	2630	2390	2220
	400	2850	2650	2750	2510	2340	2730	2490	2310
	300	3130	2920	3020	2760	2570	3010	2740	2540
76 x 0.75	600	2790	2590	2690	2460	2290	2670	2430	2260
	450	3070	2860	2960	2700	2520	2940	2680	2490
	400	3190	2970	3080	2810	2620	3060	2790	2590
	300	3510	3270	3390	3100	2880	3370	3070	2850
76 x 1.15	600	3180	2960	3070	2800	2610	3050	2770	2580
	450	3500	3260	3380	3080	2870	3360	3050	2840
	400	3640	3390	3510	3210	2980	3490	3180	2950
	300	4000	3730	3860	3530	3290	3840	3500	3250
92 x 0.55	600	2590	2280	2440	2050	1770	2410	2020	1730
	450	3190	2970	3080	2740	2370	3060	2690	2310
	400	3320	3090	3200	2920	2660	3180	2900	2600
	300	3650	3400	3530	3220	3000	3510	3190	2970
92 x 0.75	600	3200	2980	3090	2820	2630	3070	2800	2600
	450	3520	3280	3400	3110	2890	3380	3080	2860
	400	3660	3410	3540	3230	3010	3520	3200	2980
	300	4030	3760	3900	3560	3310	3870	3530	3280
92 x 1.15	600	3690	3430	3560	3250	3030	3540	3220	3000
	450	4060	3780	3920	3580	3330	3900	3550	3300
	400	4220	3930	4080	3720	3470	4050	3690	3430
	300	4560	4330	4440	4100	3820	4420	4060	3770
150 x 0.75	600	4380	3840	4120	3470	3000	4080	3410	2930
	450	4970	4710	4840	4520	4000	4820	4490	3860
	400	5120	4850	4990	4660	4420	4970	4630	4380
	300	5500	5220	5360	5010	4750	5340	4970	4710
150 x 1.15	600	5140	4870	5010	4680	4440	4990	4650	4400
	450	5530	5240	5380	5030	4770	5360	4990	4730
	400	5690	5400	5540	5180	4910	5520	5140	4870
	300	6120	5800	5960	5570	5280	5930	5530	5230

Nogging Table

Ceiling Span (m)	Number of Noggings evenly spaced along ceiling joist
0 - 2.0	0
2.0 - 4.0	1
above 4.0	2

End Track Anchor Demand

1. Maximum anchor shear and tension demand = 1.61 kN
2. Anchors at maximum 1.5 x stud spacing up to 600mm maximum, and 100mm maximum from ends.
3. 150mm tracks require 2 anchors across width.

1. End Connection 1 is **Sliding** type EC2. End Connection 2 is **Fixed** type EC5. Refer to *Stud Ceiling End Connections* for end connection details including track BMT.
2. Table based upon downward (suction) and upward (uplift) pressures, for internal use only.
3. Table includes self weight and 2 kg/m^2 insulation weight with an additional 3 kg/m^2 service load. No further allowance for additional point loads or live loads.
4. Contact Siniat or a structural engineer to check ceiling for earthquake actions. Specific project information is required.
5. Table refers to Siniat steel studs of grade G300 steel with Zincalume™ AM150 or AM125 corrosion protection. Maximum production lengths available are 7.2m
6. Designed in accordance with *AS/NZS 4600:2018 Cold Formed Steel Structures.*
7. Wind pressures determined in accordance with *AS/NZS 1170.2 Wind Actions.*
8. Ultimate Load Case1: 1.2G + Wu (suction) + $Q_{0.03kPa\ Service\ Load}$
   Ultimate Load Case 2: 0.9G + Wu (uplift).
9. Serviceability Load Case 1: G with deflection limited to span/500
   Serviceability Load Case 2: G + Ws with deflection limited to span/360 or 12mm.
10. The nominated lateral pressures and deflection limits must be checked for suitability for a specific project.

Table 4 Single Span Internal Steel Stud Ceiling Span Table (mm) - REGION B

Refer to Blueprint Section 2.3 for assistance determining the relevant wind pressures for a specific project.

Steel stud ceiling lined on the underside only	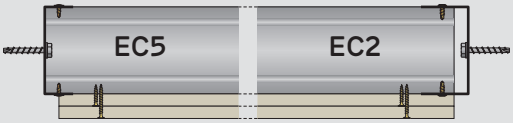	Up to BCA Building Importance Level 3	Ultimate pressure W_U (kPa)	0.83
			Serviceability pressure W_S (kPa)	0.35

Ceiling Stud Depth and BMT (mm)	Maximum Ceiling Stud Centres (mm)	1x10mm	2x10mm	1x13mm	2x13mm	3x13mm	1x16mm	2x16mm	3x16mm
64 x 0.5	600	1720	1560	1640	1440	1280	1630	1420	1250
	450	2130	2020	2070	1800	1700	2070	1790	1670
	400	2220	2100	2160	2000	1800	2150	1860	1790
	300	2440	2310	2380	2210	2080	2360	2190	2060
64 x 0.75	600	2210	2090	2150	2000	1860	2140	1910	1850
	450	2430	2300	2370	2200	2070	2360	2180	2050
	400	2530	2390	2460	2290	2150	2450	2270	2130
	300	2790	2630	2710	2520	2370	2700	2500	2350
64 x 1.15	600	2550	2410	2480	2300	2160	2470	2280	2140
	450	2800	2650	2730	2530	2380	2710	2510	2360
	400	2920	2750	2840	2630	2480	2820	2610	2450
	300	3210	3030	3120	2900	2730	3110	2880	2700
76 x 0.55	600	1940	1780	1870	1630	1450	1850	1610	1420
	450	2520	2370	2450	2180	1940	2440	2150	1900
	400	2620	2470	2550	2360	2180	2540	2350	2140
	300	2880	2720	2800	2600	2450	2790	2580	2430
76 x 0.75	600	2560	2420	2490	2320	2180	2480	2300	2160
	450	2820	2670	2750	2550	2400	2730	2530	2380
	400	2940	2770	2860	2650	2490	2840	2630	2470
	300	3230	3050	3140	2920	2750	3130	2900	2720
76 x 1.15	600	2920	2760	2840	2640	2480	2830	2620	2460
	450	3220	3040	3130	2910	2730	3110	2880	2710
	400	3350	3160	3250	3020	2840	3240	3000	2820
	300	3680	3480	3580	3330	3130	3570	3300	3100
92 x 0.55	600	1960	1780	1870	1630	1450	1850	1610	1420
	450	2610	2370	2490	2180	1940	2470	2150	1900
	400	2940	2670	2810	2450	2180	2780	2420	2140
	300	3360	3180	3270	3030	2860	3250	3010	2830
92 x 0.75	600	2950	2780	2870	2660	2460	2850	2640	2410
	450	3240	3060	3150	2930	2760	3140	2910	2730
	400	3370	3190	3280	3050	2870	3270	3020	2840
	300	3710	3510	3610	3350	3160	3590	3330	3130
92 x 1.15	600	3390	3210	3300	3060	2880	3290	3040	2860
	450	3740	3530	3630	3370	3170	3620	3350	3150
	400	3890	3670	3780	3510	3300	3760	3480	3270
	300	4280	4040	4160	3860	3640	4140	3830	3600
150 x 0.75	600	3310	3000	3160	2770	2460	3140	2730	2410
	450	4420	4010	4220	3690	3280	4180	3640	3220
	400	4700	4510	4610	4150	3690	4600	4090	3620
	300	5170	4950	5060	4790	4320	5050	4760	4240
150 x 1.15	600	4830	4630	4730	4480	4260	4720	4450	4220
	450	5190	4980	5090	4810	4600	5070	4780	4560
	400	5350	5120	5240	4950	4730	5220	4930	4700
	300	5750	5510	5630	5320	5090	5610	5290	5050

Nogging Table

Ceiling Span (m)	Number of Noggings evenly spaced along ceiling joist
0 - 2.0	0
2.0 - 4.0	1
above 4.0	2

End Track Anchor Demand

1. Maximum anchor shear and tension demand = 1.89 kN
2. Anchors at maximum 1.5 x stud spacing up to 600mm maximum, and 100mm maximum from ends.
3. 150mm tracks require 2 anchors across width.

1. End Connection 1 is **Sliding** type EC2. End Connection 2 is **Fixed** type EC5. Refer to *Stud Ceiling End Connections* for end connection details including track BMT.
2. Table based upon downward (suction) and upward (uplift) pressures, for internal use only.
3. Table includes self weight and 2 kg/m^2 insulation weight with an additional 3 kg/m^2 service load. No further allowance for additional point loads or live loads.
4. Contact Siniat or a structural engineer to check ceiling for earthquake actions. Specific project information is required.
5. Table refers to Siniat steel studs of grade G300 steel with Zincalume™ AM150 or AM125 corrosion protection. Maximum production lengths available are 7.2m
6. Designed in accordance with *AS/NZS 4600:2018 Cold Formed Steel Structures.*
7. Wind pressures determined in accordance with *AS/NZS 1170.2 Wind Actions.*
8. Ultimate Load Case1: 1.2G + Wu (suction) + $Q_{0.03kPa\ Service\ Load}$
   Ultimate Load Case 2: 0.9G + Wu (uplift).
9. Serviceability Load Case 1: G with deflection limited to span/500
   Serviceability Load Case 2: G + Ws with deflection limited to span/360 or 12mm.
10. The nominated lateral pressures and deflection limits must be checked for suitability for a specific project.

Table 5 2-or-more Span Internal Steel Stud Ceiling Span Table (mm) - REGION A

Refer to Blueprint Section 2.3 for assistance determining the relevant wind pressures for a specific project.

Steel stud ceiling lined on the underside only	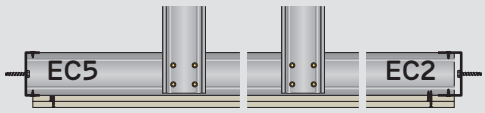			Up to BCA Building Importance Level 3	Ultimate pressure W_U (kPa)		0.39
					Serviceability pressure W_S (kPa)		0.25
Ceiling Stud Depth and BMT (mm)	**Maximum Ceiling Stud Centres (mm)**	**1 layer** up to 13 kg/m²	Intermediate Support Demand (kN)	**2 layers** up to 26 kg/m²	Intermediate Support Demand (kN)	**3 layers** up to 39 kg/m²	Intermediate Support Demand (kN)
64 x 0.5	600	2030	0.91	1890	1.07	1780	1.22
	450	2190	0.74	2060	0.88	1950	1.00
	400	2260	0.68	2130	0.81	2020	0.92
	300	2430	0.55	2290	0.65	2190	0.75
64 x 0.75	600	2290	1.03	2160	1.22	2050	1.40
	450	2470	0.83	2320	0.99	2210	1.13
	400	2550	0.77	2400	0.91	2280	1.04
	300	2750	0.62	2590	0.73	2460	0.84
64 x 1.15	600	2660	1.20	2500	1.42	2370	1.62
	450	2890	0.98	2700	1.15	2570	1.32
	400	2980	0.89	2800	1.06	2650	1.21
	300	3240	0.73	3030	0.86	2870	0.98
76 x 0.55	600	2220	1.00	2090	1.19	1990	1.36
	450	2390	0.81	2250	0.96	2150	1.10
	400	2460	0.74	2320	0.88	2210	1.01
	300	2650	0.60	2500	0.71	2380	0.81
76 x 0.75	600	2520	1.13	2370	1.34	2260	1.55
	450	2710	0.91	2560	1.09	2430	1.25
	400	2800	0.84	2640	1.00	2510	1.14
	300	3020	0.68	2840	0.81	2710	0.93
76 x 1.15	600	2840	1.28	2660	1.51	2530	1.73
	450	3070	1.04	2880	1.22	2740	1.41
	400	3170	0.95	2980	1.13	2830	1.29
	300	3440	0.77	3220	0.91	3060	1.05
92 x 0.55	600	2400	1.08	2260	1.28	2130	1.46
	450	2590	0.87	2440	1.04	2330	1.20
	400	2670	0.80	2510	0.95	2400	1.09
	300	2870	0.65	2700	0.77	2580	0.88
92 x 0.75	600	2600	1.17	2450	1.39	2340	1.60
	450	2800	0.95	2640	1.12	2520	1.29
	400	2890	0.87	2720	1.03	2590	1.18
	300	3120	0.70	2930	0.83	2800	0.96
92 x 1.15	600	2990	1.35	2810	1.59	2670	1.83
	450	3240	1.09	3040	1.29	2890	1.48
	400	3340	1.00	3140	1.19	2980	1.36
	300	3620	0.81	3390	0.96	3220	1.10
150 x 0.75	600	3060	1.38	2890	1.64	2750	1.88
	450	3290	1.11	3110	1.32	2960	1.52
	400	3390	1.02	3200	1.21	3050	1.39
	300	3650	0.82	3440	0.98	3280	1.12
150 x 1.15	600	3460	1.56	3260	1.85	3100	2.12
	450	3740	1.26	3520	1.50	3350	1.72
	400	3860	1.16	3630	1.37	3450	1.57
	300	4160	0.94	3910	1.11	3720	1.27

Noggings

Spans in this table do not require noggings

End Track Anchor Demand

1. Maximum anchor shear and tension demand = 0.68 kN
2. Anchors at maximum 1.5 x stud spacing up to 600mm maximum, and 100mm maximum from ends.
3. 150mm tracks require 2 anchors across width.

Intermediate Support

Stud BMT	Soffit Connection (kN)						
	SC1	SC2 2x10g screws	SC2 3x10g screws	SC2 4x10g screws	SC3 2x10g screws	SC3 3x10g screws	SC3 4x10g screws
0.5	0.51	1.08	1.62	2.16	1.08	1.62	2.16
0.55	0.61	1.26	1.89	2.50	1.26	1.89	2.52
0.75	0.96	2.00	2.50	2.50	2.00	3.00	4.00
1.15	1.68	2.50	2.50	2.50	3.80	5.70	7.60

1. End Connection 1 is **Sliding** type EC2. End Connection 2 is **Fixed** type EC5. Refer to *Stud Ceiling End Connections* for end connection details including track BMT.
2. Table based upon downward (suction) and upward (uplift) pressures, for internal use only.
3. Table includes self weight and 2 kg/m² insulation weight with an additional 3 kg/m² service load. No further allowance for additional point loads or live loads.
4. Contact Siniat or a structural engineer to check ceiling for earthquake actions. Specific project information is required.
5. Table refers to Siniat steel studs of grade G300 steel with Zincalume™ AM150 or AM125 corrosion protection. Maximum production lengths available are 7.2m
6. Designed in accordance with *AS/NZS 4600:2018 Cold Formed Steel Structures.*
7. Wind pressures determined in accordance with *AS/NZS 1170.2 Wind Actions.*
8. Ultimate Load Case1: 1.2G + Wu (suction) + $Q_{0.03kPa\ Service\ Load}$
   Ultimate Load Case 2: 0.9G + Wu (uplift).
9. Serviceability Load Case 1: G with deflection limited to span/500
   Serviceability Load Case 2: G + Ws with deflection limited to span/360 or 12mm
10. For anchors used with intermediate supports, refer to the *Siniat Anchor Product Data Sheet* on current capacity information into concrete.
11. The nominated lateral pressures and deflection limits must be checked for suitability for a specific project.

Table 6 2-or-more Span Internal Steel Stud Ceiling Span Table (mm) - REGION A

Refer to Blueprint Section 2.3 for assistance determining the relevant wind pressures for a specific project.

Steel stud ceiling lined on the underside only				Up to BCA Building Importance Level 3	Ultimate pressure W_U (kPa)		0.54
					Serviceability pressure W_S (kPa)		0.35
Ceiling Stud Depth and BMT (mm)	**Maximum Ceiling Stud Centres (mm)**	**1 layer** up to 13 kg/m²	Intermediate Support Demand (kN)	**2 layers** up to 26 kg/m²	Intermediate Support Demand (kN)	**3 layers** up to 39 kg/m²	Intermediate Support Demand (kN)
64 x 0.5	600	1900	1.07	1790	1.22	1700	1.35
	450	2070	0.87	1950	0.99	1860	1.11
	400	2130	0.80	2020	0.92	1930	1.02
	300	2300	0.65	2190	0.74	2100	0.84
64 x 0.75	600	2160	1.22	2060	1.40	1970	1.57
	450	2330	0.98	2220	1.13	2130	1.27
	400	2400	0.90	2290	1.04	2190	1.16
	300	2590	0.73	2470	0.84	2360	0.94
64 x 1.15	600	2500	1.41	2380	1.62	2280	1.82
	450	2710	1.14	2570	1.31	2460	1.47
	400	2800	1.05	2660	1.20	2540	1.35
	300	3040	0.86	2880	0.98	2750	1.10
76 x 0.55	600	2100	1.18	1990	1.35	1900	1.51
	450	2250	0.95	2150	1.10	2060	1.23
	400	2320	0.87	2210	1.00	2130	1.13
	300	2500	0.70	2380	0.81	2290	0.91
76 x 0.75	600	2380	1.34	2260	1.54	2170	1.73
	450	2560	1.08	2440	1.24	2340	1.40
	400	2640	0.99	2510	1.14	2410	1.28
	300	2850	0.80	2710	0.92	2600	1.04
76 x 1.15	600	2670	1.50	2540	1.73	2430	1.94
	450	2890	1.22	2740	1.40	2630	1.57
	400	2980	1.12	2830	1.28	2710	1.44
	300	3230	0.91	3070	1.04	2930	1.17
92 x 0.55	600	2260	1.27	2140	1.45	2040	1.62
	450	2440	1.03	2330	1.19	2220	1.33
	400	2520	0.95	2400	1.09	2300	1.22
	300	2710	0.76	2580	0.88	2480	0.99
92 x 0.75	600	2460	1.38	2340	1.59	2250	1.79
	450	2650	1.12	2520	1.28	2420	1.45
	400	2730	1.02	2600	1.18	2490	1.32
	300	2940	0.83	2800	0.95	2690	1.07
92 x 1.15	600	2820	1.59	2680	1.82	2570	2.05
	450	3050	1.29	2890	1.47	2770	1.65
	400	3140	1.18	2990	1.35	2860	1.52
	300	3400	0.96	3230	1.10	3090	1.23
150 x 0.75	600	2890	1.63	2760	1.88	2650	2.11
	450	3110	1.31	2960	1.51	2850	1.70
	400	3210	1.20	3060	1.39	2930	1.56
	300	3450	0.97	3290	1.12	3160	1.26
150 x 1.15	600	3270	1.84	3110	2.11	2980	2.37
	450	3520	1.49	3350	1.71	3220	1.92
	400	3630	1.36	3460	1.57	3320	1.76
	300	3920	1.10	3730	1.27	3580	1.43

Noggings

Spans in this table do not require noggings

End Track Anchor Demand

1. Maximum anchor shear and tension demand = 0.76 kN
2. Anchors at maximum 1.5 x stud spacing up to 600mm maximum, and 100mm maximum from ends.
3. 150mm tracks require 2 anchors across width.

Intermediate Support

Stud BMT	Soffit Connection (kN)						
	SC1	SC2 2x10g screws	SC2 3x10g screws	SC2 4x10g screws	SC3 2x10g screws	SC3 3x10g screws	SC3 4x10g screws
0.5	0.51	1.08	1.62	2.16	1.08	1.62	2.16
0.55	0.61	1.26	1.89	2.50	1.26	1.89	2.52
0.75	0.96	2.00	2.50	2.50	2.00	3.00	4.00
1.15	1.68	2.50	2.50	2.50	3.80	5.70	7.60

1. End Connection 1 is **Sliding** type EC2. End Connection 2 is **Fixed** type EC5. Refer to *Stud Ceiling End Connections* for end connection details including track BMT.
2. Table based upon downward (suction) and upward (uplift) pressures, for internal use only.
3. Table includes self weight and 2 kg/m² insulation weight with an additional 3 kg/m² service load. No further allowance for additional point loads or live loads.
4. Contact Siniat or a structural engineer to check ceiling for earthquake actions. Specific project information is required.
5. Table refers to Siniat steel studs of grade G300 steel with Zincalume™ AM150 or AM125 corrosion protection. Maximum production lengths available are 7.2m
6. Designed in accordance with *AS/NZS 4600:2018 Cold Formed Steel Structures.*
7. Wind pressures determined in accordance with *AS/NZS 1170.2 Wind Actions.*
8. Ultimate Load Case1: 1.2G + Wu (suction) + $Q_{0.03kPa\ Service\ Load}$
   Ultimate Load Case 2: 0.9G + Wu (uplift).
9. Serviceability Load Case 1: G with deflection limited to span/500
   Serviceability Load Case 2: G + Ws with deflection limited to span/360 or 12mm
10. For anchors used with intermediate supports, refer to the *Siniat Anchor Product Data Sheet* on current capacity information into concrete.
11. The nominated lateral pressures and deflection limits must be checked for suitability for a specific project.

Table 7 2-or-more Span Internal Steel Stud Ceiling Span Table (mm) - REGION B

Refer to Blueprint Section 2.3 for assistance determining the relevant wind pressures for a specific project.

Steel stud ceiling lined on the underside only	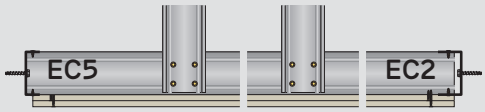			Up to BCA Building Importance Level 3	Ultimate pressure W_U (kPa)		0.59
					Serviceability pressure W_S (kPa)		0.25
Ceiling Stud Depth and BMT (mm)	**Maximum Ceiling Stud Centres (mm)**	**1 layer** up to 13 kg/m²	Intermediate Support Demand (kN)	**2 layers** up to 26 kg/m²	Intermediate Support Demand (kN)	**3 layers** up to 39 kg/m²	Intermediate Support Demand (kN)
64 x 0.5	600	1860	1.12	1760	1.26	1670	1.39
	450	2030	0.91	1920	1.03	1840	1.15
	400	2100	0.84	1990	0.95	1900	1.06
	300	2260	0.68	2160	0.77	2070	0.86
64 x 0.75	600	2120	1.27	2030	1.46	1950	1.63
	450	2290	1.03	2190	1.18	2100	1.31
	400	2360	0.94	2250	1.08	2170	1.21
	300	2550	0.77	2430	0.87	2340	0.98
64 x 1.15	600	2460	1.48	2340	1.68	2250	1.88
	450	2660	1.20	2530	1.36	2430	1.52
	400	2750	1.10	2620	1.25	2510	1.40
	300	2980	0.89	2840	1.02	2720	1.13
76 x 0.55	600	2060	1.24	1960	1.41	1870	1.56
	450	2220	1.00	2120	1.14	2040	1.28
	400	2290	0.92	2180	1.04	2100	1.17
	300	2460	0.74	2350	0.84	2260	0.94
76 x 0.75	600	2340	1.40	2230	1.60	2150	1.79
	450	2520	1.13	2410	1.30	2310	1.44
	400	2600	1.04	2480	1.19	2380	1.32
	300	2800	0.84	2670	0.96	2570	1.07
76 x 1.15	600	2620	1.57	2500	1.79	2400	2.00
	450	2840	1.28	2700	1.45	2590	1.62
	400	2930	1.17	2790	1.33	2680	1.49
	300	3170	0.95	3020	1.08	2900	1.21
92 x 0.55	600	2220	1.33	2100	1.51	2010	1.68
	450	2400	1.08	2290	1.23	2190	1.37
	400	2480	0.99	2370	1.13	2270	1.26
	300	2670	0.80	2550	0.91	2450	1.02
92 x 0.75	600	2420	1.45	2310	1.66	2220	1.85
	450	2600	1.17	2490	1.34	2390	1.49
	400	2680	1.07	2560	1.22	2470	1.37
	300	2890	0.87	2760	0.99	2660	1.11
92 x 1.15	600	2770	1.66	2640	1.89	2540	2.12
	450	2990	1.35	2850	1.53	2740	1.71
	400	3090	1.24	2940	1.41	2830	1.57
	300	3340	1.00	3180	1.14	3060	1.28
150 x 0.75	600	2840	1.70	2720	1.95	2620	2.19
	450	3060	1.38	2920	1.57	2810	1.76
	400	3150	1.26	3010	1.44	2900	1.61
	300	3390	1.02	3240	1.16	3120	1.30
150 x 1.15	600	3210	1.93	3070	2.20	2950	2.46
	450	3460	1.56	3310	1.78	3180	1.99
	400	3570	1.43	3410	1.63	3280	1.82
	300	3860	1.16	3680	1.32	3530	1.47

Noggings

Spans in this table do not require noggings

End Track Anchor Demand

1. Maximum anchor shear and tension demand = 0.79 kN
2. Anchors at maximum 1.5 x stud spacing up to 600mm maximum, and 100mm maximum from ends.
3. 150mm tracks require 2 anchors across width.

Intermediate Support

Stud BMT	Soffit Connection (kN)						
	SC1	SC2 2x10g screws	SC2 3x10g screws	SC2 4x10g screws	SC3 2x10g screws	SC3 3x10g screws	SC3 4x10g screws
0.5	0.51	1.08	1.62	2.16	1.08	1.62	2.16
0.55	0.61	1.26	1.89	2.50	1.26	1.89	2.52
0.75	0.96	2.00	2.50	2.50	2.00	3.00	4.00
1.15	1.68	2.50	2.50	2.50	3.80	5.70	7.60

1. End Connection 1 is **Sliding** type EC2. End Connection 2 is **Fixed** type EC5. Refer to *Stud Ceiling End Connections* for end connection details including track BMT.
2. Table based upon downward (suction) and upward (uplift) pressures, for internal use only.
3. Table includes self weight and 2 kg/m² insulation weight with an additional 3 kg/m² service load. No further allowance for additional point loads or live loads.
4. Contact Siniat or a structural engineer to check ceiling for earthquake actions. Specific project information is required.
5. Table refers to Siniat steel studs of grade G300 steel with Zincalume™ AM150 or AM125 corrosion protection. Maximum production lengths available are 7.2m
6. Designed in accordance with *AS/NZS 4600:2018 Cold Formed Steel Structures.*
7. Wind pressures determined in accordance with *AS/NZS 1170.2 Wind Actions.*
8. Ultimate Load Case1: 1.2G + Wu (suction) + $Q_{0.03kPa\ Service\ Load}$
   Ultimate Load Case 2: 0.9G + Wu (uplift).
9. Serviceability Load Case 1: G with deflection limited to span/500
   Serviceability Load Case 2: G + Ws with deflection limited to span/360 or 12mm
10. For anchors used with intermediate supports, refer to the *Siniat Anchor Product Data Sheet* on current capacity information into concrete.
11. The nominated lateral pressures and deflection limits must be checked for suitability for a specific project.

Table 8 2-or-more Span Internal Steel Stud Ceiling Span Table (mm) - REGION B

Refer to Blueprint Section 2.3 for assistance determining the relevant wind pressures for a specific project.

Steel stud ceiling lined on the underside only				Up to BCA Building Importance Level 3	Ultimate pressure W_U (kPa)		0.83
					Serviceability pressure W_S (kPa)		0.35
Ceiling Stud Depth and BMT (mm)	**Maximum Ceiling Stud Centres (mm)**	**1 layer** up to 13 kg/m²	Intermediate Support Demand (kN)	**2 layers** up to 26 kg/m²	Intermediate Support Demand (kN)	**3 layers** up to 39 kg/m²	Intermediate Support Demand (kN)
64 x 0.5	600	1710	1.33	1630	1.46	1560	1.58
	450	1870	1.09	1790	1.20	1720	1.31
	400	1940	1.01	1860	1.11	1790	1.21
	300	2110	0.82	2030	0.91	1960	0.99
64 x 0.75	600	1980	1.54	1910	1.71	1850	1.88
	450	2140	1.25	2060	1.39	2000	1.52
	400	2200	1.14	2130	1.27	2060	1.39
	300	2380	0.93	2290	1.03	2220	1.13
64 x 1.15	600	2290	1.79	2200	1.97	2130	2.16
	450	2480	1.45	2380	1.60	2300	1.75
	400	2560	1.33	2460	1.47	2380	1.61
	300	2770	1.08	2670	1.20	2580	1.31
76 x 0.55	600	1910	1.49	1830	1.64	1760	1.78
	450	2070	1.21	2000	1.35	1930	1.47
	400	2140	1.11	2060	1.23	2000	1.35
	300	2300	0.90	2220	1.00	2150	1.09
76 x 0.75	600	2190	1.71	2110	1.89	2040	2.07
	450	2350	1.37	2270	1.53	2200	1.67
	400	2430	1.26	2340	1.40	2270	1.53
	300	2610	1.02	2520	1.13	2440	1.24
76 x 1.15	600	2440	1.90	2350	2.11	2280	2.31
	450	2640	1.54	2540	1.71	2460	1.87
	400	2730	1.42	2630	1.57	2540	1.72
	300	2950	1.15	2840	1.27	2750	1.39
92 x 0.55	600	2050	1.60	1970	1.77	1780	1.80
	450	2240	1.31	2150	1.45	2070	1.57
	400	2320	1.21	2220	1.33	2140	1.45
	300	2490	0.97	2410	1.08	2330	1.18
92 x 0.75	600	2260	1.76	2180	1.96	2110	2.14
	450	2430	1.42	2350	1.58	2270	1.73
	400	2510	1.31	2420	1.45	2340	1.58
	300	2700	1.05	2610	1.17	2520	1.28
92 x 1.15	600	2580	2.01	2490	2.23	2410	2.44
	450	2790	1.63	2690	1.81	2600	1.98
	400	2880	1.50	2770	1.66	2680	1.81
	300	3110	1.21	3000	1.35	2900	1.47
150 x 0.75	600	2660	2.07	2560	2.30	2470	2.50
	450	2860	1.67	2760	1.86	2680	2.04
	400	2950	1.53	2850	1.70	2760	1.87
	300	3170	1.24	3060	1.37	2970	1.51
150 x 1.15	600	3000	2.34	2890	2.59	2800	2.84
	450	3230	1.89	3120	2.10	3020	2.30
	400	3340	1.74	3220	1.93	3110	2.10
	300	3600	1.40	3470	1.56	3360	1.70

Noggings

Spans in this table do not require noggings

End Track Anchor Demand

1. Maximum anchor shear and tension demand = 0.91 kN
2. Anchors at maximum 1.5 x stud spacing up to 600mm maximum, and 100mm maximum from ends.
3. 150mm tracks require 2 anchors across width.

Intermediate Support

Stud BMT	Soffit Connection (kN)						
	SC1	SC2 2x10g screws	SC2 3x10g screws	SC2 4x10g screws	SC3 2x10g screws	SC3 3x10g screws	SC3 4x10g screws
0.5	0.51	1.08	1.62	2.16	1.08	1.62	2.16
0.55	0.61	1.26	1.89	2.50	1.26	1.89	2.52
0.75	0.96	2.00	2.50	2.50	2.00	3.00	4.00
1.15	1.68	2.50	2.50	2.50	3.80	5.70	7.60

1. End Connection 1 is **Sliding** type EC2. End Connection 2 is **Fixed** type EC5. Refer to *Stud Ceiling End Connections* for end connection details including track BMT.
2. Table based upon downward (suction) and upward (uplift) pressures, for internal use only.
3. Table includes self weight and 2 kg/m² insulation weight with an additional 3 kg/m² service load. No further allowance for additional point loads or live loads.
4. Contact Siniat or a structural engineer to check ceiling for earthquake actions. Specific project information is required.
5. Table refers to Siniat steel studs of grade G300 steel with Zincalume™ AM150 or AM125 corrosion protection. Maximum production lengths available are 7.2m
6. Designed in accordance with *AS/NZS 4600:2018 Cold Formed Steel Structures.*
7. Wind pressures determined in accordance with *AS/NZS 1170.2 Wind Actions.*
8. Ultimate Load Case1: 1.2G + Wu (suction) + $Q_{0.03kPa\ Service\ Load}$
   Ultimate Load Case 2: 0.9G + Wu (uplift).
9. Serviceability Load Case 1: G with deflection limited to span/500
   Serviceability Load Case 2: G + Ws with deflection limited to span/360 or 12mm
10. For anchors used with intermediate supports, refer to the *Siniat Anchor Product Data Sheet* on current capacity information into concrete.
11. The nominated lateral pressures and deflection limits must be checked for suitability for a specific project.

Table 9 Single Span Internal Steel Stud Ceiling Span Table (mm) - REGION A

Refer to Blueprint Section 2.3 for assistance determining the relevant wind pressures for a specific project.

Steel stud ceiling lined above and below	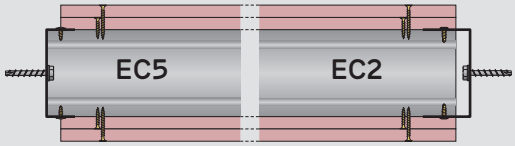	Up to BCA Building Importance Level 3	Ultimate pressure W_U (kPa)	0.54
			Serviceability pressure W_S (kPa)	0.35

Ceiling Stud Depth and BMT (mm)	Maximum Ceiling Stud Centres (mm)	System Number			
		SSC4	SSC9, SSC10, SSC11	SSC2, SSC12	SSC3
64 x 0.5	450	2260	2070	1860	1640
	400	2360	2160	2020	1850
	300	2650	2410	2260	2130
64 x 0.75	450	2520	2300	2160	2050
	400	2630	2400	2260	2140
	300	2940	2670	2510	2380
64 x 1.15	450	2840	2590	2440	2320
	400	2970	2710	2550	2420
	300	3300	3010	2830	2690
76 x 0.55	450	2680	2420	2110	1870
	400	2810	2550	2380	2110
	300	3140	2850	2670	2530
76 x 0.75	450	2940	2680	2520	2390
	400	3080	2800	2630	2490
	300	3440	3120	2930	2780
76 x 1.15	450	3290	2990	2820	2670
	400	3430	3130	2940	2790
	300	3820	3480	3270	3100
92 x 0.55	450	3020	2420	2110	1870
	400	3330	2730	2380	2110
	300	3730	3380	3160	2810
92 x 0.75	450	3440	3120	2930	2770
	400	3600	3270	3060	2900
	300	4020	3640	3420	3230
92 x 1.15	450	3870	3510	3300	3130
	400	4040	3670	3450	3270
	300	4430	4080	3830	3630
150 x 0.75	450	5020	4100	3570	3160
	400	5180	4610	4020	3560
	300	5560	5180	4700	4170
150 x 1.15	450	5420	5050	4830	4640
	400	5580	5200	4980	4790
	300	5980	5590	5350	5150

*Greater span possible using **Sliding** type EC4 end connection. Contact Siniat if required.

Nogging Table

Ceiling Span (m)	Number of Noggings evenly spaced along ceiling joist
0 - 2.0	0
2.0 - 4.0	1
above 4.0	2

End Track Anchor Demand

1. Maximum anchor shear and tension demand = 1.64 kN
2. Anchors at maximum 1.5 x stud spacing up to 600mm maximum, and 100mm maximum from ends.
3. 150mm tracks require 2 anchors across width.

1. End Connection 1 is **Sliding** type EC2. End Connection 2 is **Fixed** type EC5. Refer to *Stud Ceiling End Connections* for end connection details including track BMT.
2. Table based upon downward (suction) and upward (uplift) pressures, for internal use only.
3. Table includes self weight and 2 kg/m^2 insulation weight with an additional 3 kg/m^2 service load. No further allowance for additional point loads or live loads.
4. Contact Siniat or a structural engineer to check ceiling for earthquake actions. Specific project information is required.
5. Table refers to Siniat steel studs of grade G300 steel with Zincalume™ AM150 or AM125 corrosion protection. Maximum production lengths available are 7.2m
6. Designed in accordance with *AS/NZS 4600:2018 Cold Formed Steel Structures.*
7. Wind pressures determined in accordance with *AS/NZS 1170.2 Wind Actions.*
8. Ultimate Load Case1: 1.2G + Wu (suction) + $Q_{0.03kPa\ Service\ Load}$
   Ultimate Load Case 2: 0.9G + Wu (uplift).
9. Serviceability Load Case 1: G with deflection limited to span/500
   Serviceability Load Case 2: G + Ws with deflection limited to span/360 or 12mm.
10. The nominated lateral pressures and deflection limits must be checked for suitability for a specific project.

Table 10 Single Span Internal Steel Stud Ceiling Span Table (mm) - REGION B

Refer to Blueprint Section 2.3 for assistance determining the relevant wind pressures for a specific project.

Steel stud ceiling lined above and below	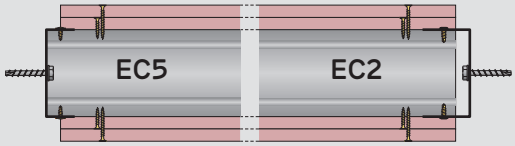	Up to BCA Building Importance Level 3	Ultimate pressure W_U (kPa)	0.83
			Serviceability pressure W_S (kPa)	0.35

Ceiling Stud Depth and BMT (mm)	Maximum Ceiling Stud Centres (mm)	System Number			
		SSC4	SSC9, SSC10, SSC11	SSC2, SSC12	SSC3
64 x 0.5	450	1980	1670	1500	1360
	400	2140	1880	1690	1530
	300	2470	2270	2150	2040
64 x 0.75	450	2520	2300	2160	2050
	400	2630	2400	2260	2140
	300	2940	2670	2510	2380
64 x 1.15	450	2840	2590	2440	2320
	400	2970	2710	2550	2420
	300	3300	3010	2830	2690
76 x 0.55	450	2250	1900	1700	1540
	400	2500	2140	1920	1740
	300	2880	2650	2510	2320
76 x 0.75	450	2940	2680	2520	2390
	400	3080	2800	2630	2490
	300	3440	3120	2930	2780
76 x 1.15	450	3290	2990	2820	2670
	400	3430	3130	2940	2790
	300	3820	3480	3270	3100
92 x 0.55	450	2250	1900	1700	1540
	400	2540	2140	1920	1740
	300	3350	2850	2560	2320
92 x 0.75	450	3390	3120	2880	2610
	400	3600	3270	3060	2900
	300	4020	3640	3420	3230
92 x 1.15	450	3870	3510	3300	3130
	400	4040	3670	3450	3270
	300	4430	4080	3830	3630
150 x 0.75	450	3810	3220	2880	2610
	400	4290	3620	3240	2940
	300	5020	4240	3800	3440
150 x 1.15	450	5420	5050	4830	4640
	400	5580	5200	4980	4790
	300	5980	5590	5350	5150

*Greater span possible using **Sliding** type EC4 end connection. Contact Siniat if required.

Nogging Table

Ceiling Span (m)	Number of Noggings evenly spaced along ceiling joist
0 - 2.0	0
2.0 - 4.0	1
above 4.0	2

End Track Anchor Demand

1. Maximum anchor shear and tension demand = 1.64 kN
2. Anchors at maximum 1.5 x stud spacing up to 600mm maximum, and 100mm maximum from ends.
3. 150mm tracks require 2 anchors across width.

1. End Connection 1 is **Sliding** type EC2. End Connection 2 is **Fixed** type EC5. Refer to *Stud Ceiling End Connections* for end connection details including track BMT.
2. Table based upon downward (suction) and upward (uplift) pressures, for internal use only.
3. Table includes self weight and 2 kg/m^2 insulation weight with an additional 3 kg/m^2 service load. No further allowance for additional point loads or live loads.
4. Contact Siniat or a structural engineer to check ceiling for earthquake actions. Specific project information is required.
5. Table refers to Siniat steel studs of grade G300 steel with Zincalume™ AM150 or AM125 corrosion protection. Maximum production lengths available are 7.2m
6. Designed in accordance with *AS/NZS 4600:2018 Cold Formed Steel Structures.*
7. Wind pressures determined in accordance with *AS/NZS 1170.2 Wind Actions.*
8. Ultimate Load Case1: 1.2G + Wu (suction) + $Q_{0.03kPa\ Service\ Load}$
   Ultimate Load Case 2: 0.9G + Wu (uplift).
9. Serviceability Load Case 1: G with deflection limited to span/500
   Serviceability Load Case 2: G + Ws with deflection limited to span/360 or 12mm.
10. The nominated lateral pressures and deflection limits must be checked for suitability for a specific project.

Table 11 Single Span Internal Steel Stud Ceiling Span Table (mm) - REGION A

Refer to Blueprint Section 2.3 for assistance determining the relevant wind pressures for a specific project.

Steel stud ceiling lined on the above side only	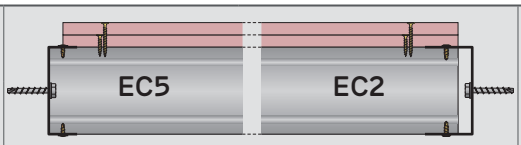	Up to BCA Building Importance Level 3	Ultimate pressure W_U (kPa)	0.54
			Serviceability pressure W_S (kPa)	0.35

Ceiling Stud Depth and BMT (mm)	Maximum Ceiling Stud Centres (mm)	System Number		
		SSC6	SSC7	SSC8
64 x 0.5	450	1910	1860	1800
	400	1990	1930	1870
	300	2190	2130	2060
64 x 0.75	450	2180	2120	2050
	400	2270	2210	2130
	300	2500	2430	2350
64 x 1.15	450	2510	2440	2360
	400	2610	2540	2450
	300	2880	2800	2700
76 x 0.55	450	2260	2190	2120
	400	2350	2280	2200
	300	2580	2510	2430
76 x 0.75	450	2530	2460	2380
	400	2630	2560	2470
	300	2900	2820	2720
76 x 1.15	450	2880	2800	2710
	400	3000	2920	2820
	300	3300	3210	3100
92 x 0.55	450	2630	2560	2420
	400	2740	2660	2570
	300	3010	2930	2830
92 x 0.75	450	2910	2830	2730
	400	3020	2940	2840
	300	3330	3240	3130
92 x 1.15	450	3350	3260	3150
	400	3480	3390	3270
	300	3830	3730	3600
150 x 0.75	450	4110	4030	3920
	400	4260	4170	4060
	300	4650	4550	4430
150 x 1.15	450	4780	4680	4560
	400	4930	4820	4700
	300	5290	5180	5050

*Greater span possible using **Sliding** type EC4 end connection. Contact Siniat if required.

Nogging Table

Ceiling Span (m)	Number of Noggings evenly spaced along ceiling joist
0 - 2.0	0
2.0 - 4.0	1
above 4.0	2

End Track Anchor Demand

1. Maximum anchor shear and tension demand = 1.33 kN
2. Anchors at maximum 1.5 x stud spacing up to 600mm maximum, and 100mm maximum from ends.
3. 150mm tracks require 2 anchors across width.

1. End Connection 1 is **Sliding** type EC2. End Connection 2 is **Fixed** type EC5. Refer to *Stud Ceiling End Connections* for end connection details including track BMT.
2. Table based upon downward (suction) and upward (uplift) pressures, for internal use only.
3. Table includes self weight and 2 kg/m² insulation weight with an additional 3 kg/m² service load. No further allowance for additional point loads or live loads.
4. Contact Siniat or a structural engineer to check ceiling for earthquake actions. Specific project information is required.
5. Table refers to Siniat steel studs of grade G300 steel with Zincalume™ AM150 or AM125 corrosion protection. Maximum production lengths available are 7.2m
6. Designed in accordance with *AS/NZS 4600:2018 Cold Formed Steel Structures.*
7. Wind pressures determined in accordance with *AS/NZS 1170.2 Wind Actions.*
8. Ultimate Load Case1: 1.2G + Wu (suction) + $Q_{0.03kPa\ Service\ Load}$
   Ultimate Load Case 2: 0.9G + Wu (uplift).
9. Serviceability Load Case 1: G with deflection limited to span/500
   Serviceability Load Case 2: G + Ws with deflection limited to span/360 or 12mm.
10. The nominated lateral pressures and deflection limits must be checked for suitability for a specific project.

Table 12 Single Span Internal Steel Stud Ceiling Span Table (mm) - REGION B

Refer to Blueprint Section 2.3 for assistance determining the relevant wind pressures for a specific project.

Steel stud ceiling lined on the above side only	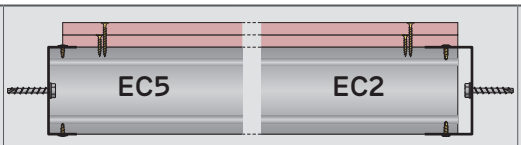	Up to BCA Building Importance Level 3	Ultimate pressure W_U (kPa)	0.83
			Serviceability pressure W_S (kPa)	0.35

Ceiling Stud Depth and BMT (mm)	Maximum Ceiling Stud Centres (mm)	System Number		
		SSC6	SSC7	SSC8
64 x 0.5	450	1790	1760	1670
	400	1860	1830	1790
	300	2030	2000	2060
64 x 0.75	450	2180	2120	2000
	400	2270	2210	2130
	300	2500	2430	2350
64 x 1.15	450	2510	2440	2360
	400	2610	2540	2450
	300	2880	2800	2700
76 x 0.55	450	2150	2040	1900
	400	2350	2280	2140
	300	2580	2510	2430
76 x 0.75	450	2530	2460	2380
	400	2630	2560	2470
	300	2900	2820	2720
76 x 1.15	450	2880	2800	2710
	400	3000	2920	2820
	300	3300	3210	3100
92 x 0.55	450	2150	2040	1900
	400	2420	2290	2140
	300	3010	2930	2830
92 x 0.75	450	2910	2830	2730
	400	3020	2940	2840
	300	3330	3240	3130
92 x 1.15	450	3350	3260	3150
	400	3480	3390	3270
	300	3830	3730	3600
150 x 0.75	450	3640	3450	3220
	400	3910	3850	3620
	300	4280	4210	4120
150 x 1.15	450	4520	4450	4380
	400	4650	4590	4510
	300	5010	4940	4860

*Greater span possible using **Sliding** type EC4 end connection. Contact Siniat if required.

Nogging Table

Ceiling Span (m)	Number of Noggings evenly spaced along ceiling joist
0 - 2.0	0
2.0 - 4.0	1
above 4.0	2

End Track Anchor Demand

1. Maximum anchor shear and tension demand = 1.33 kN
2. Anchors at maximum 1.5 x stud spacing up to 600mm maximum, and 100mm maximum from ends.
3. 150mm tracks require 2 anchors across width.

1. End Connection 1 is **Sliding** type EC2. End Connection 2 is **Fixed** type EC5. Refer to *Stud Ceiling End Connections* for end connection details including track BMT.
2. Table based upon downward (suction) and upward (uplift) pressures, for internal use only.
3. Table includes self weight and 2 kg/m^2 insulation weight with an additional 3 kg/m^2 service load. No further allowance for additional point loads or live loads.
4. Contact Siniat or a structural engineer to check ceiling for earthquake actions. Specific project information is required.
5. Table refers to Siniat steel studs of grade G300 steel with Zincalume™ AM150 or AM125 corrosion protection. Maximum production lengths available are 7.2m
6. Designed in accordance with *AS/NZS 4600:2018 Cold Formed Steel Structures*.
7. Wind pressures determined in accordance with *AS/NZS 1170.2 Wind Actions*.
8. Ultimate Load Case1: 1.2G + Wu (suction) + $Q_{0.03kPa\ Service\ Load}$
   Ultimate Load Case 2: 0.9G + Wu (uplift).
9. Serviceability Load Case 1: G with deflection limited to span/500
   Serviceability Load Case 2: G + Ws with deflection limited to span/360 or 12mm.
10. The nominated lateral pressures and deflection limits must be checked for suitability for a specific project.

Plasterboard Layout

	Non-Fire Rated	Fire Rated
Sheet ceilings perpendicular to framing members.	✓	✓
Stagger face layer butt joints by 600mm minimum on adjoining sheets and between layers.	✓	✓
Stagger recessed edges by 300mm minimum between layers.	✓	✓
Follow the back-blocking requirements and butt joint placement for the level of finish selected. [Refer To Section 7]	✓	

- Sheet ceilings parallel to the light source to reduce the effect of glancing light.
- Minimise butt joints by using the longest sheet possible.
- Butt joints on underlying layers (not face layer) may be made on the same framing member.
- For 2 layer systems at 450mm centres, face layer butt joints may be fixed to framing members.

Plasterboard Fixing

	Non-Fire Rated	Fire Rated
For the installation of plasterboard to studs joists, refer to Section 5.1.	✓	✓
Drive screws to just below the sheet surface, taking care not to break the paper linerboard. For over-driven screws, install another screw 20mm away. Leave or remove the over-driven screw and patch.	✓	✓
Use laminating screws to fix floating butt joints in the second and third layer.	✓	✓
Screw and Adhesive Method		
Apply mastagrip Stud Adhesive after the frame is clean, dry, and free from grease, dust and other contaminants.	✓	
Apply mastagrip daubs 200mm minimum from screws and plasterboard edges.	✓	
Screw Only Method		
Use the 'Screw Only Method' for fire rated ceilings. Stud adhesive is not permitted.	✓	✓

The 'Screw and Adhesive Method' is recommended for non-fire rated applications. mastagrip will:

- Minimise screw popping
- Reduce the number of screw heads that may show in glancing light
- Assist in compensating for frame irregularities.

Screw Type and Minimum Size for the Installation of Plasterboard to Steel

Plasterboard Thickness	1st Layer	2nd Layer	3rd Layer	4th Layer
6.5mm	6g x 25mm screw	6g x 25mm screw	-	-
10mm	6g x 25mm screw	6g x 41mm screw *	-	-
13mm	6g x 25mm screw	6g x 41mm screw *	7g x 57mm screw *	-
16mm	6g x 32mm screw	6g x 45mm screw *	8g x 65mm screw *	8g x 75mm screw *

For steel ≤ 0.75mm BMT, use fine thread needle point screws.

For steel ≥ 0.75mm BMT, use fine thread drill point screws.

*10g x 38mm Laminating screws may be used as detailed in installation diagrams.

Fire Rated and Non-Fire Rated
Stud Dropper Connections to Concrete

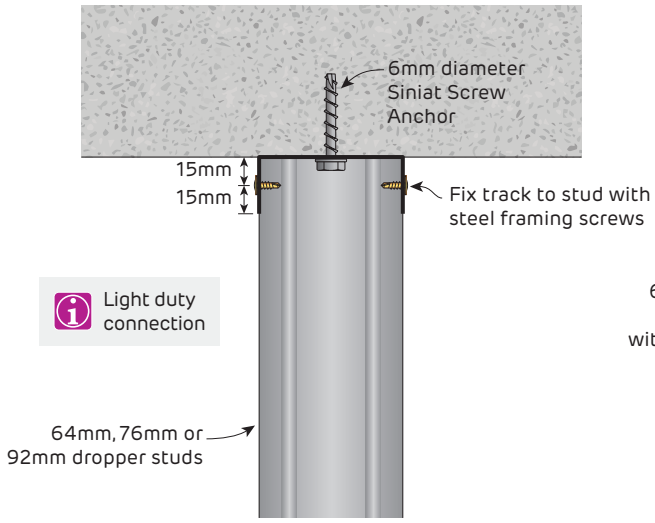

FIGURE 5 Concrete Soffit Connection SC1
Light duty connection
Section

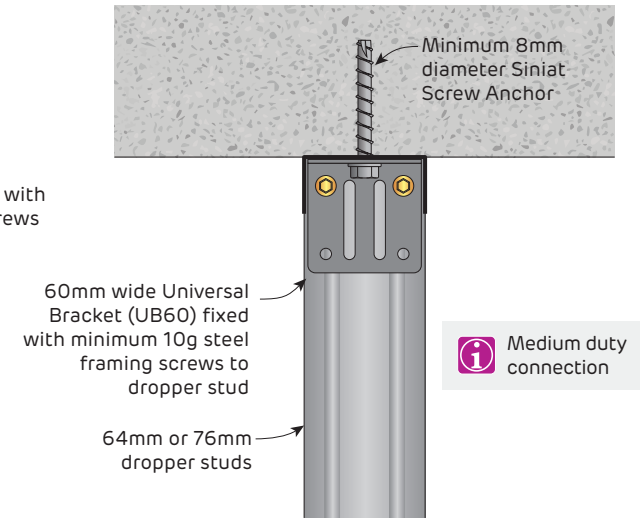

FIGURE 6 Concrete Soffit Connection SC2
64mm or 76mm studs only - Medium duty
Section

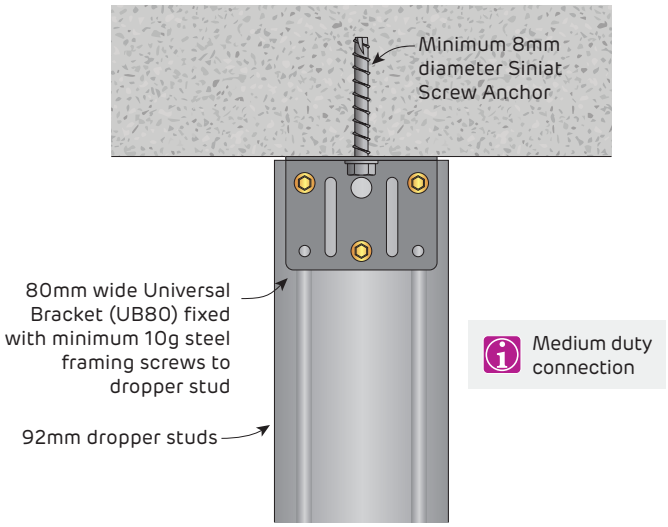

FIGURE 7 Concrete Soffit Connection SC2
92mm studs only - Medium duty
Section

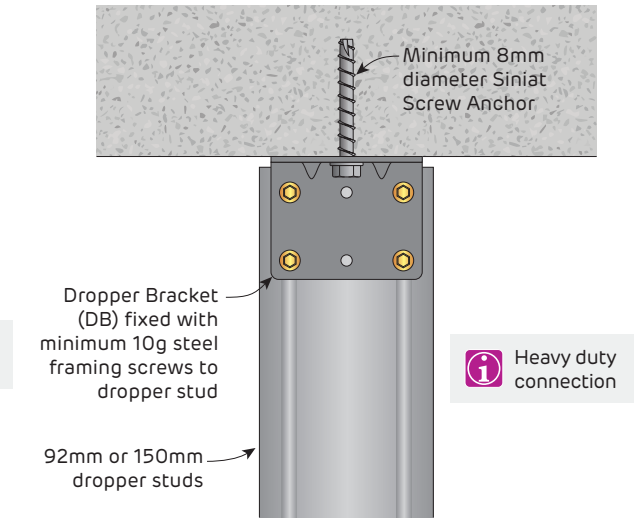

FIGURE 8 Concrete Soffit Connection SC3
92mm only - Heavy duty
Section

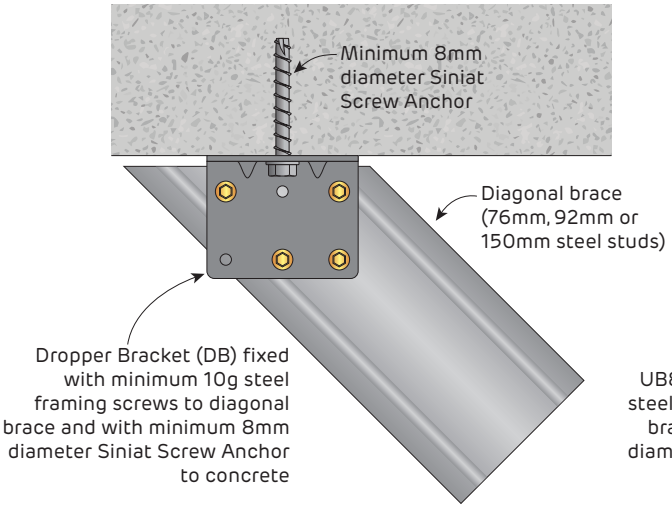

FIGURE 9 Diagonal Brace to Concrete
92mm studs only - Heavy duty
Section

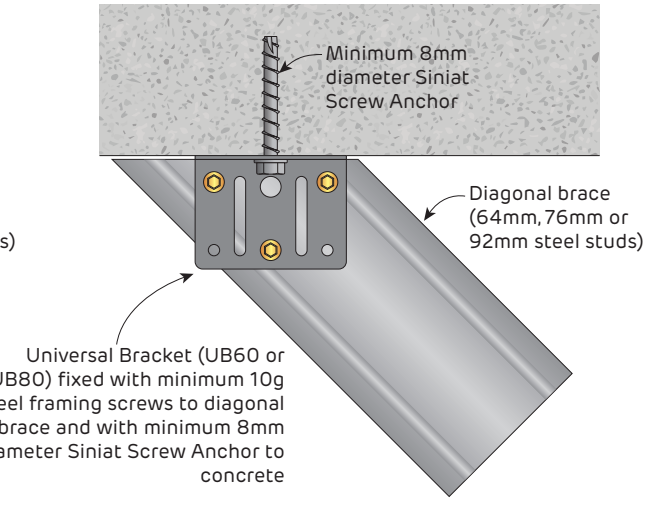

FIGURE 10 Diagonal Brace to Concrete
64mm, 76mm or 92mm studs only - Medium duty
Section

Fire Rated and Non-Fire Rated
Stud Dropper Connections to Purlins

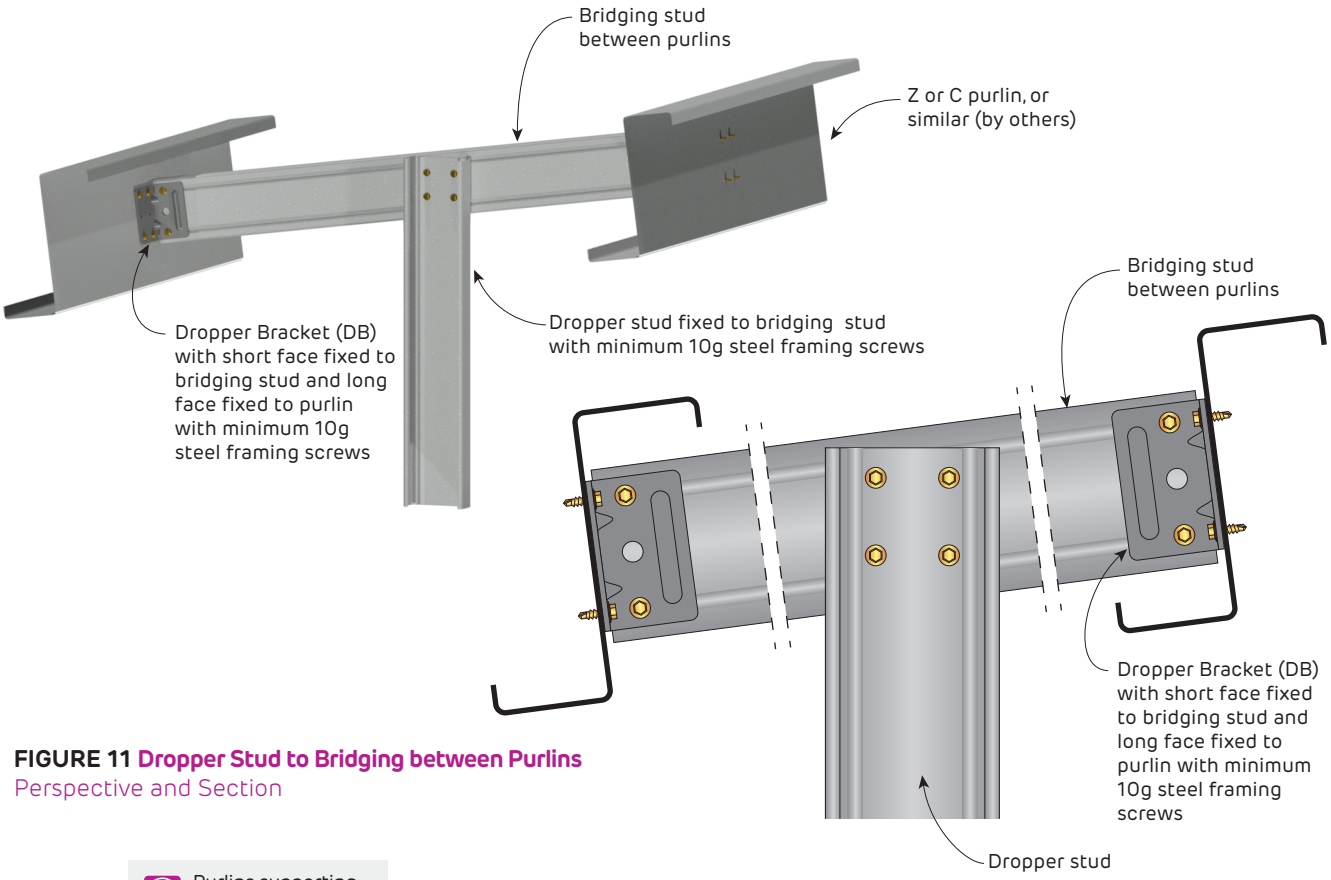

FIGURE 11 Dropper Stud to Bridging between Purlins
Perspective and Section

Purlins supporting drywall construction must be designed for the additional intended loads

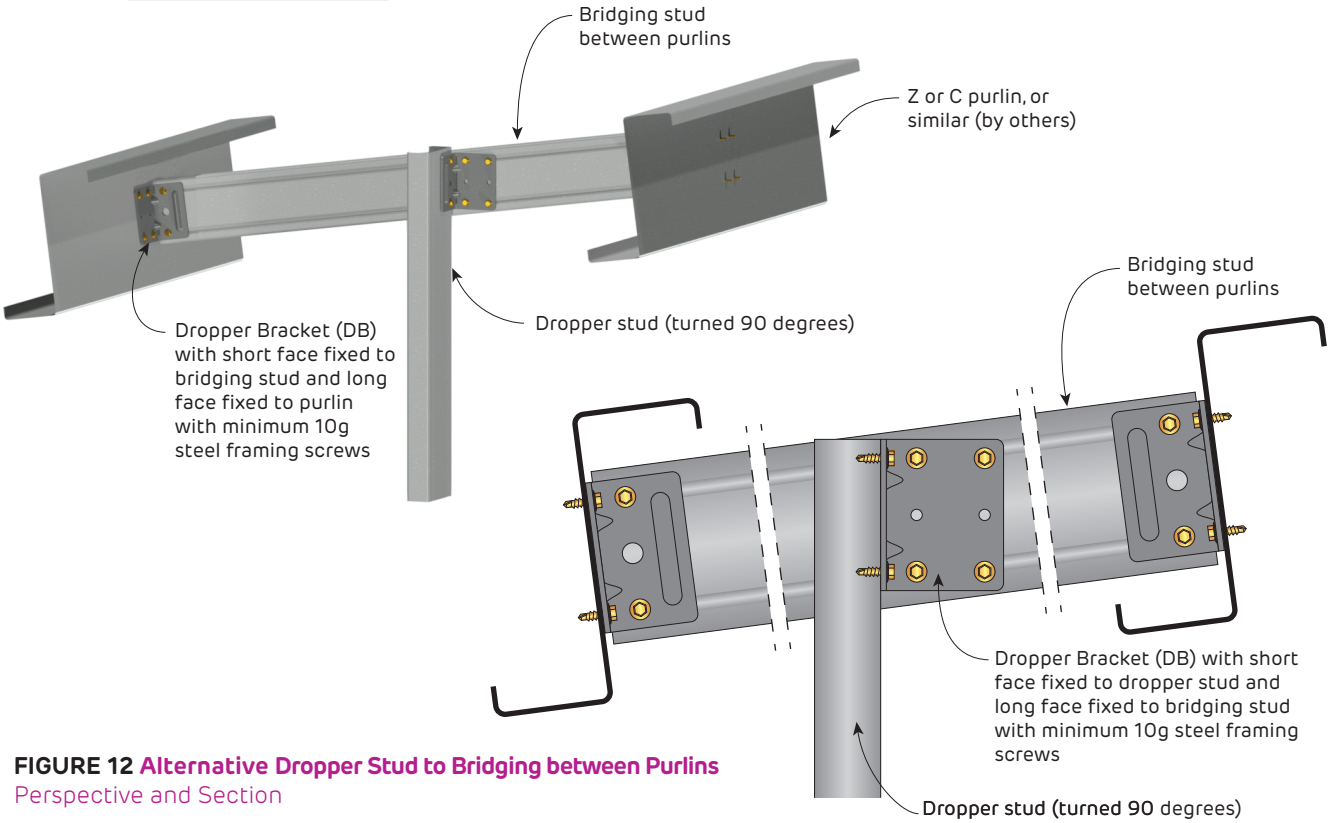

FIGURE 12 Alternative Dropper Stud to Bridging between Purlins
Perspective and Section

Fire Rated and Non-Fire Rated
Stud Dropper Connections to Purlins

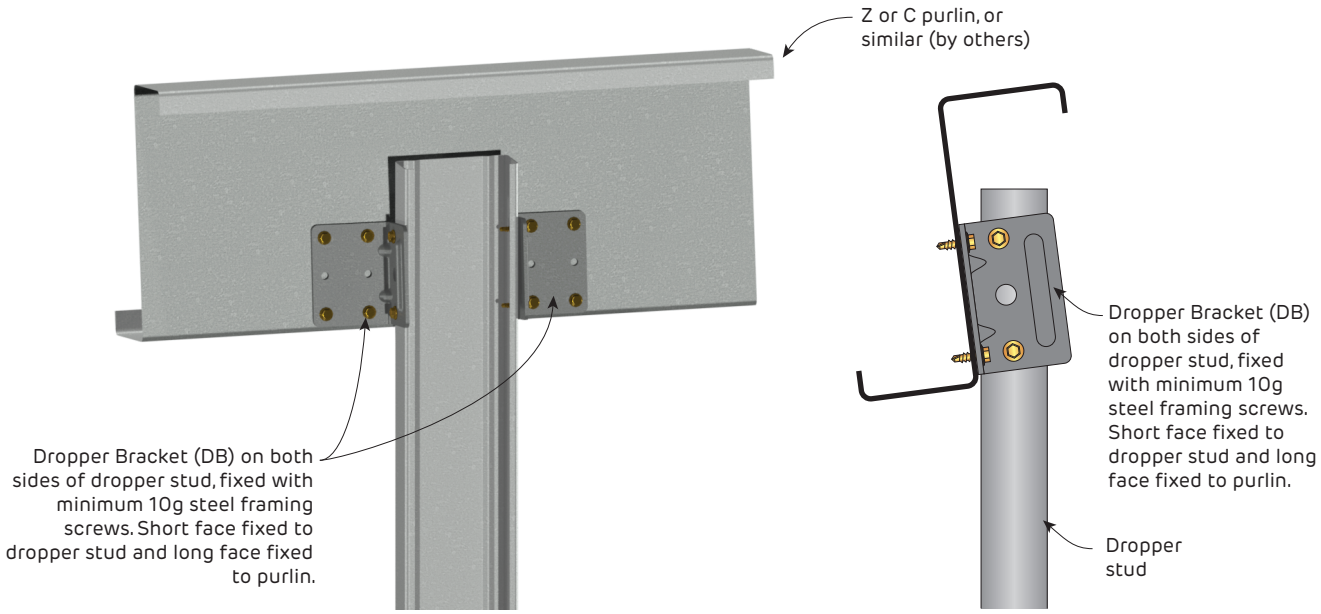

FIGURE 13 Dropper Stud to Purlin
Perspective and Section

Fire Rated and Non-Fire Rated
Diagonal Bracing Connections to Purlins

Purlins supporting drywall construction must be designed for the additional intended loads

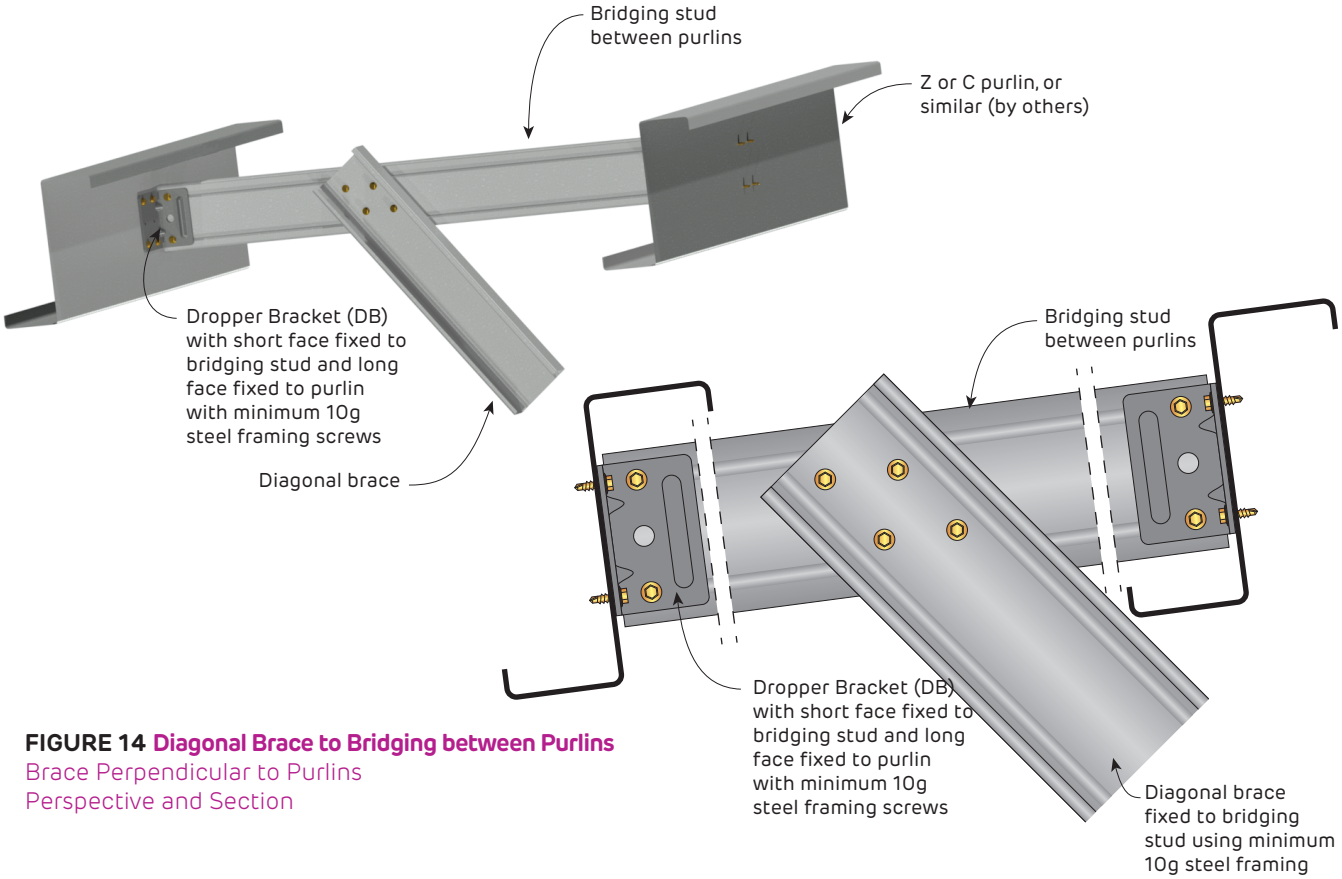

FIGURE 14 Diagonal Brace to Bridging between Purlins
Brace Perpendicular to Purlins
Perspective and Section

Fire Rated and Non-Fire Rated
Diagonal Bracing Connections to Purlins

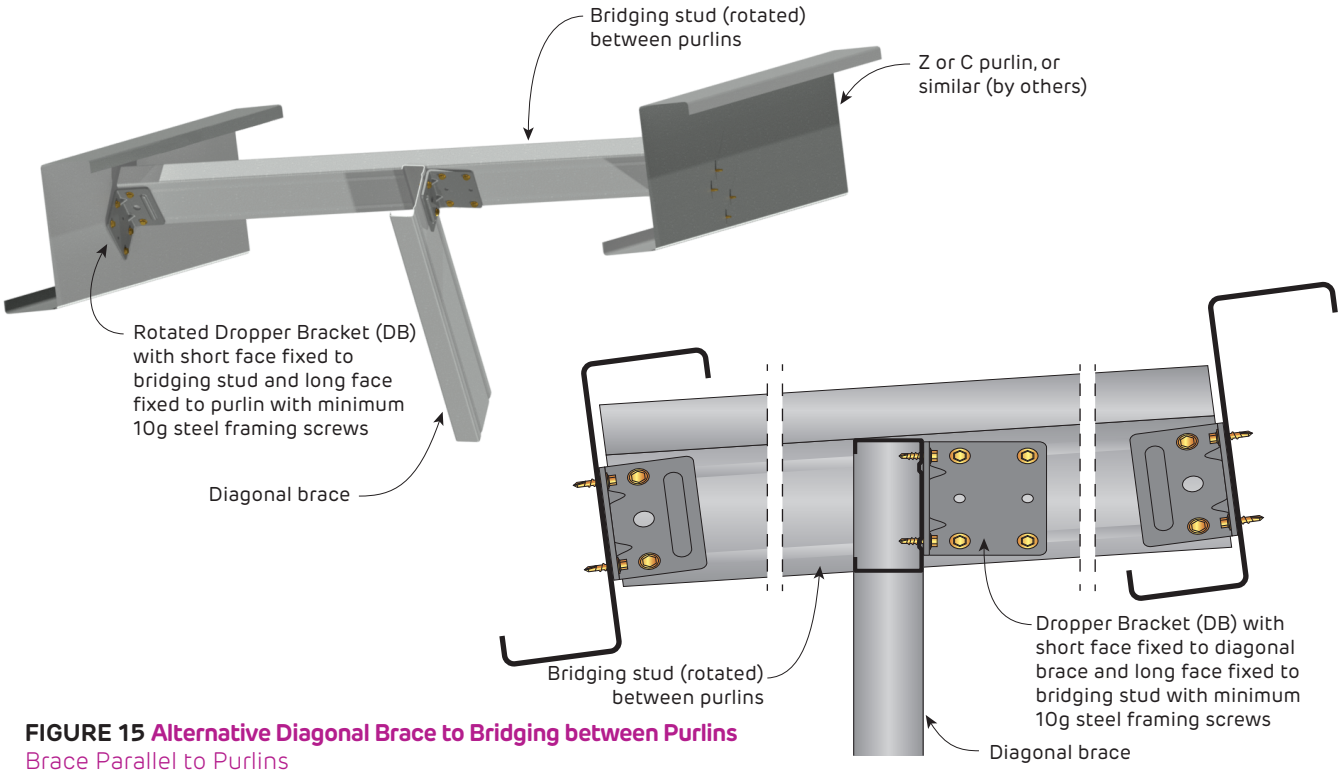

FIGURE 15 Alternative Diagonal Brace to Bridging between Purlins
Brace Parallel to Purlins
Perspective and Section

Purlins supporting drywall construction must be designed for the additional intended loads

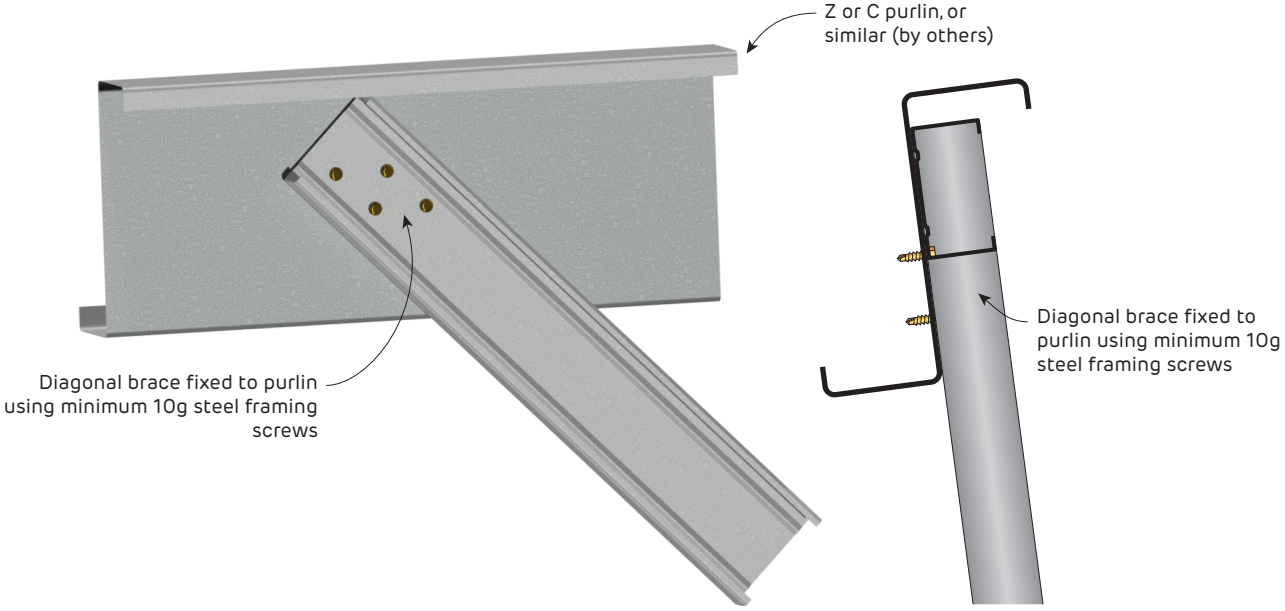

FIGURE 16 Diagonal Brace to Purlin
Brace Parallel to Purlins
Perspective and Section

Non-Fire Rated
Steel Stud Ceilings

Refer to seismic construction details for earthquake resistant ceilings

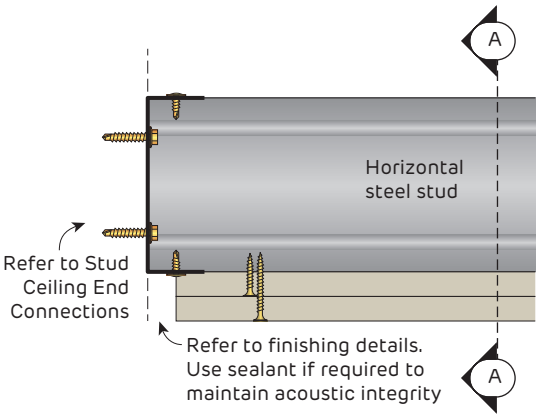

FIGURE 17 Fixed Connection EC5
Fixed Track
Section

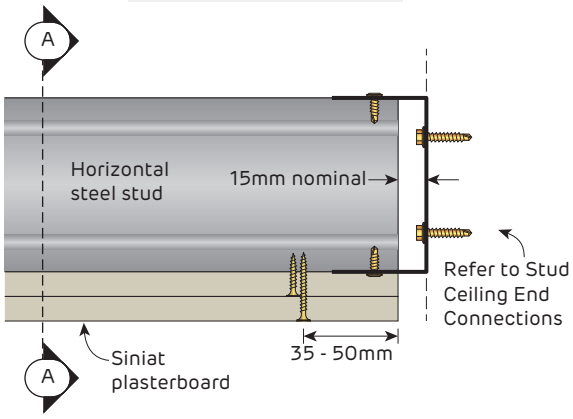

FIGURE 18 Sliding Connection EC2
Slotted Deflection Head Track
Section

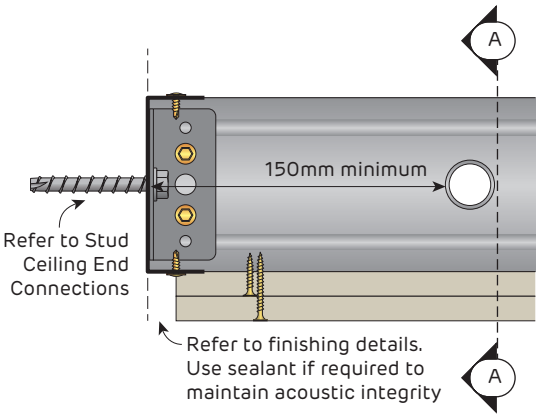

FIGURE 19 Fixed Connection EC6
Universal Bracket
Section

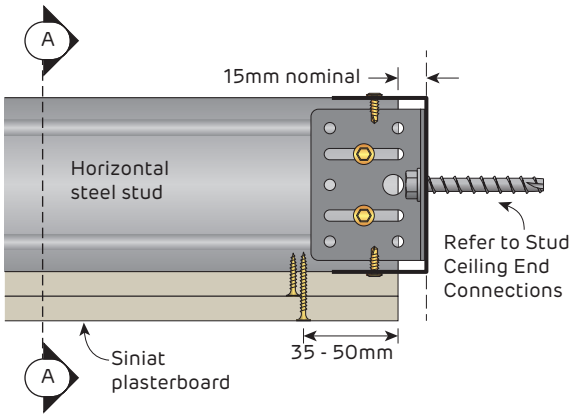

FIGURE 20 Sliding Connection EC4
Universal Bracket
Section

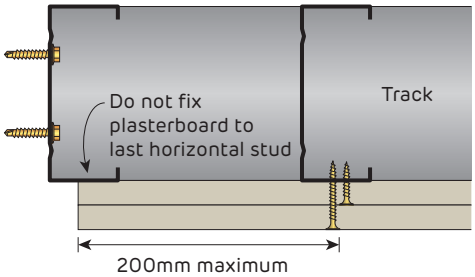

SECTION A-A Ceiling End
Section

Fire Rated
Steel Stud Ceilings

Refer to seismic construction details for earthquake resistant ceilings

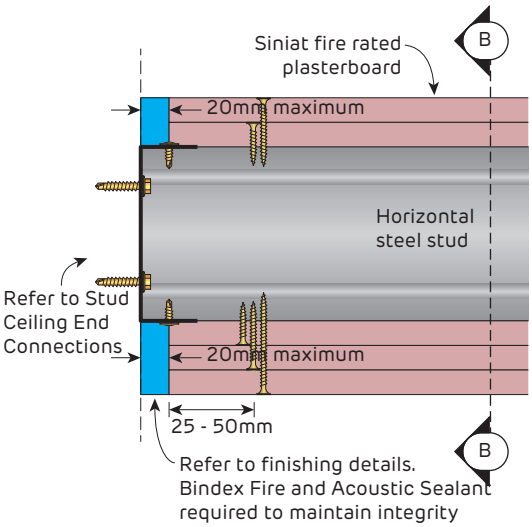

FIGURE 21 Fixed Connection EC5
Fixed Track
Section

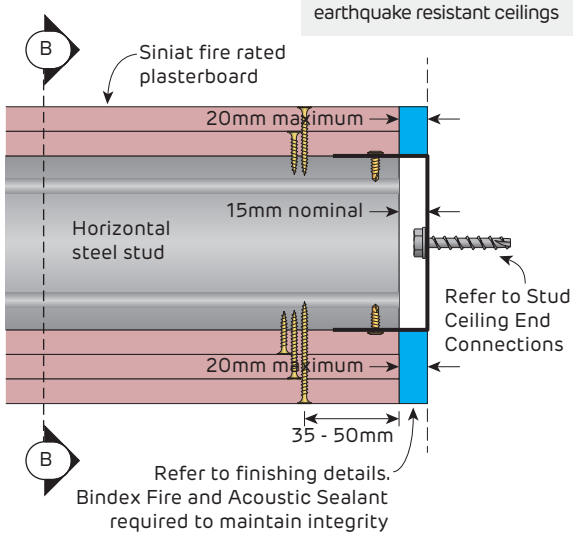

FIGURE 22 Sliding Connection EC2
Slotted Deflection Head Track
Section

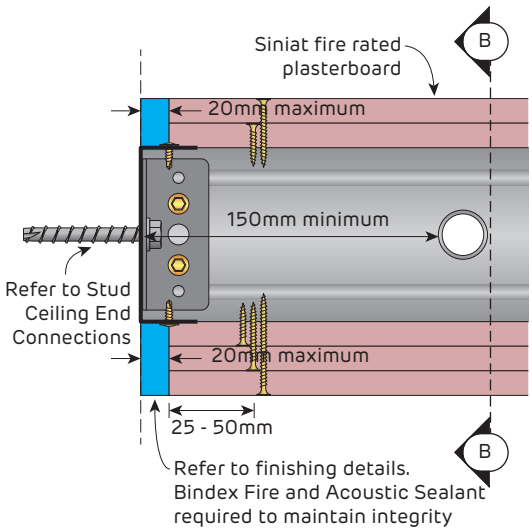

FIGURE 23 Fixed Connection EC6
Universal Bracket
Section

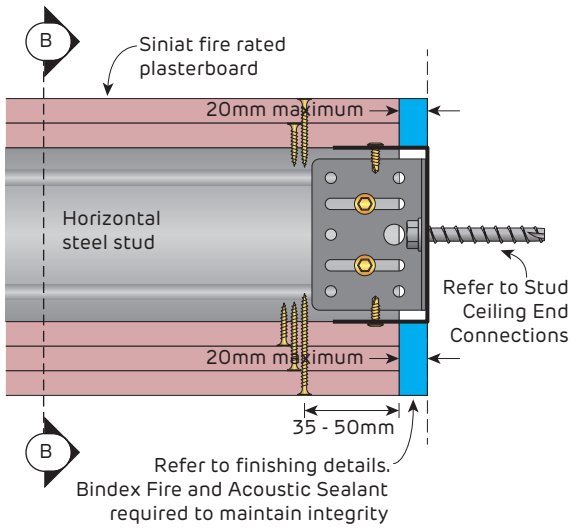

FIGURE 24 Sliding Connection EC4
Universal Bracket
Section

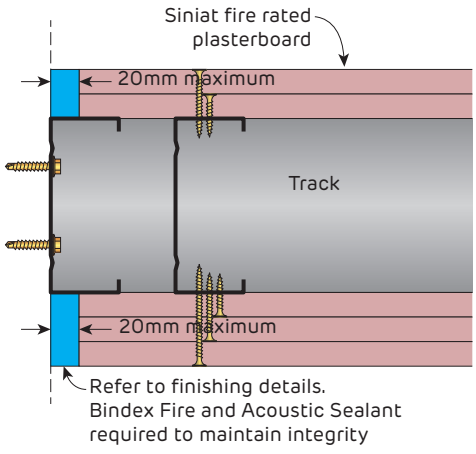

SECTION B-B End Connection
Section

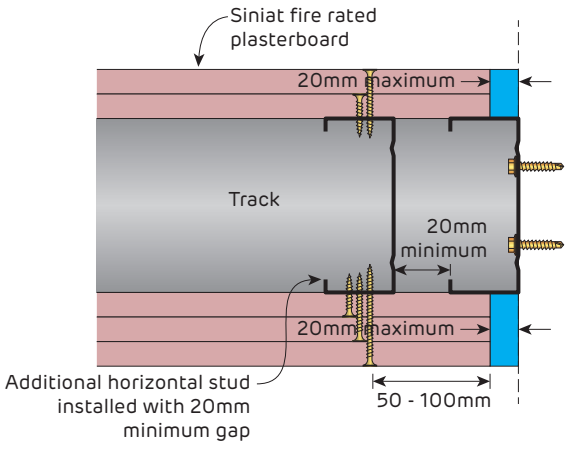

SECTION B-B End Connection
Section

Fire Rated

Steel Stud Ceilings

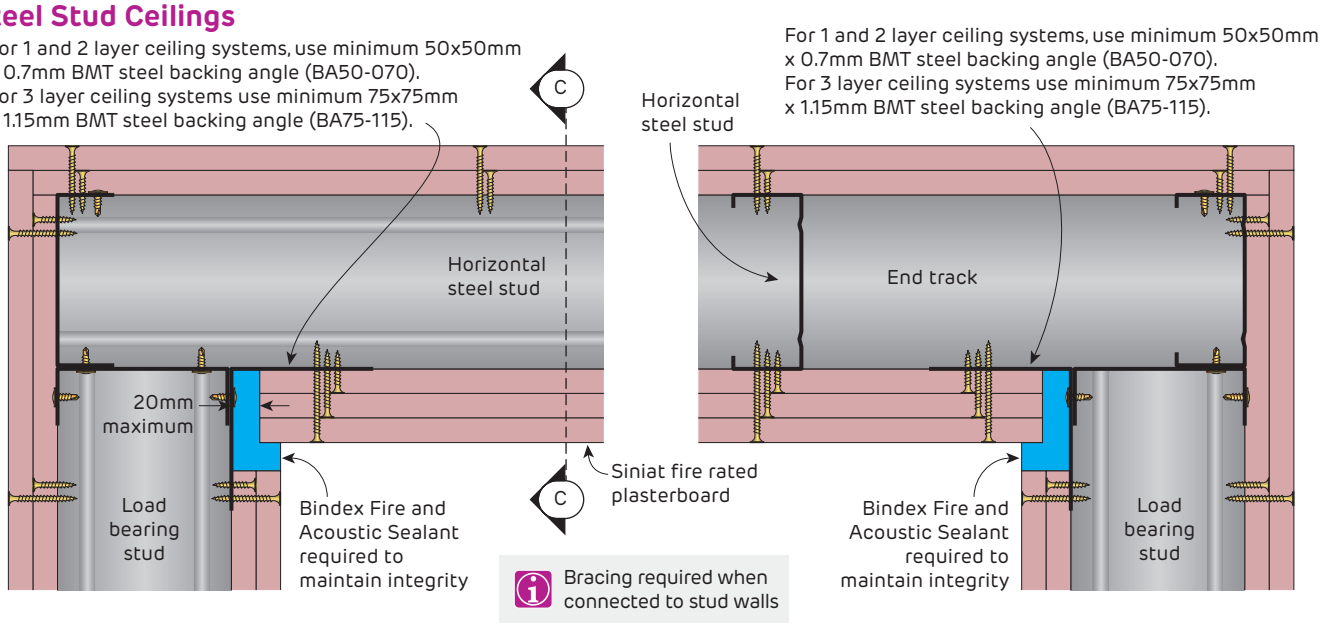

FIGURE 25 Ceiling End
Horizontal Steel Stud fixed to load bearing stud wall
Section

SECTION C-C Ceiling End
Horizontal Steel Stud fixed to load bearing stud wall
Section

Fire Rated
Steel Stud Ceilings - Built From the Underside

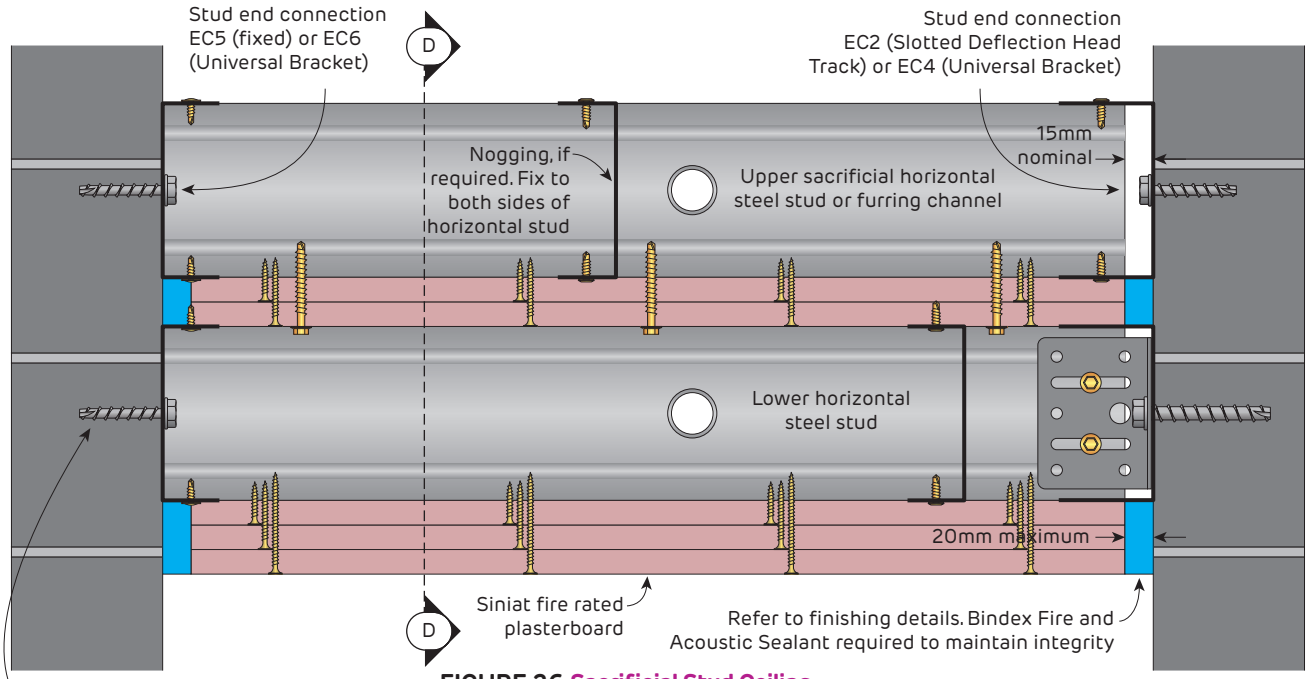

FIGURE 26 Sacrificial Stud Ceiling
Fire rated from above and below (Built from underside)
Section

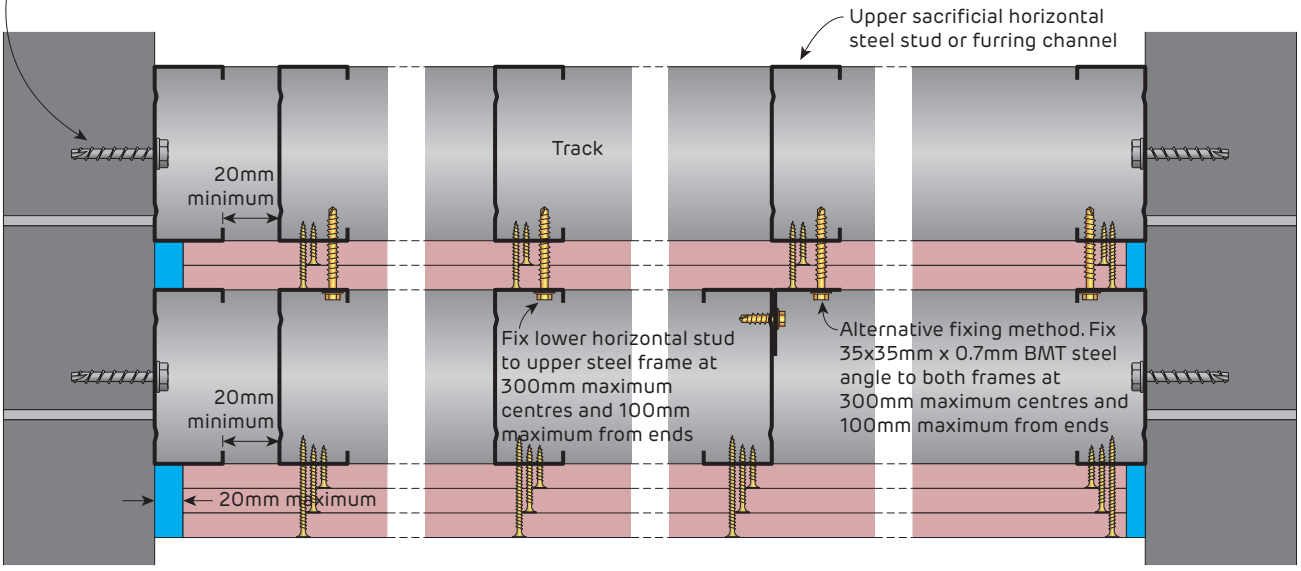

SECTION D-D Sliding Ceiling End
Section

SECTION D-D
Section

SECTION D-D Fixed Ceiling End
Section

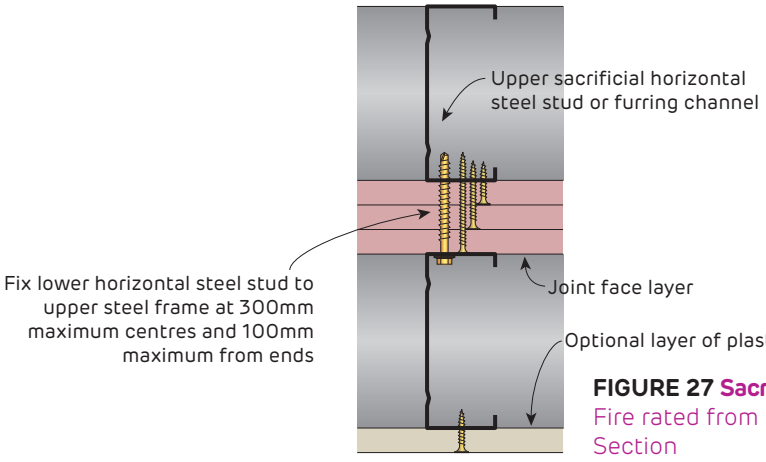

FIGURE 27 Sacrificial Stud Ceiling
Fire rated from above (Built from underside)
Section

Fire Rated

Steel Stud Ceilings - Built From the Underside

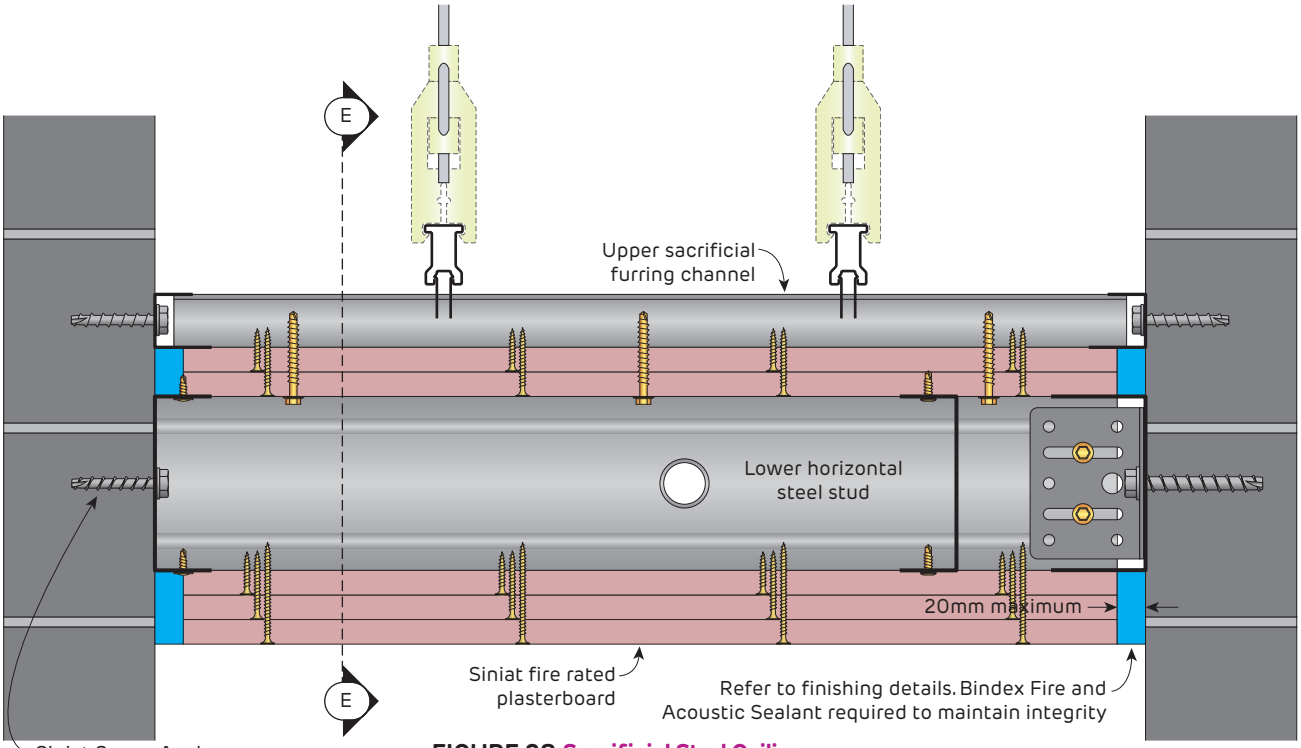

FIGURE 28 Sacrificial Stud Ceiling
Fire rated from above and below (Built from underside)
Section

Lower frame must be self supporting

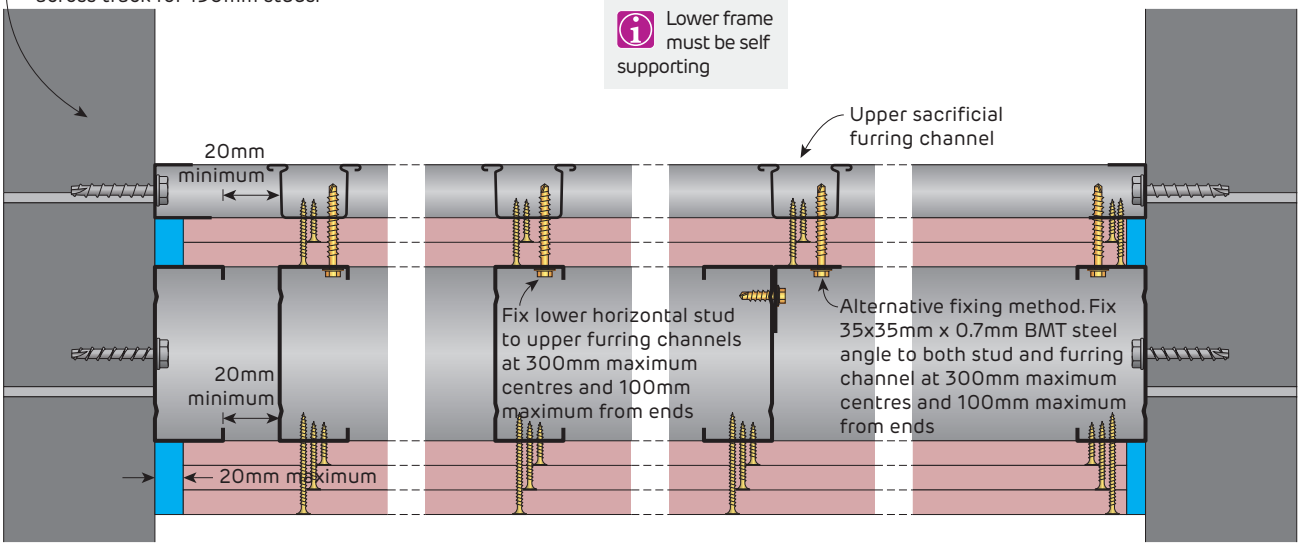

SECTION E-E Sliding Ceiling End
Section

SECTION E-E
Section

SECTION E-E Fixed Ceiling End
Section

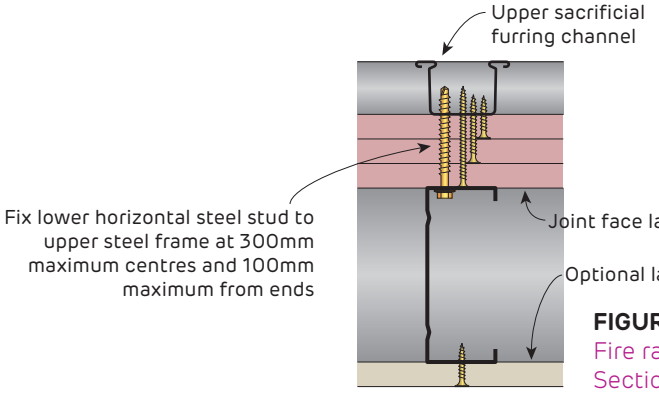

FIGURE 29 Sacrificial Stud Ceiling
Fire rated from above (Built from underside)
Section

Non-Fire Rated
Steel Stud Bulkhead

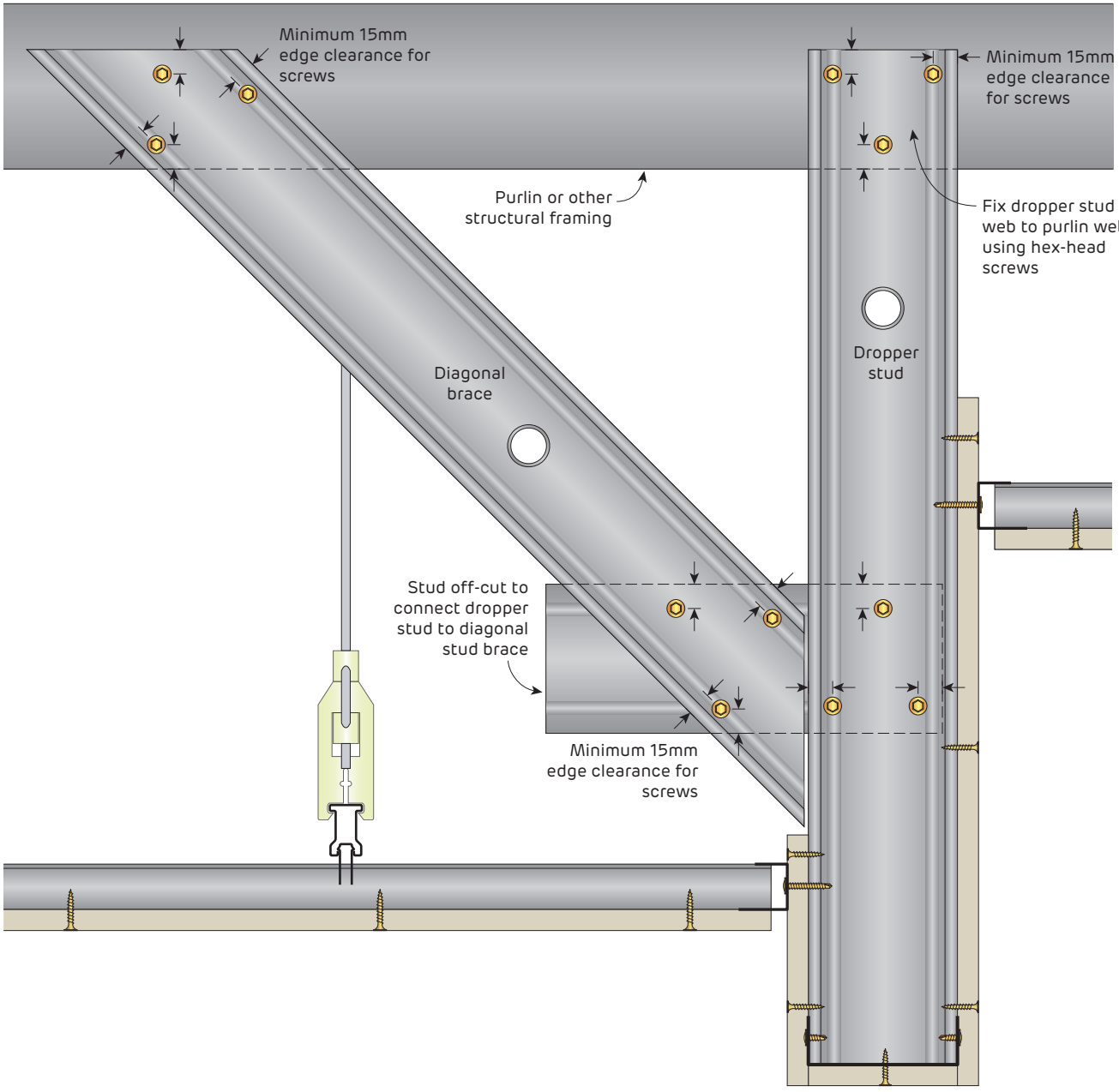

FIGURE 30 Stud Bulkhead
Section

Non-Fire Rated
Steel Stud Bulkheads

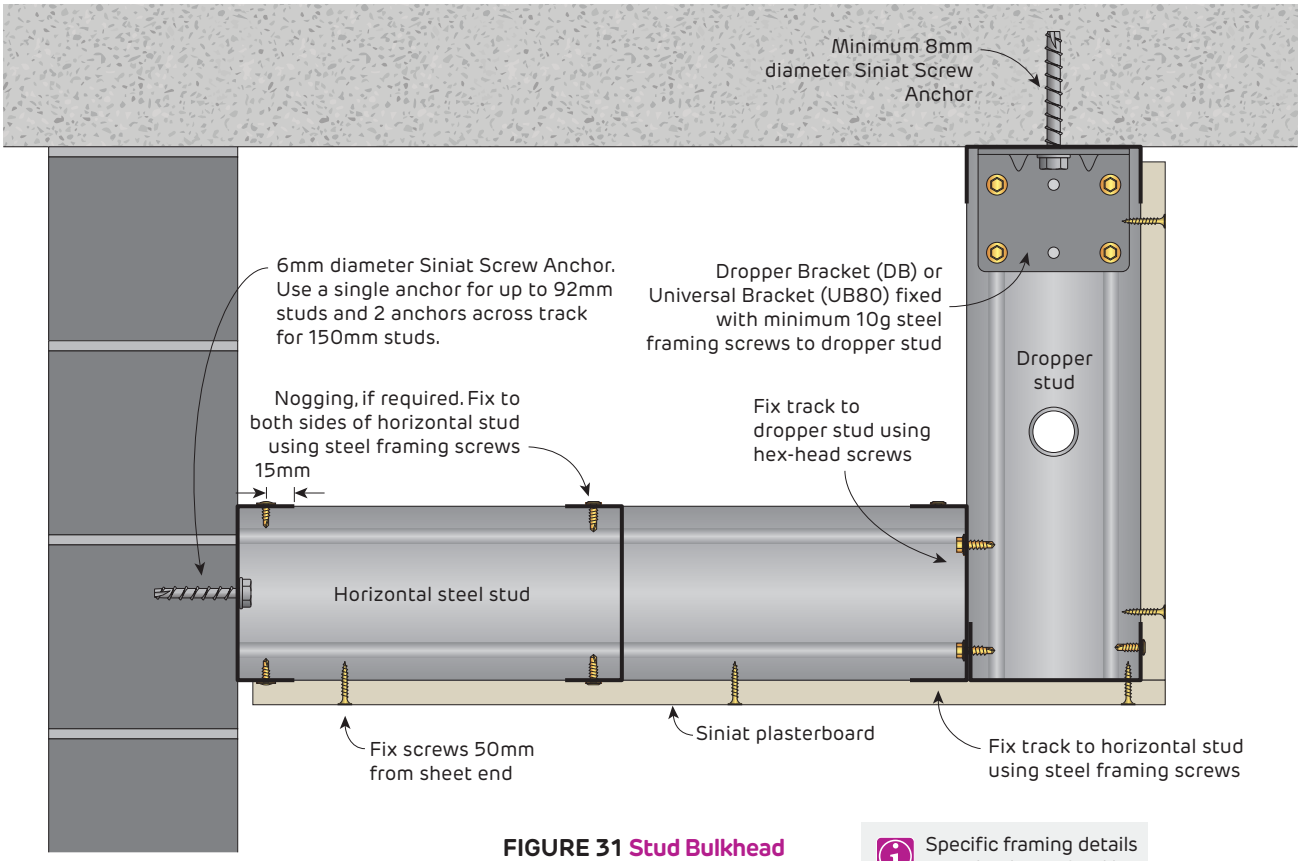

FIGURE 31 Stud Bulkhead
Section

Specific framing details must be determined by structural design

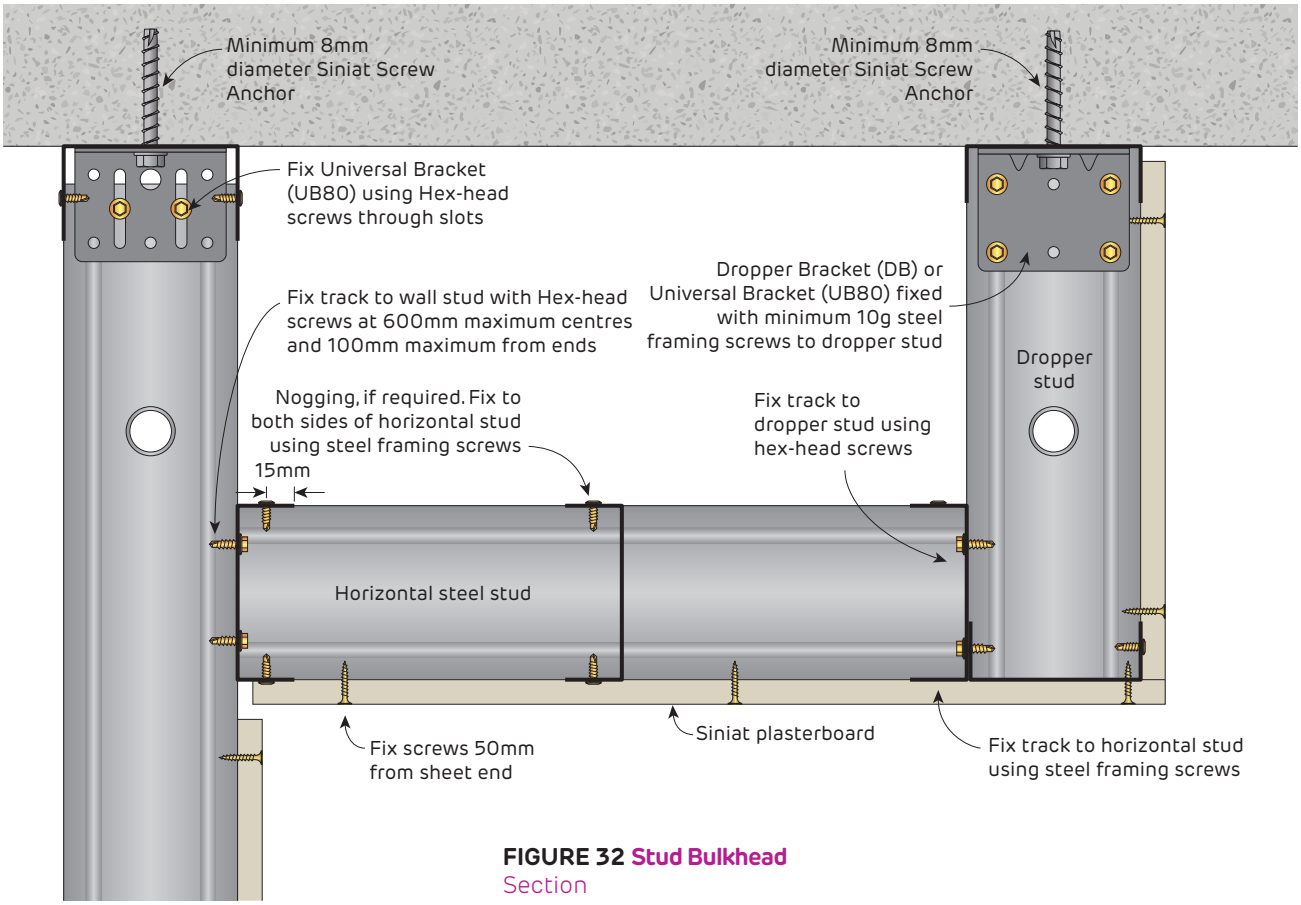

FIGURE 32 Stud Bulkhead
Section

Fire Rated
Steel Stud Bulkhead

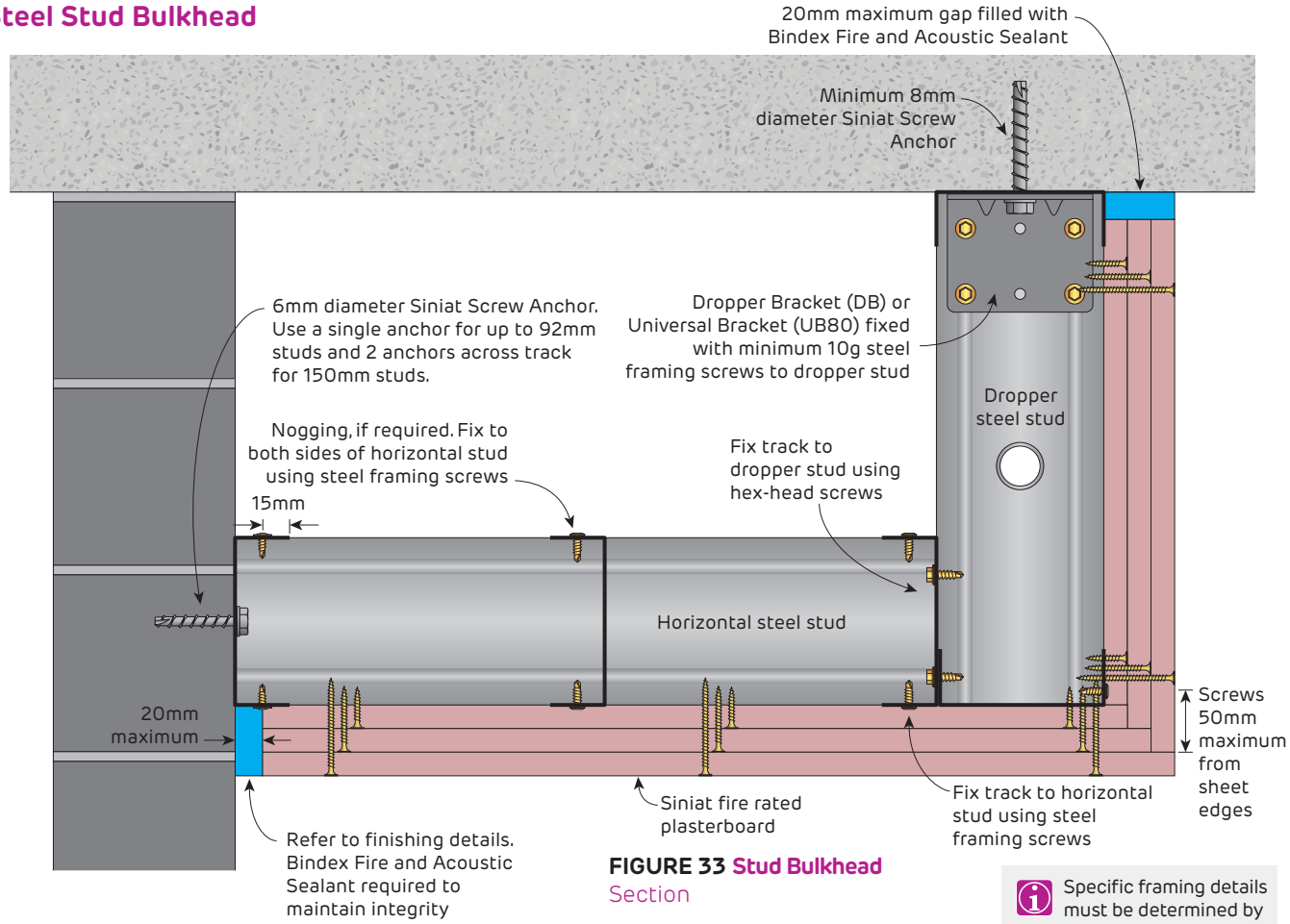

FIGURE 33 Stud Bulkhead
Section

Specific framing details must be determined by structural design

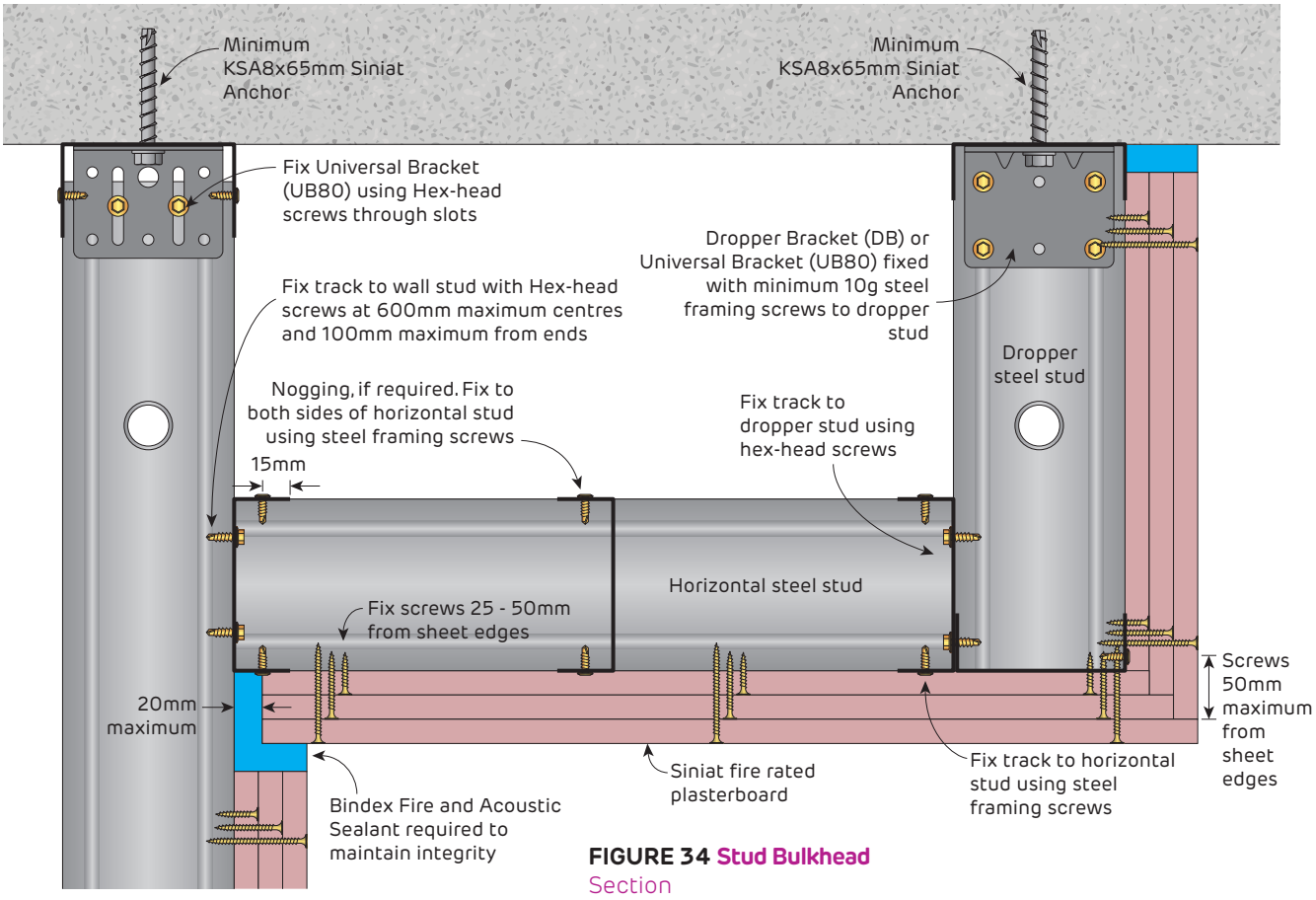

FIGURE 34 Stud Bulkhead
Section

Fire Rated and Non-Fire Rated
Steel Stud Bulkhead

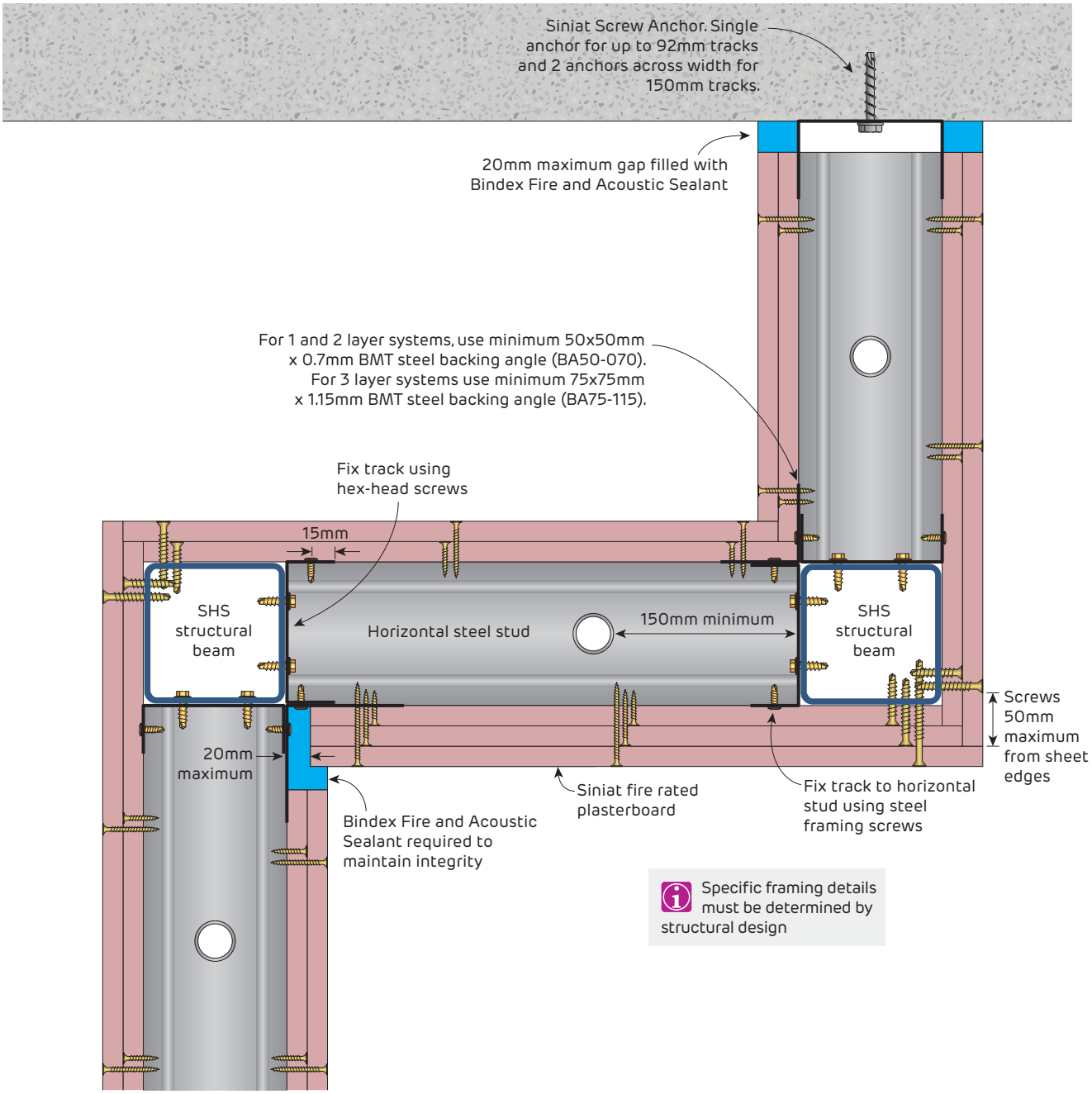

FIGURE 35 Stud Wall with Integrated Bulkhead
Section

Suggested Sizing of Structural Members in Steel Stud Plasterboard Walls and Ceilings

Stud Size (mm)	Structural Members
	SHS
76	75x75 SHS
92	90x90 SHS
150	150x150 SHS

Fire Rated

Steel Stud Bulkheads - Fire Rated from Both Directions

Using Wall Systems SSW312 or SSW317 with Ceiling Systems SSC2 or SSC3

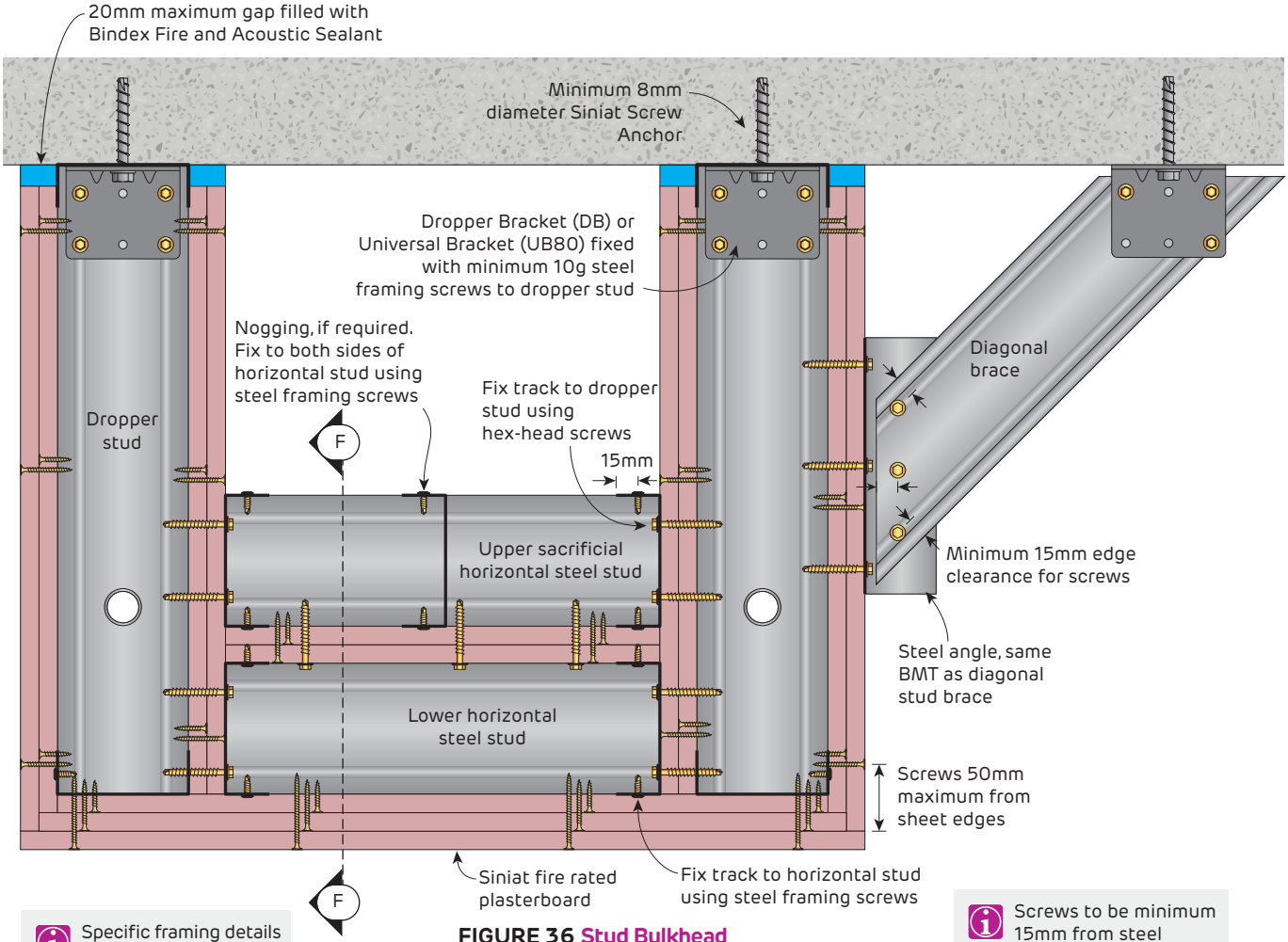

Specific framing details must be determined by structural design

FIGURE 36 Stud Bulkhead
Fire rated from both directions
Section

Screws to be minimum 15mm from steel profile ends and edges

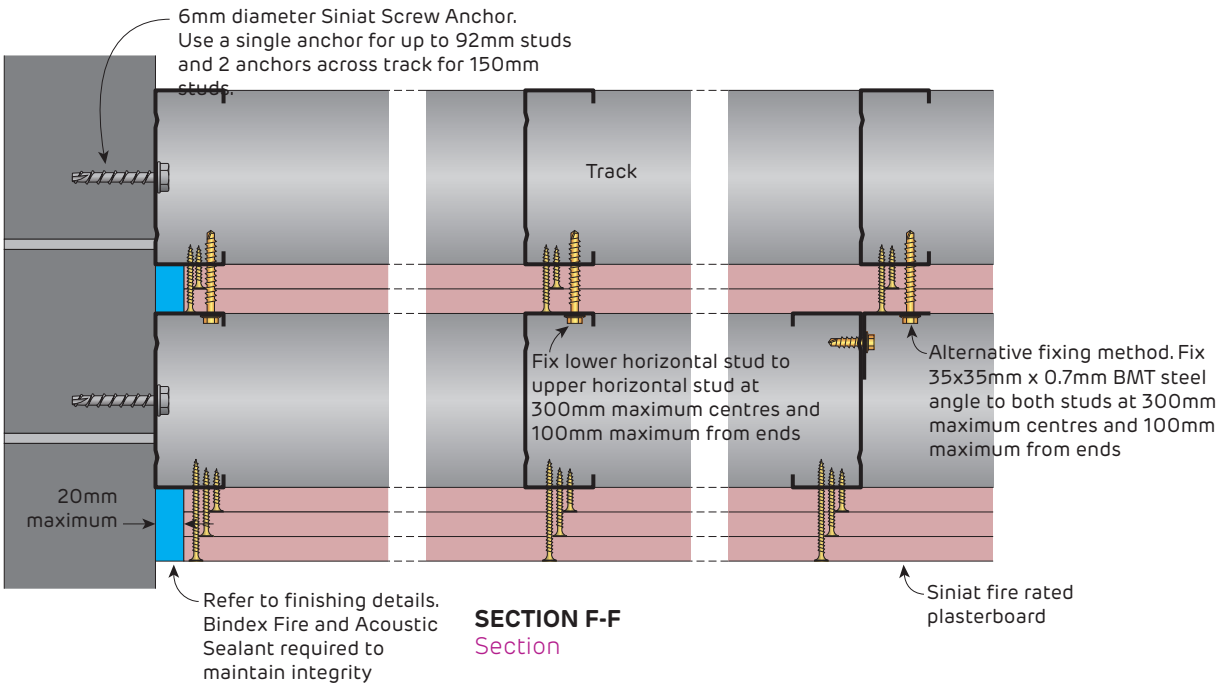

SECTION F-F
Section

Fire Rated

Steel Stud Bulkheads - Fire Rated from Both Directions

Using Wall Systems SSW312 or SSW317 with Ceiling Systems SSC2 or SSC3

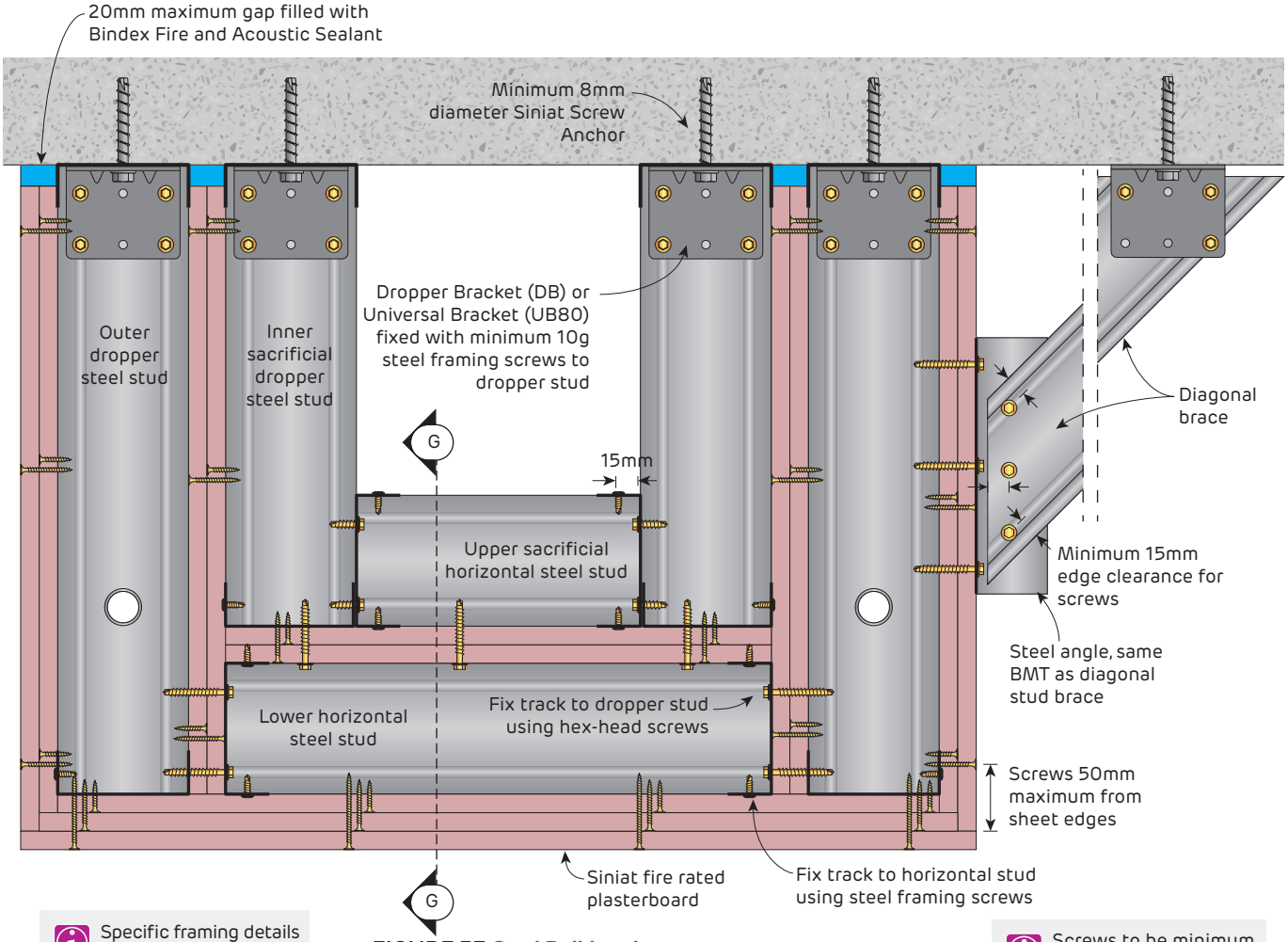

Specific framing details must be determined by structural design

FIGURE 37 Stud Bulkhead

Fire rated from both directions (Built from outside only)

Section

Screws to be minimum 15mm from steel profile ends and edges

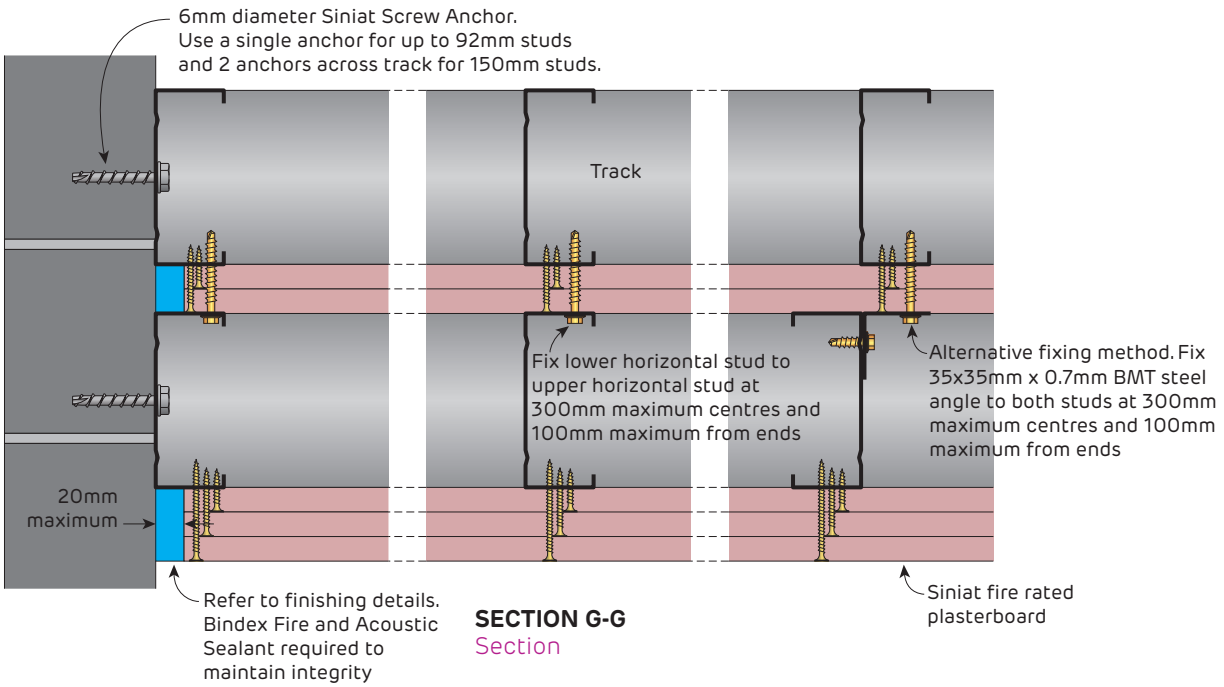

SECTION G-G

Section

Fire Rated

Steel Stud Bulkheads - Fire Rated from Both Directions

Using Wall Systems SSW312 or SSW317 with Ceiling Systems SHC3 or SHC4

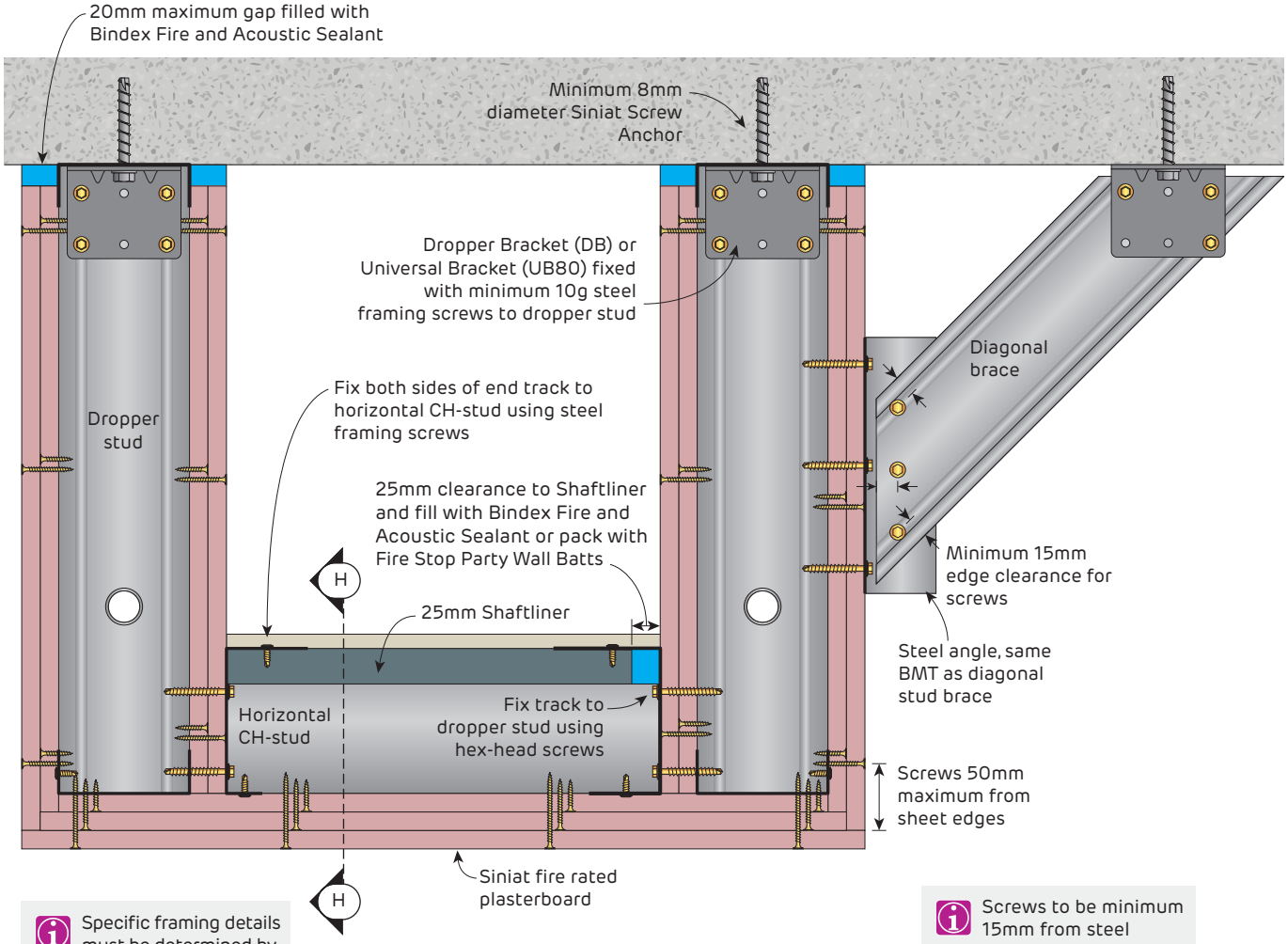

FIGURE 38 Stud Bulkhead Using Shaft Wall Ceiling

Fire rated from both directions (Built from outside only)

Section

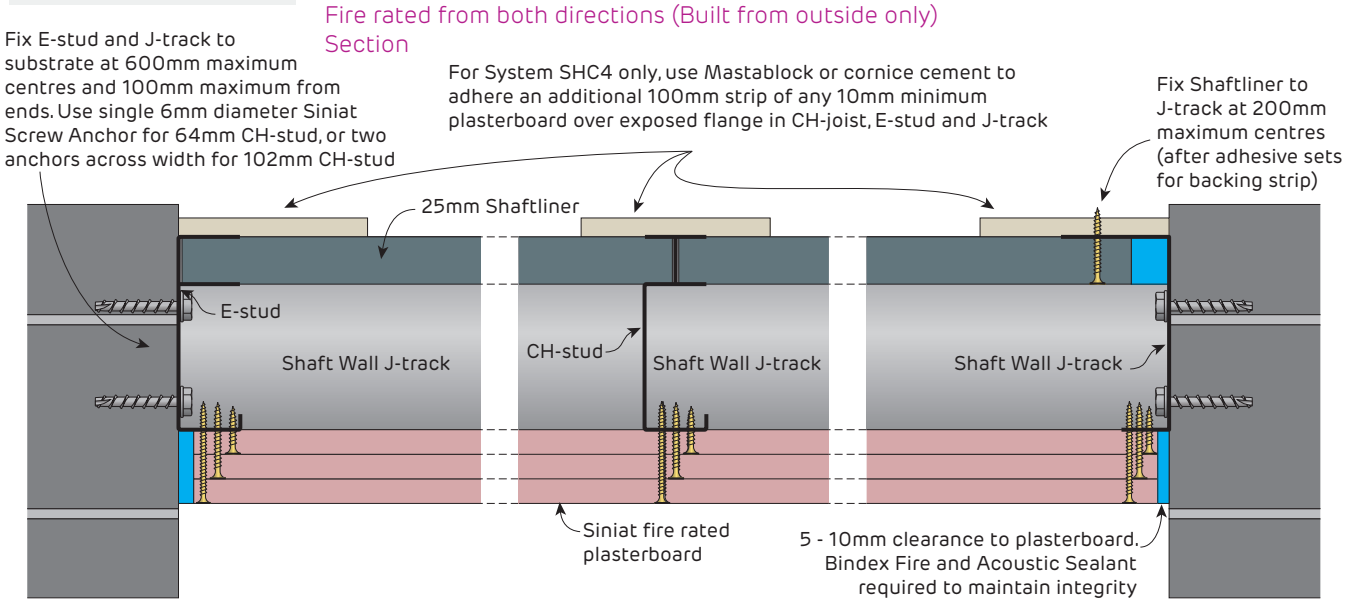

SECTION H-H

Section

Fire Rated
Steel Stud Raked Ceiling

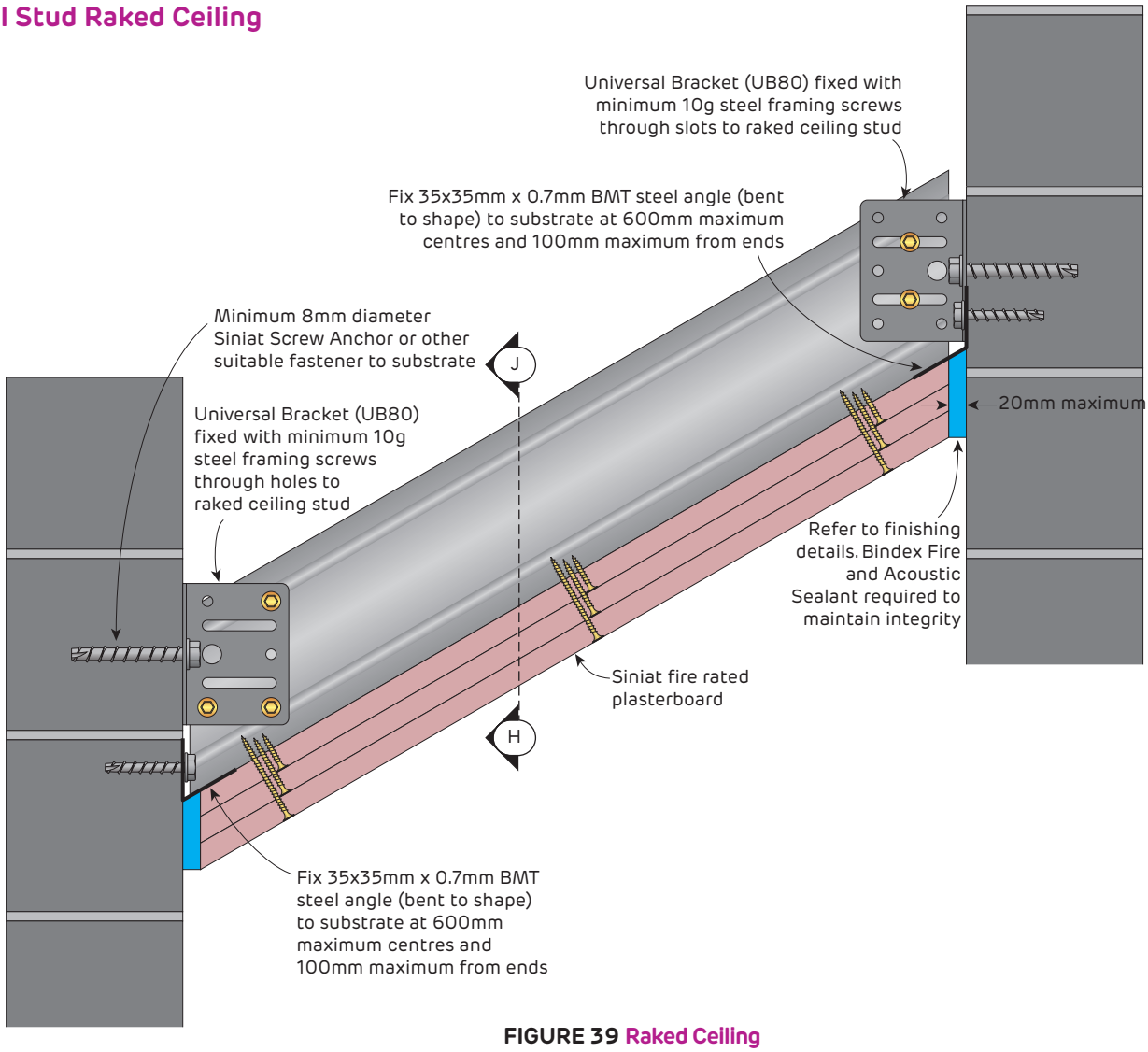

FIGURE 39 Raked Ceiling
Fire rated from below side only
Section

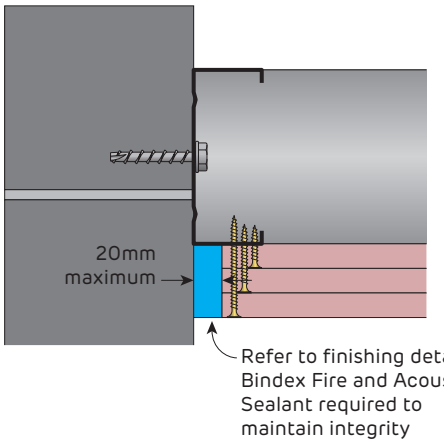

SECTION J-J
Section

Non-Fire Rated
Seismic Details for Stud Ceiling - Type A1 Fixed / Sliding

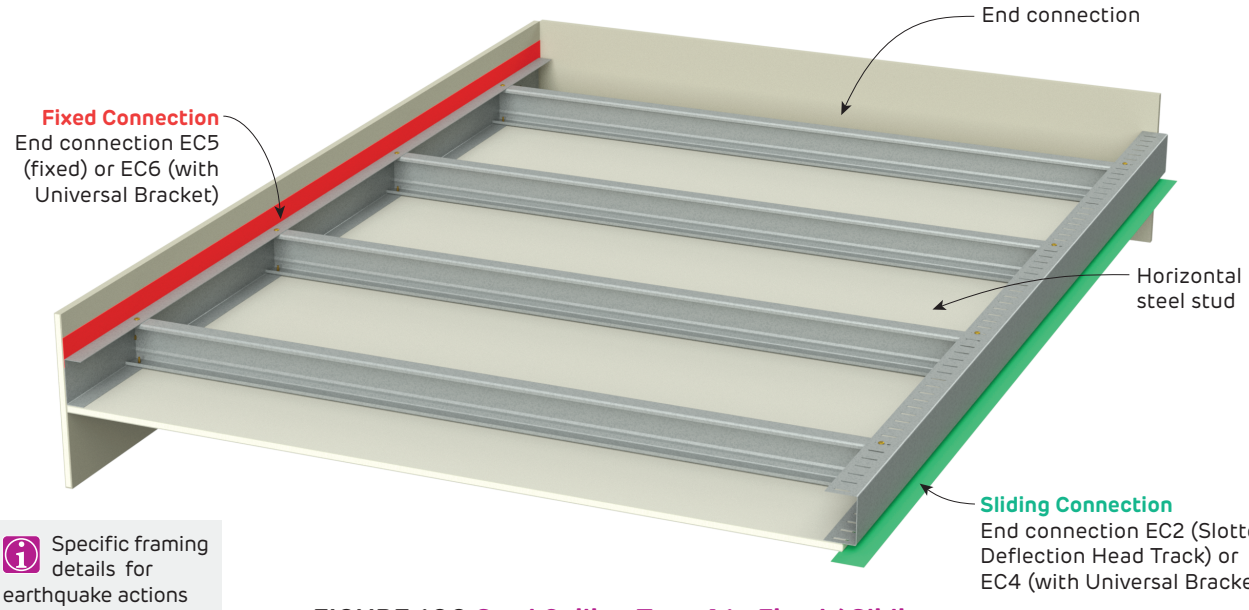

Specific framing details for earthquake actions must be determined by structural design

FIGURE 100 Stud Ceiling Type A1 - Fixed / Sliding
One Side **Fixed** and the other Side **Sliding**
Perspective

Some damage to ceiling linings for finishing details with low tolerance to movement can be expected in a Serviceability Earthquake event.

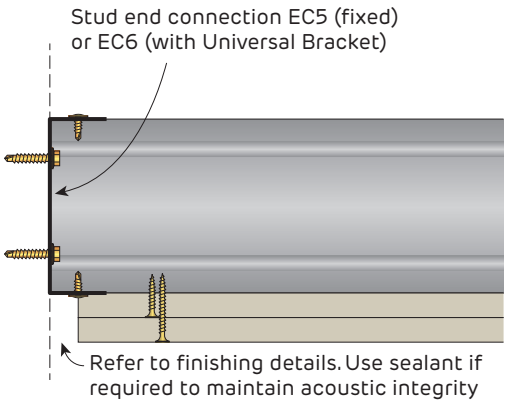

FIGURE 101 Fixed Connection EC5 or EC6
Elevation

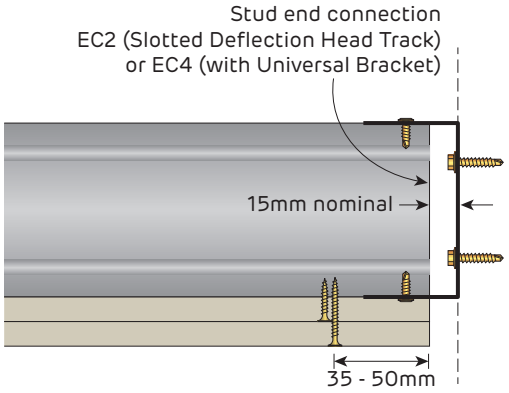

FIGURE 102 Sliding Connection EC2 or EC4
Elevation

Some damage to ceiling linings for finishing details with low tolerance to movement can be expected in a Serviceability Earthquake event.

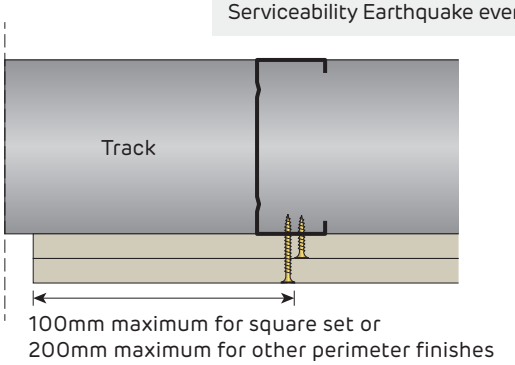

FIGURE 103 End Connection
Section

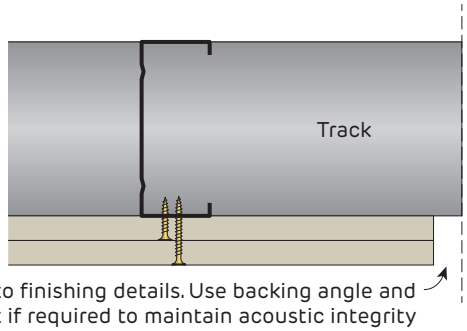

FIGURE 104 End Connection
Section

Fire Rated and Non-Fire Rated
Seismic Details for Stud Ceiling - Type A1 Fixed / Sliding

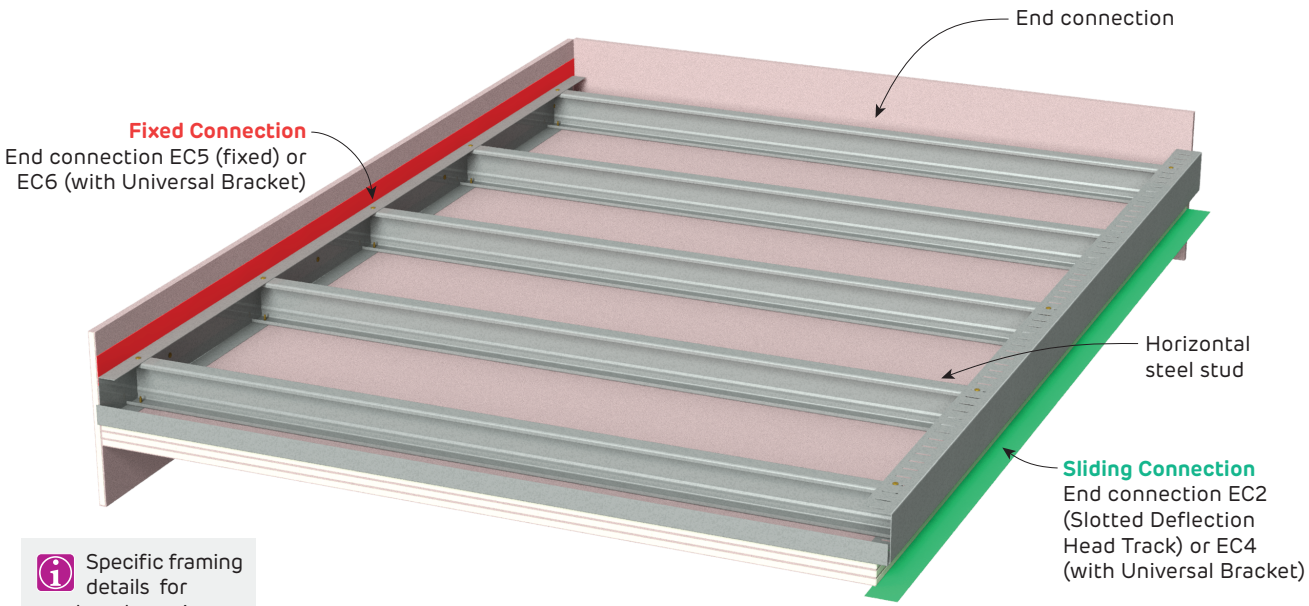

Specific framing details for earthquake actions must be determined by structural design

FIGURE 105 Stud Ceiling Type A1 - Fixed / Sliding
One Side **Fixed** and the other Side **Sliding**
Perspective

Some damage to ceiling linings for finishing details with low tolerance to movement can be expected in a Serviceability Earthquake event.

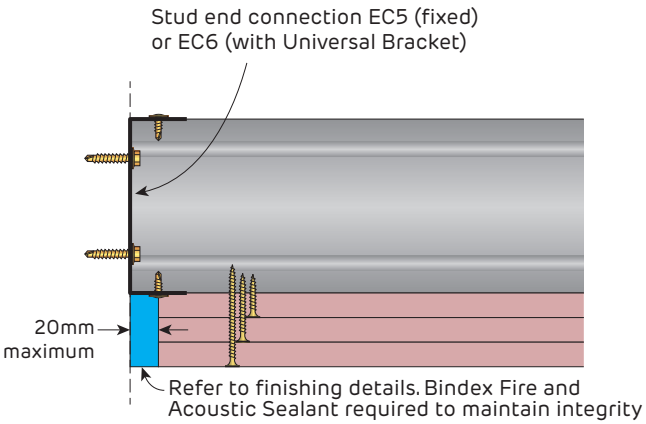

FIGURE 106 Fixed Connection EC5 or EC6
Elevation

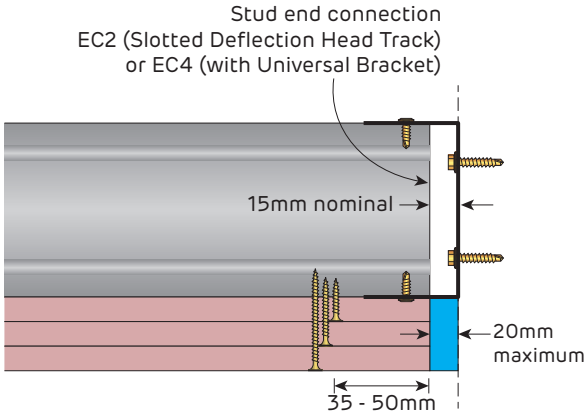

FIGURE 107 Sliding Connection EC2 or EC4
Elevation

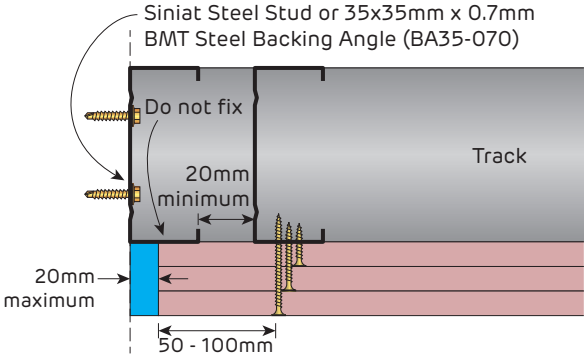

FIGURE 108 End Connection
Section

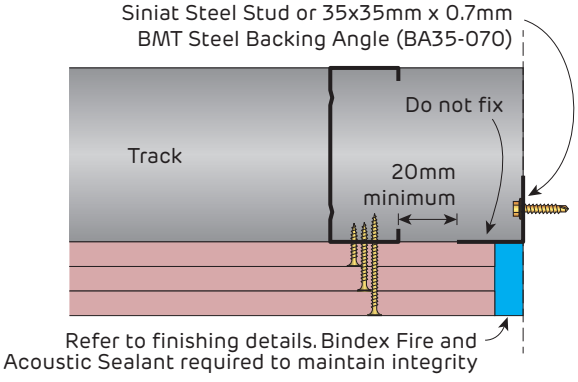

FIGURE 109 End Connection
Section

Fire Rated and Non-Fire Rated
Seismic Details for Internal Stud Ceiling - Type A2 Fixed / Sliding
For Cavities from 65 to 170mm

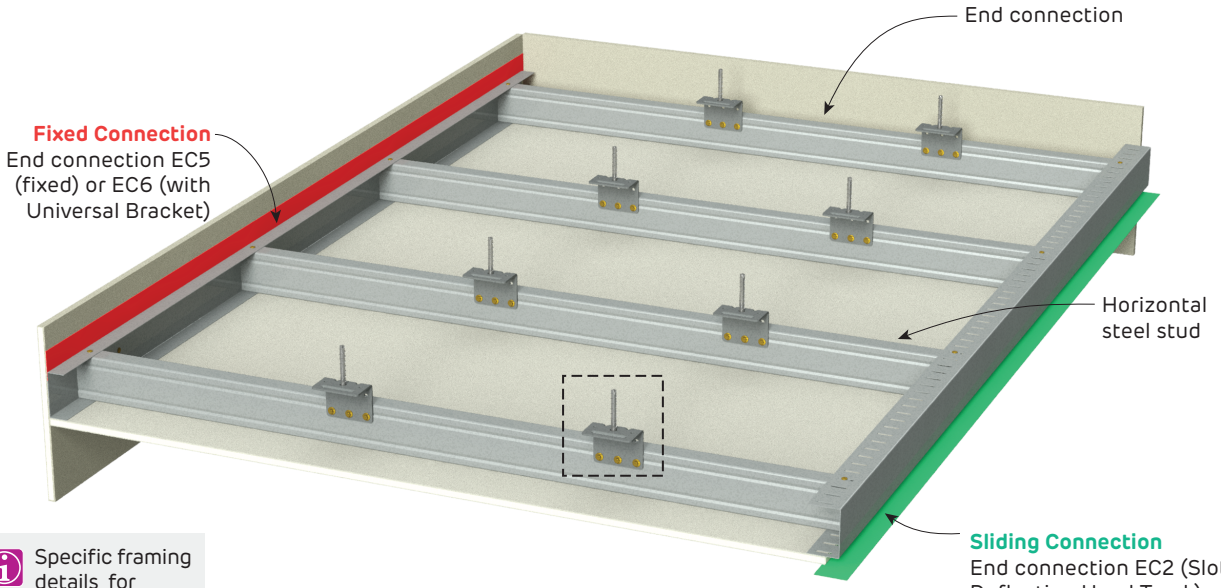

Specific framing details for earthquake actions must be determined by structural design

FIGURE 110 Stud Ceiling Type A2 - Fixed / Sliding
One Side **Fixed** and the other Side **Sliding**
Perspective

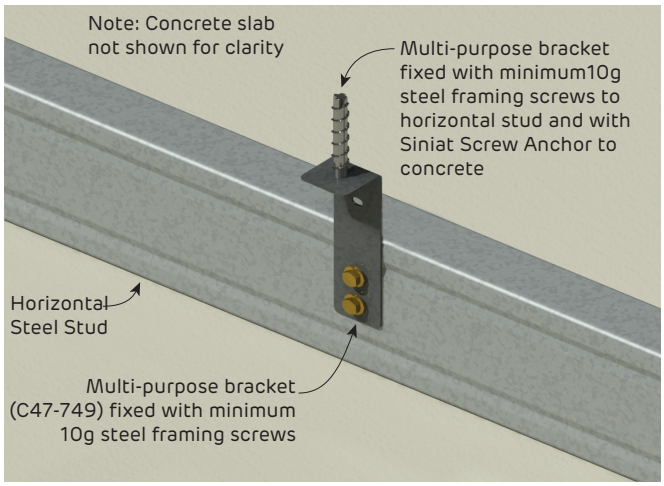

FIGURE 111 Multi-purpose Bracket Connection to Slab
Option 1 Light Duty Connection
Perspective

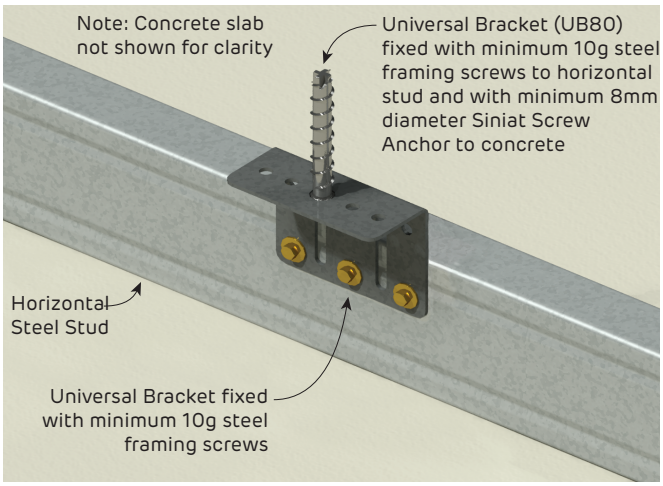

FIGURE 112 Universal Bracket Connection to Slab
Option 2 Medium Duty Connection
Perspective

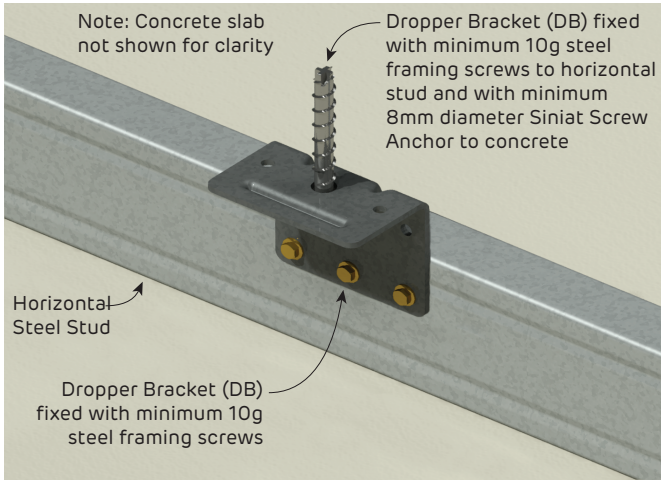

FIGURE 113 Dropper Bracket Connection to Slab
Option 3 Heavy Duty Connection
Perspective

Some damage to ceiling linings for finishing details with low tolerance to movement can be expected in a Serviceability Earthquake event.

Non-Fire Rated

Seismic Details for Stud Ceiling - Type A2 Fixed / Sliding

For Cavities from 65 to 170mm

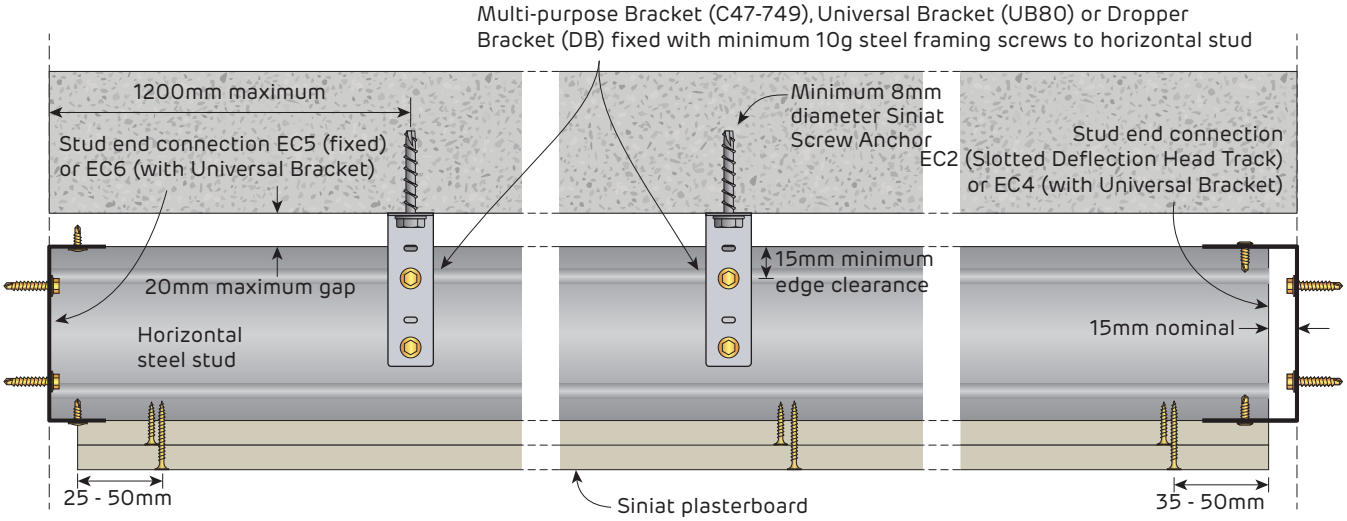

FIGURE 114 Fixed Connection EC5 or EC6
Elevation

FIGURE 115 Multi-Purpose Bracket Connection
Elevation

FIGURE 116 Sliding Connection EC2 or EC4
Elevation

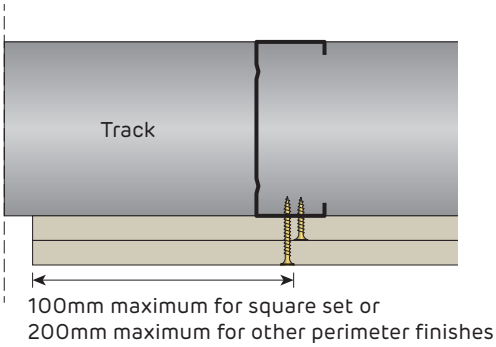

FIGURE 117 End Connection
Section

Some damage to ceiling linings for finishing details with low tolerance to movement can be expected in a Serviceability Earthquake event.

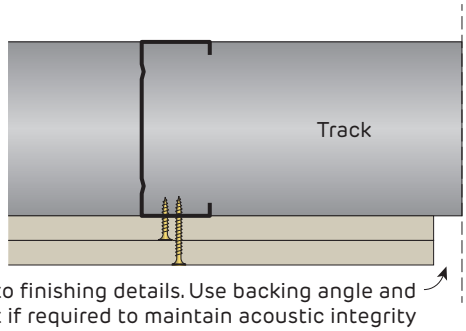

FIGURE 118 End Connection
Section

Fire Rated

Seismic Details for Stud Ceiling - Type A2 Fixed / Sliding

For Cavities from 65 to 170mm

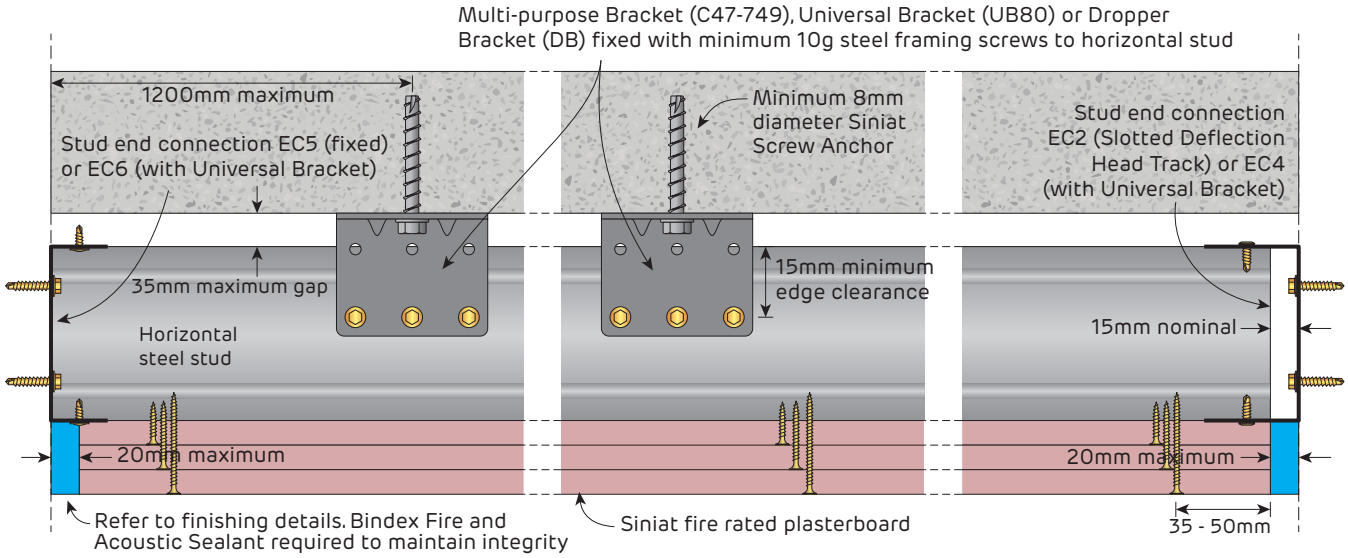

FIGURE 119 Fixed Connection EC5 or EC6
Elevation

FIGURE 120 Dropper Bracket Connection
Elevation

FIGURE 121 Sliding Connection EC2 or EC4
Elevation

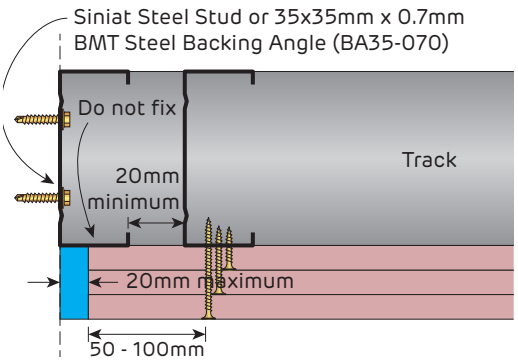

FIGURE 122 End Connection
Section

Some damage to ceiling linings for finishing details with low tolerance to movement can be expected in a Service-ability Earthquake event.

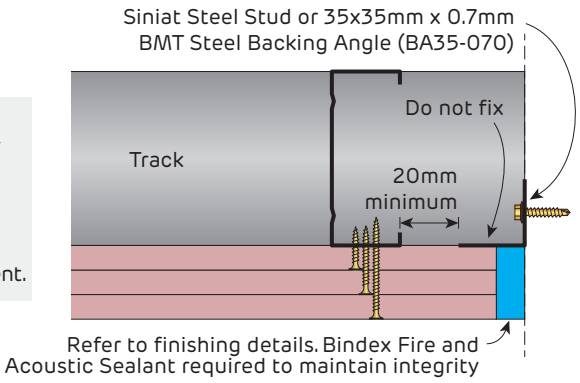

FIGURE 123 End Connection
Section

Fire Rated and Non-Fire Rated
Seismic Details for Stud and Batten Ceiling - Type A3 Fixed / Sliding
For Cavities Above 100mm

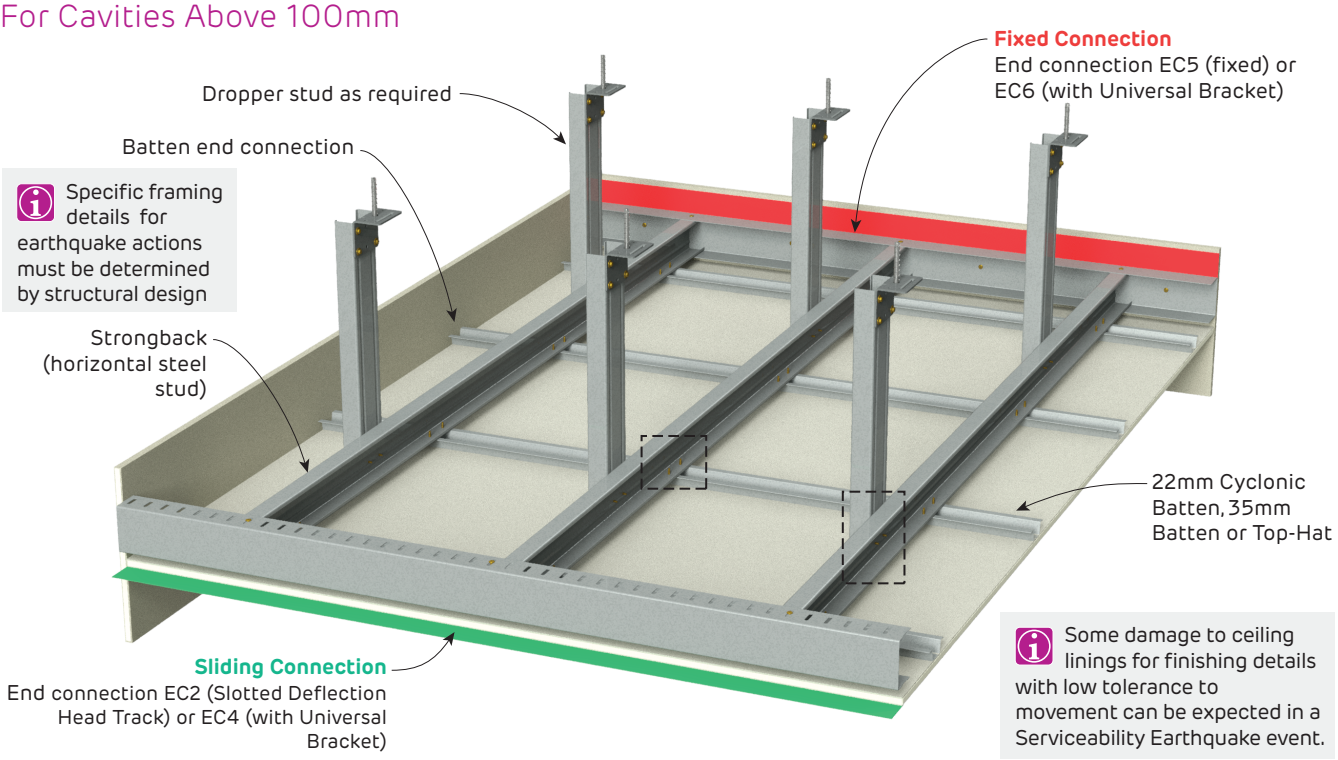

FIGURE 124 Seismic Stud Ceiling Type A3 - Fixed / Sliding
One Side **Fixed** and the other Side **Sliding**
Perspective

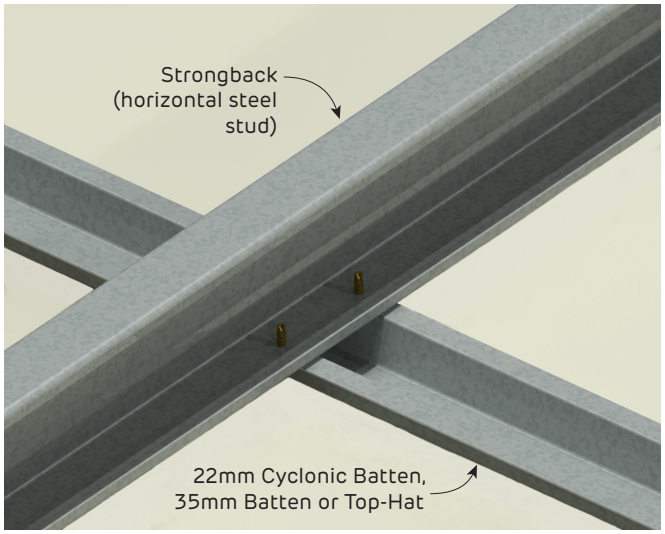

FIGURE 125 Strongback to Batten Connection
Perspective

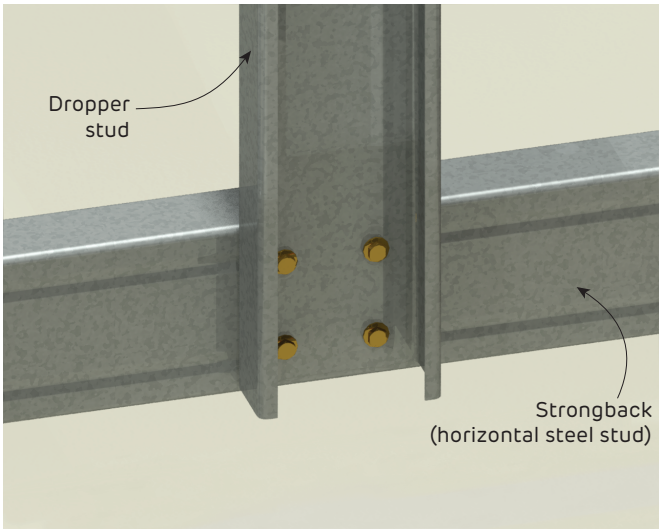

FIGURE 126 Dropper Stud to Strongback Connection
Perspective

Non-Fire Rated

Seismic Details for Stud and Batten Ceiling - Type A3 Fixed / Sliding

For Cavities Above 100mm

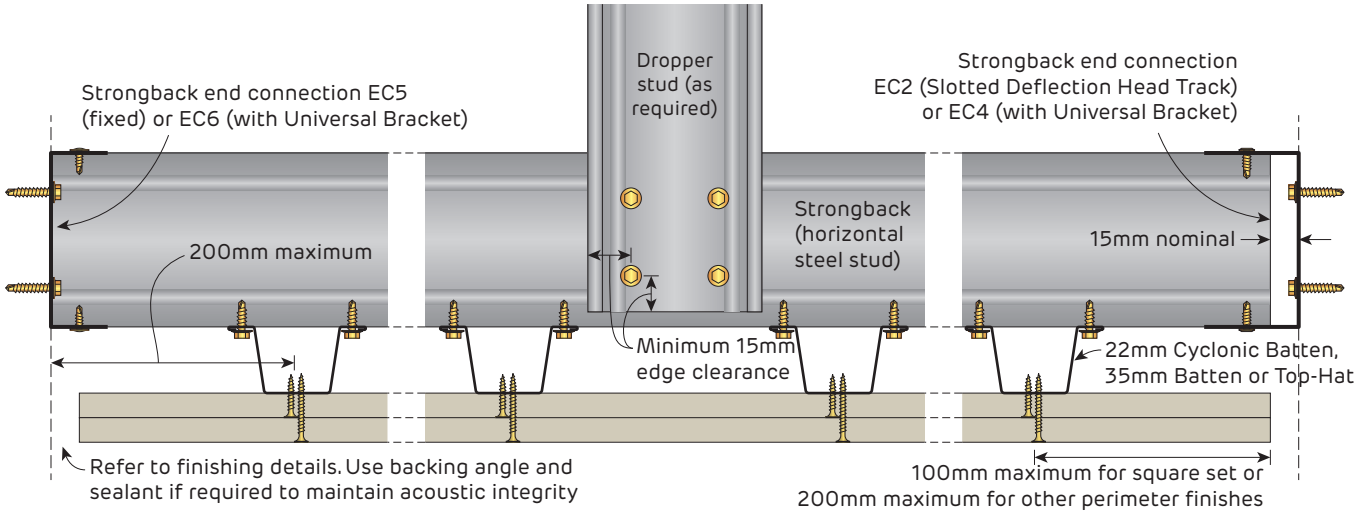

FIGURE 127 Fixed Connection EC5 or EC6
Elevation

FIGURE 128 Dropper Stud to Strongback Connection
Elevation

FIGURE 129 Sliding Connection EC2 or EC4
Elevation

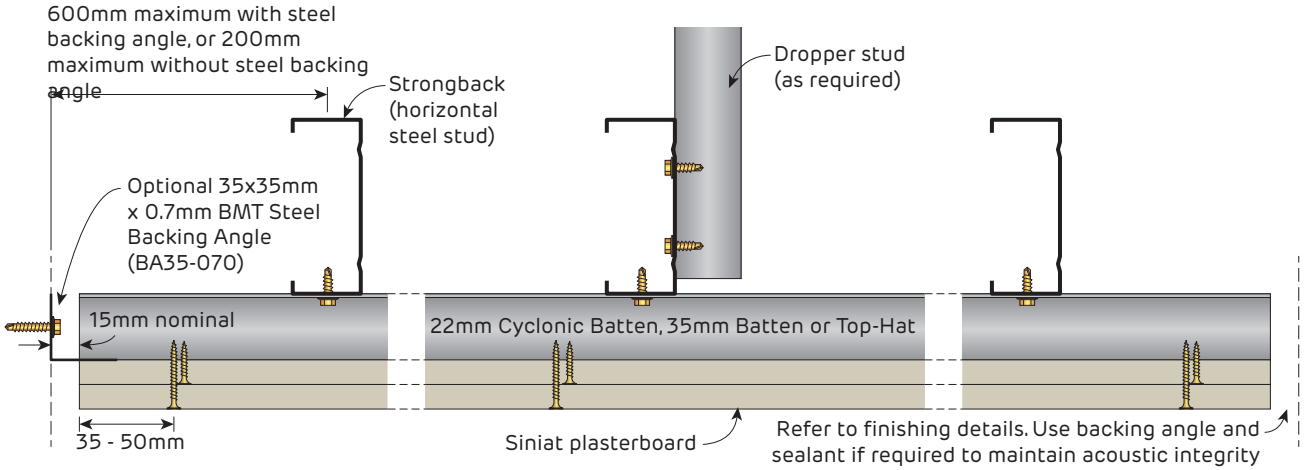

FIGURE 130 Batten End Connection
Section

FIGURE 131 Dropper Stud to Strongback Connection
Section

FIGURE 132 Batten End Connection
Section

Fire Rated

Seismic Details for Stud and Batten Ceiling - Type A3 Fixed / Sliding

For Cavities Above 100mm

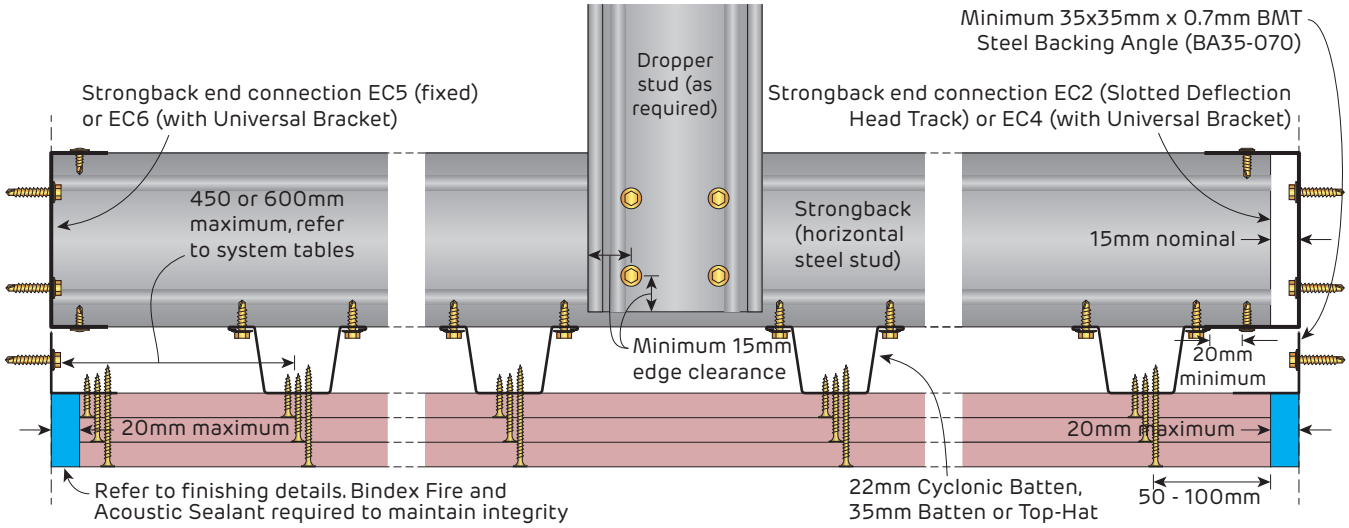

FIGURE 133 Fixed Connection EC5 or EC6
Elevation

FIGURE 134 Dropper Stud to Strongback Connection
Elevation

FIGURE 135 Sliding Connection EC2 or EC4
Elevation

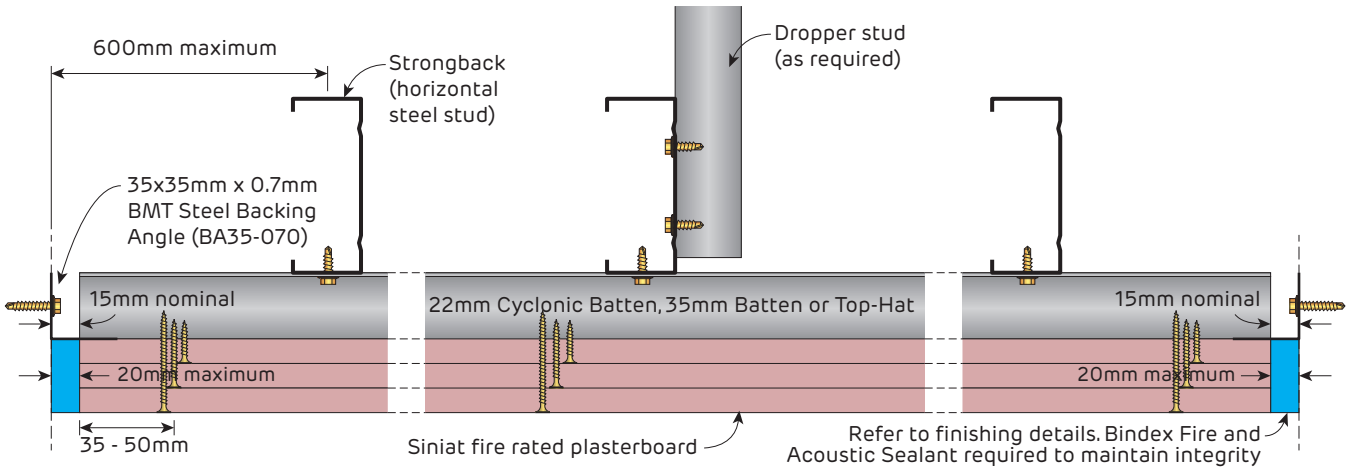

FIGURE 136 Batten End Connection
Section

FIGURE 137 Dropper Stud to Strongback Connection
Section

FIGURE 138 Batten End Connection
Section

Fire Rated and Non-Fire Rated

Seismic Details for Stud and Batten Ceiling - Type C - 2 Way Braced

For Cavities 150mm to 1000mm

Specific framing details for earthquake actions must be determined by structural design

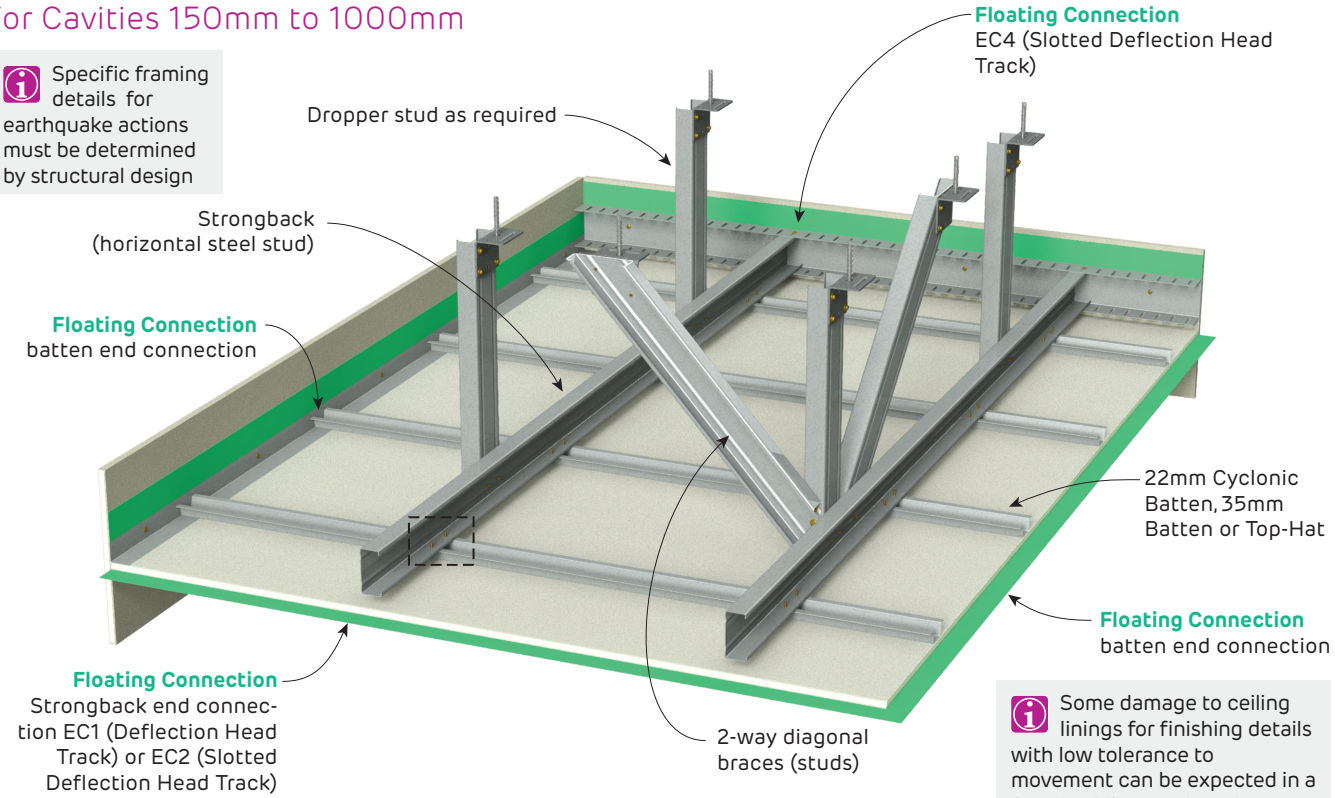

Some damage to ceiling linings for finishing details with low tolerance to movement can be expected in a Serviceability Earthquake event.

FIGURE 139 Stud Ceiling Type C - 2 Way Braced
Four Sides **Floating**
Perspective

For cavity sizes over 1000mm, contact Siniat

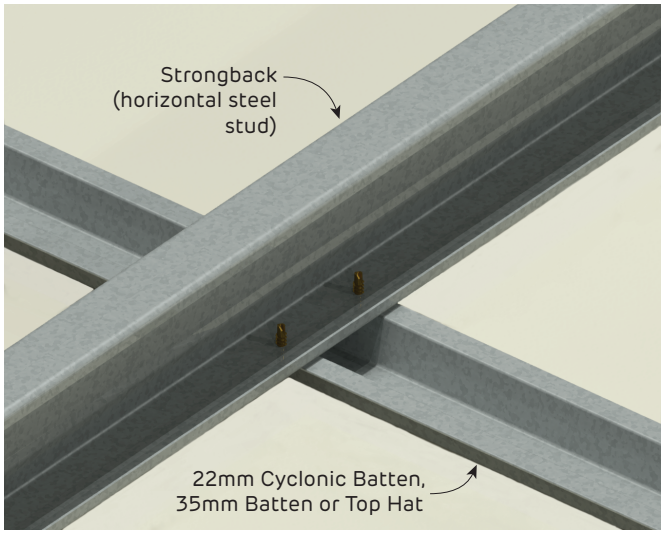

FIGURE 140 Strongback to Batten Connection
Perspective

Fire Rated and Non-Fire Rated

Seismic Details for Stud and Batten Ceiling - Type C - 2 Way Braced

For Cavities 150mm to 1000mm

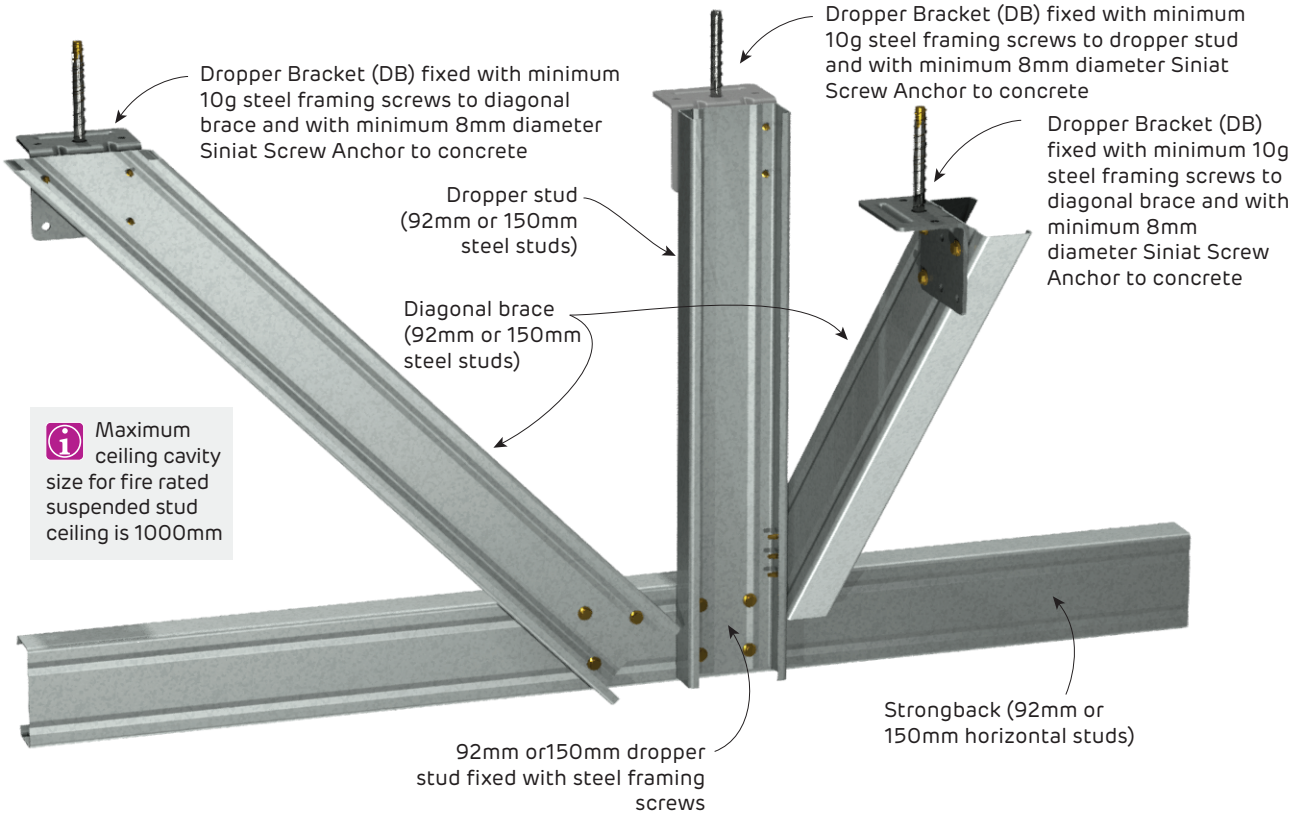

FIGURE 141 Diagonal Braces to Strongback Connection with Dropper Stud
Isometric

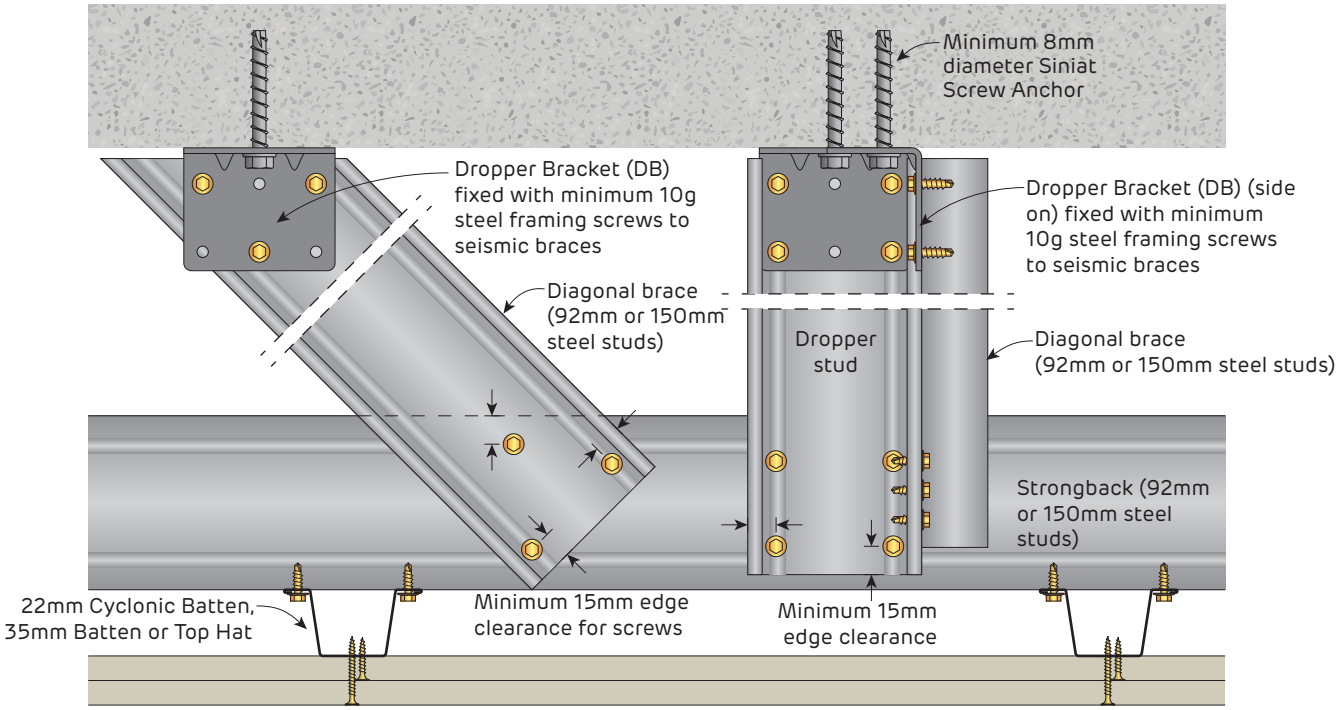

FIGURE 142 Diagonal Seismic Braces to Strongback Connection with Dropper Stud
Section

Non-Fire Rated

Seismic Details for Internal Stud and Batten Ceiling - Type C - 2 Way Braced

For Cavities 150mm to 1000mm

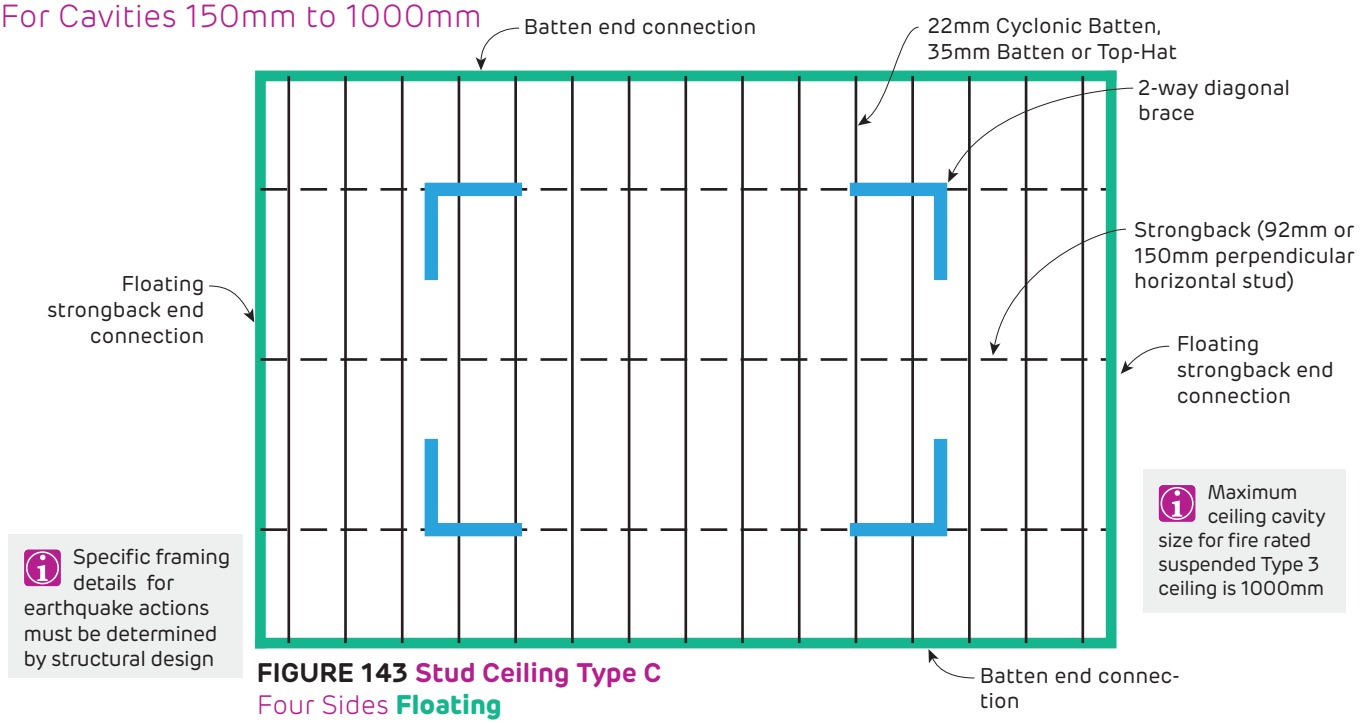

FIGURE 143 Stud Ceiling Type C
Four Sides **Floating**
Plan

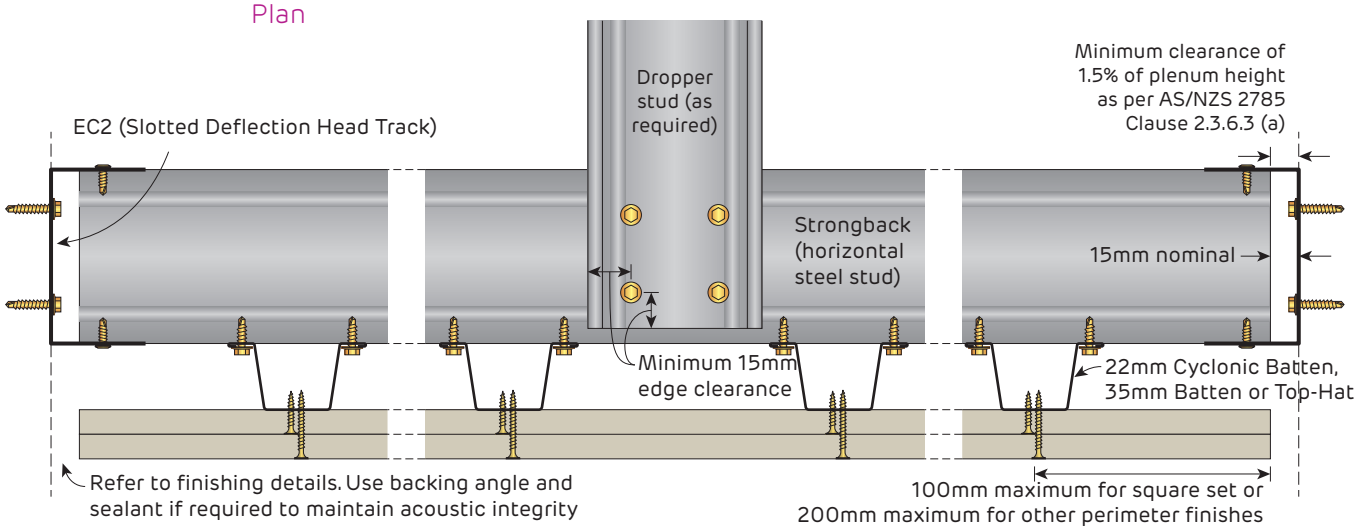

FIGURE 144 Floating Connection EC2 or EC4
Elevation

FIGURE 145 Dropper Stud to Strongback Connection
Elevation

FIGURE 146 Floating Connection EC2 or EC4
Elevation

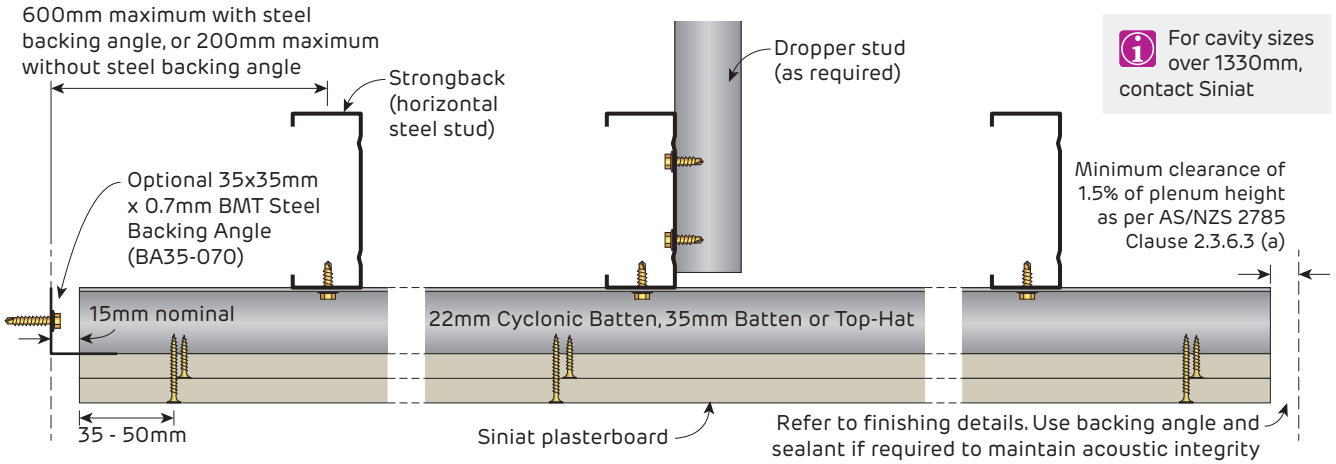

FIGURE 147 Batten End Connection
Section

FIGURE 148 Dropper Stud to Strongback Connection
Section

FIGURE 149 Batten End Connection
Section

Fire Rated

Seismic Details for Internal Stud and Batten Ceiling - Type C 2 Way Braced

For Cavities 150mm to 1000mm

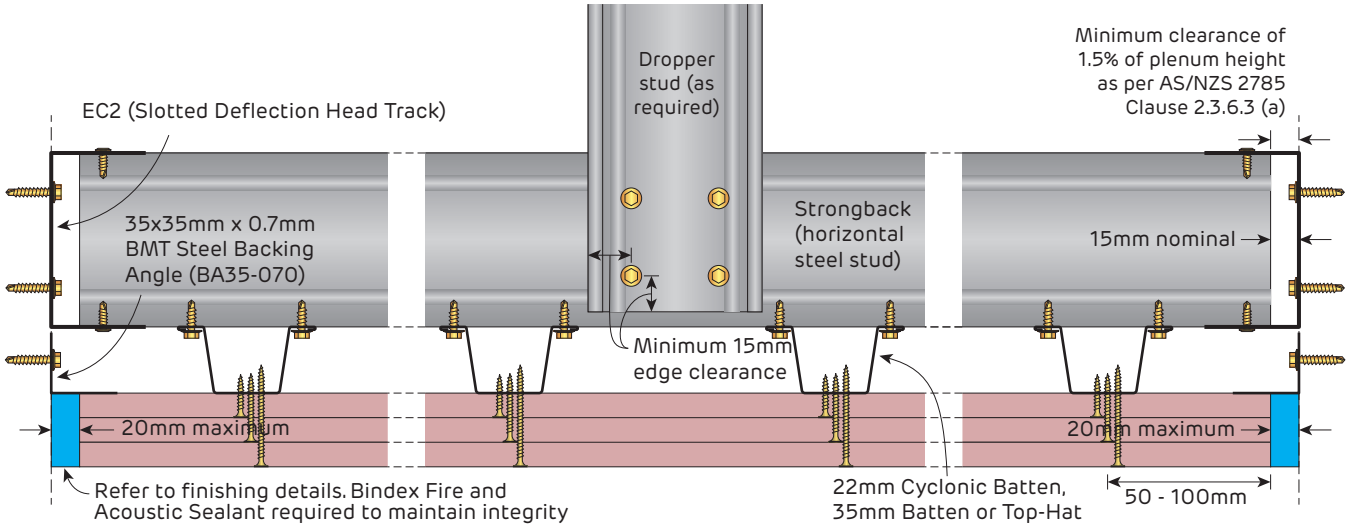

FIGURE 150 Floating Connection EC1 or EC2
Elevation

FIGURE 151 Dropper Stud to Strongback Connection
Elevation

FIGURE 152 Floating Connection EC1 or EC2
Elevation

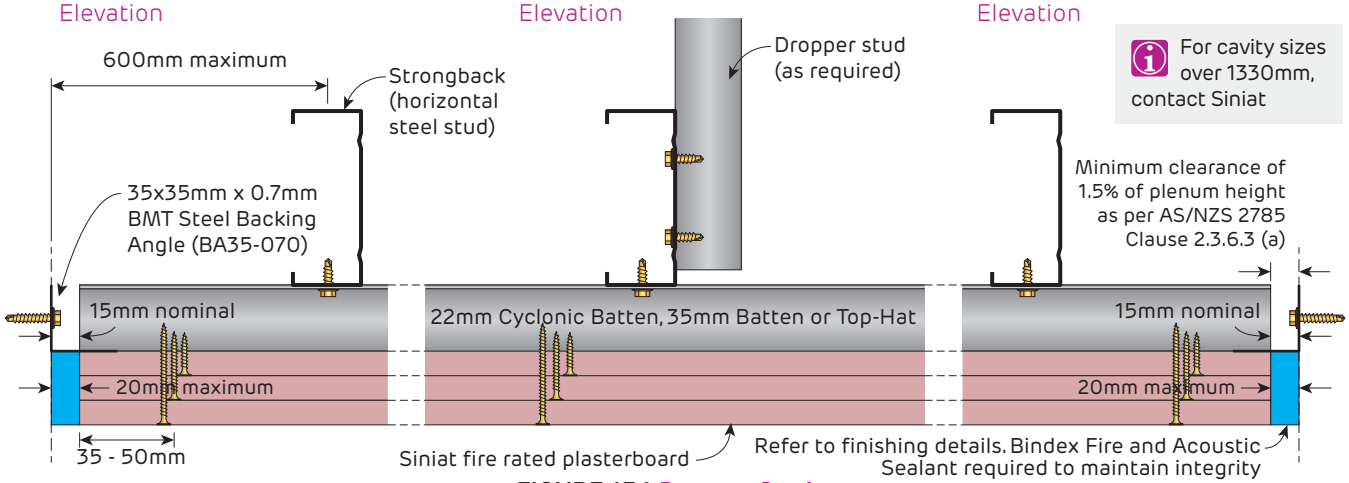

For cavity sizes over 1330mm, contact Siniat

FIGURE 153 Batten End Connection
Section

FIGURE 154 Dropper Stud to Strongback Connection
Section

FIGURE 155 Batten End Connection
Section

Non-Fire Rated
Ceiling Perimeter Finishing Details

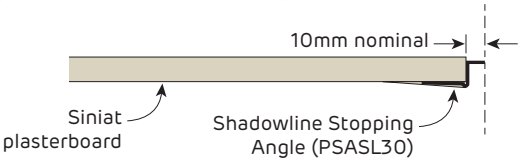

FIGURE 156 Finishing Detail - Shadowline
Section

Some damage to ceiling linings for finishing details with low tolerance to movement can be expected in a Serviceability Earthquake event.

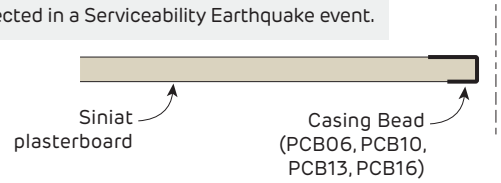

FIGURE 157 Finishing Detail - Casing Bead
Section

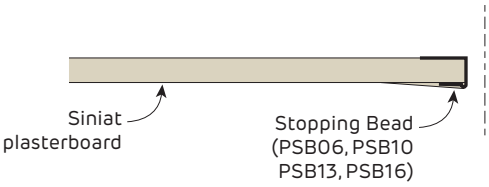

FIGURE 158 Finishing Detail - Stopping Bead
Section

Gaps around the ceiling perimeter may reduce acoustic performance

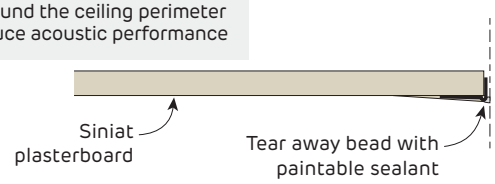

FIGURE 159 Finishing Detail - Square Set
Section

Fire Rated and Non-Fire Rated
Ceiling Perimeter Finishing Details

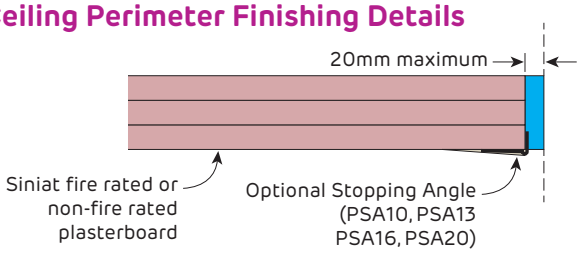

FIGURE 160 Finishing Detail - Stopping Angle
Valid for 1 to 4 layers
Section

Ceilings using a square set finishing detail have low tolerance for building movement and are more prone to cracking and joint peaking

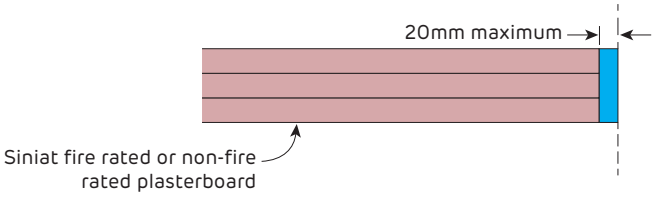

FIGURE 161 Finishing Detail - Bare finish with Sealant
Valid for 1 to 4 layers
Section

Not suitable for single layer ceiling

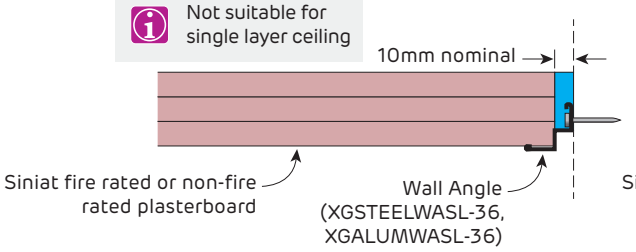

FIGURE 162 Finishing Detail - Shadowline Wall Angle
Valid for 2 to 4 layers only
Section

Not suitable for single layer ceiling

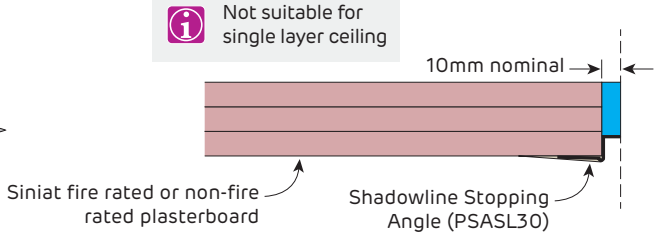

FIGURE 163 Finishing Detail - Shadowline
Valid for 2 to 4 layers only
Section

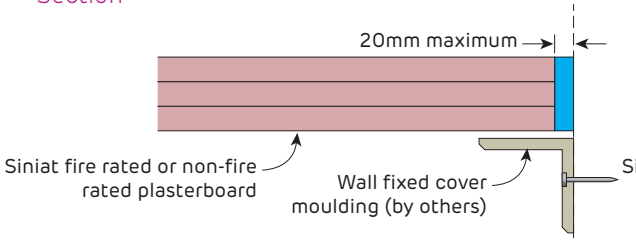

FIGURE 164 Finishing Detail - Wall Cover Moulding
Valid for 1 to 4 layers
Section

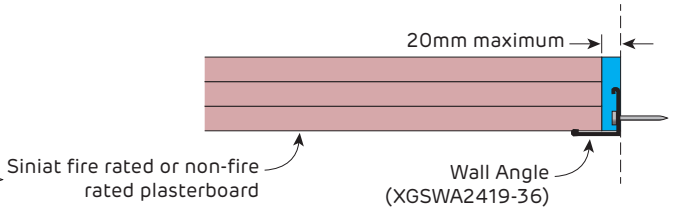

FIGURE 165 Finishing Detail - Wall Angle
Valid for 1 to 4 layers
Section

Some damage to ceiling linings for finishing details with low tolerance to movement can be expected in a Serviceability Earthquake event.

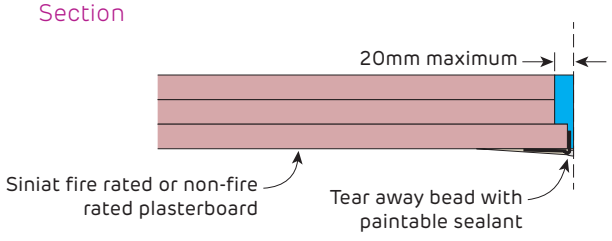

FIGURE 166 Finishing Detail - Square Set
Valid for 1 to 4 layers
Section

Ceilings using a square set finishing detail have low tolerance for building movement and are more prone to cracking and joint peaking



SYSTEMS	**594**
INSTALLATION	**595**
GENERAL REQUIREMENTS	595
FRAMING	595
PLASTERBOARD LAYOUT	596
PLASTERBOARD FIXING	596
CONSTRUCTION DETAILS	**597**

5.4 Shaft Wall Ceiling

Shaft Wall Ceiling is constructed in a similar way to a standard Shaft Wall and uses the same components. It is constructed using steel CH-studs as the ceiling joists.

Shaft Wall Ceiling systems are ideal for building a ceiling when access is only possible from below and a fire rating is required from above, or from above and below.

SHC1

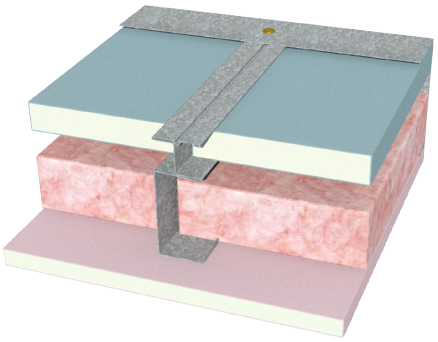

- [Above] 25mm **shaft**liner encased in Shaft Wall CH-studs
- [Below] 1 layer of 16mm **fire**shield

Deflection limited to Span/ 360 or 10mm maximum
fireshield can be substituted with **multi**shield

Fire Resistance Level
60/60/60
rated from above only
Report FC14332

CH-stud Size (mm)		Span (mm)		Thickness (mm)	Sound Insulation Rw (Rw + Ctr) for joists at 600mm centres and thinnest BMT		
Depth	BMT	Ws 0.35 kPa Joist Spacing (mm) 300	600		No insulation	Pink® Partition 50mm 11 kg/m³ R1.2	Report
64	0.55	2330	1850	80	39 (32)	46 (39)	Day Design 3094-17
	0.9	2730	2170				
102	0.55	3400	1960	118	42 (33)	48 (41)	
	0.9	3880	3160				

SHC2

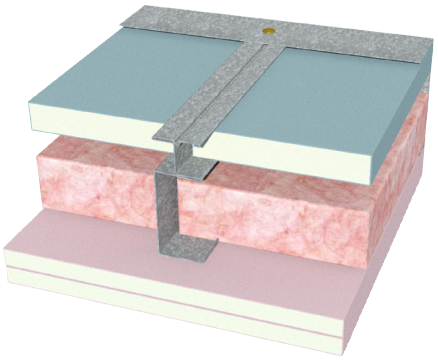

- [Above] 25mm **shaft**liner encased in Shaft Wall CH-studs
- [Below] 2 layers of 16mm **fire**shield

Deflection limited to Span/ 360 or 10mm maximum
fireshield can be substituted with **multi**shield

Fire Resistance Level
60/60/60
rated from above and below
Report FC14332

CH-stud Size (mm)		Span (mm)		Thickness (mm)	Sound Insulation Rw (Rw + Ctr) for joists at 600mm centres and thinnest BMT		
Depth	BMT	Ws 0.35 kPa Joist Spacing (mm) 300	600		No insulation	Pink® Partition 50mm 11 kg/m³ R1.2	Report
64	0.55	2740	1650	96	44 (36)	50 (42)	Day Design 3094-17
	0.9	3000	2570				
102	0.55	3290	1650	134	46 (37)	52 (46)	
	0.9	3920	3090				

SHC3

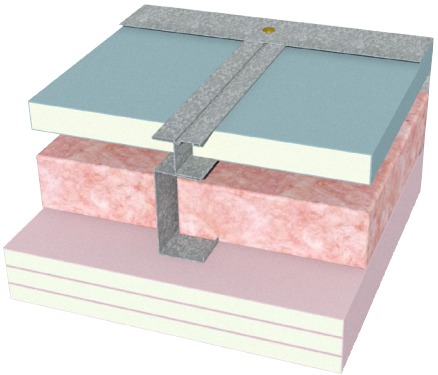

- [Above] 25mm **shaft**liner encased in Shaft Wall CH-studs
- [Below] 3 layers of 16mm **fire**shield

Deflection limited to Span/ 360 or 10mm maximum
fireshield can be substituted with **multi**shield

Fire Resistance Level
90/90/90
rated from above and below
Report FC14332

CH-stud Size (mm)		Span (mm)		Thickness (mm)	Sound Insulation Rw (Rw + Ctr) for joists at 600mm centres and thinnest BMT		
Depth	BMT	Ws 0.35 kPa Joist Spacing (mm) 300	600		No insulation	Pink® Partition 50mm 11 kg/m³ R1.2	Report
64	0.55	2600	1420	112	46 (37)	53 (45)	Day Design 3094-17
	0.9	2850	2440				
102	0.55	2840	1420	150	49 (40)	55 (49)	
	0.9	3790	2660				

SHC4

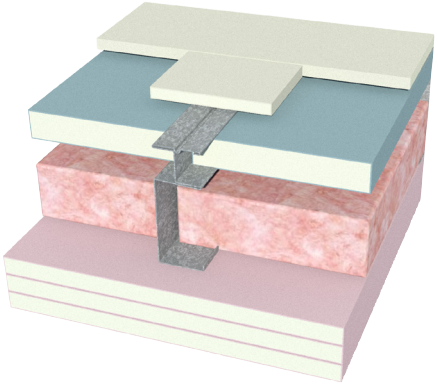

- [Above] 100mm wide strips of minimum 10mm plasterboard over exposed metal framing, adhered with any plaster cornice or back-blocking cement
- 25mm **shaft**liner encased in Shaft Wall CH-studs
- [Below] 3 layers of 16mm **fire**shield

Deflection limited to Span/ 360 or 10mm maximum
fireshield can be substituted with **multi**shield

Fire Resistance Level
120/120/120
rated from above and below
Report FC14332

CH-stud Size (mm)		Span (mm)		Thickness (mm)	Sound Insulation Rw (Rw + Ctr) for joists at 600mm centres and thinnest BMT		
Depth	BMT	Ws 0.35 kPa Joist Spacing (mm) 300	600		No insulation	Pink® Partition 50mm 11 kg/m³ R1.2	Report
64	0.55	2600	1420	122	46 (37)	53 (45)	Day Design 3094-17
	0.9	2850	2440				
102	0.55	2840	1420	160	49 (40)	55 (49)	
	0.9	3790	2660				

General Requirements

	Fire Rated
Install control joints in plasterboard ceilings: › At 12m maximum intervals › At all control joints in the structure › At any change in the substrate › At the junction of a larger room and passageway.	✓
Shaft Wall Ceilings are non-trafficable. Do not walk on plasterboard ceilings!	✓
Limit dead loads on plasterboard ceilings to 2 kg/m^2.	✓
Only joint the face layer. As a minimum, use paper tape with either masta**base** or masta**longset**.	✓
Use approved fire rated penetration details. Fire penetrations may require fire collars or other devices to maintain fire performance.	✓
Use **bindex** fire and acoustic sealant on all gaps and around perimeter. Vermiculite plaster is not permitted.	✓
Attach ceiling fixtures to framing members only. Ensure the framing is designed to carry any additional load.	✓

Framing

	Fire Rated
CH-studs as per framing table or structural design. Space CH-studs at 600mm (full **shaft**liner) or 300mm centres (**shaft**liner cut in half lengthways)	✓
Twist CH-studs into perimeter Shaft Wall J-tracks and Shaft Wall Deflection Head J-tracks.	✓
For Shaft Wall components and installation sequence, refer to Section 3.6 Shaft Wall.	✓

Table 1 Maximum Perimeter Track Anchor Spacing

Stud Spacing (mm)	Maximum Anchor Spacing (mm)
600	600
300	450

1. Additional anchors 100mm maximum from track ends.
2. 102mm studs require 2 anchors across width.

Anchor Demand From System Tables

1. Maximum anchor shear and tension demand = 1.13 kN
2. Anchors at maximum 1.5 x stud spacing up to 600mm maximum, and 100mm maximum from ends.
3. 102mm tracks where minimum 2 anchors across width.

Siniat Internal Wind Load Calculator

Refer to Section 2.3 for assistance determining the relevant internal wind pressures for a specific project. Or use the Siniat Internal Wind Load Calculator by clicking on the link or by using your phone's camera on the QR code.

Plasterboard Layout

Fireshield Layout	Fire Rated
Install **fire**shield perpendicular to the framing members.	✓
Stagger face layer butt joints by 600mm minimum on adjoining sheets and between layers.	✓
First layer butt joints must be backed by a CH-stud joist.	✓
Stagger recessed edges by 300mm minimum between layers.	✓
Shaftliner Layout	
If the ceiling width exceeds the length of **shaft**liner, position the **shaft**liner butt joints within the first and last third of the ceiling. [Refer to Section 3.6]	✓
Stagger **shaft**liner butt joints for adjacent panels and reinforce with horizontal CH-stud cut to fit between the ceiling CH-studs. [Refer to Section 3.6]	✓

Minimise butt joints by using long sheets.

Plasterboard Fixing

	Fire Rated
Use the 'Screw Only Method'. Stud adhesive is not permitted.	✓
For the installation of **fire**shield to CH-studs joists, refer to Section 5.1.	✓
Drive screws to just below the sheet surface, taking care not to break the paper linerboard. For over-driven screws, install another screw 20mm away. Leave or remove the over-driven screw and patch.	✓
Laminating screws can be used to fix butt joints in the second and third layer.	✓

Screw Type and Minimum Size for the Installation of Plasterboard to Steel

Plasterboard Thickness	1st Layer	2nd Layer	3rd Layer
16mm **fire**shield	6g x 30mm screw	6g x 45mm screw *	8g x 65mm screw *
25mm **shaft**liner	6g x 45mm screw #	-	-

1. For steel ≤ 0.75mm BMT, use fine thread needle point screws.
2. For steel ≥ 0.75mm BMT, use fine thread drill point screws.
3. *10g x 38mm Laminating screws may be used as detailed in installation diagrams.
4. # For securing Shaftliner to J-track when the J-track is used as an end stud.

Fire Rated
Details for Shaft Wall Ceilings

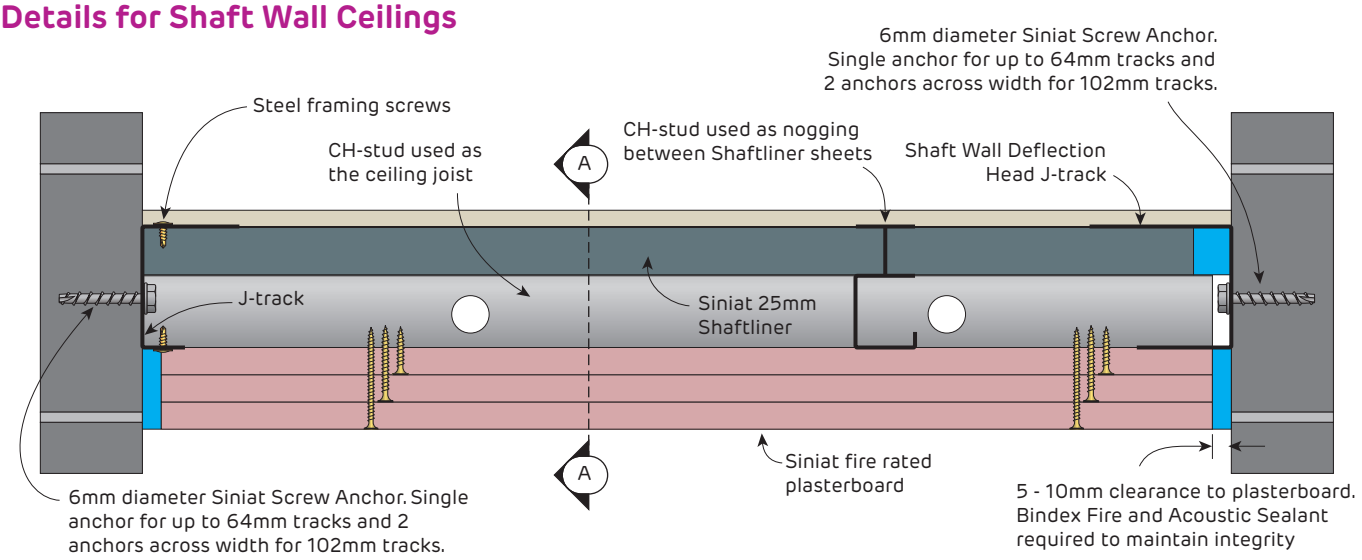

FIGURE 1 Shaft Wall Ceiling to Masonry Wall
Section

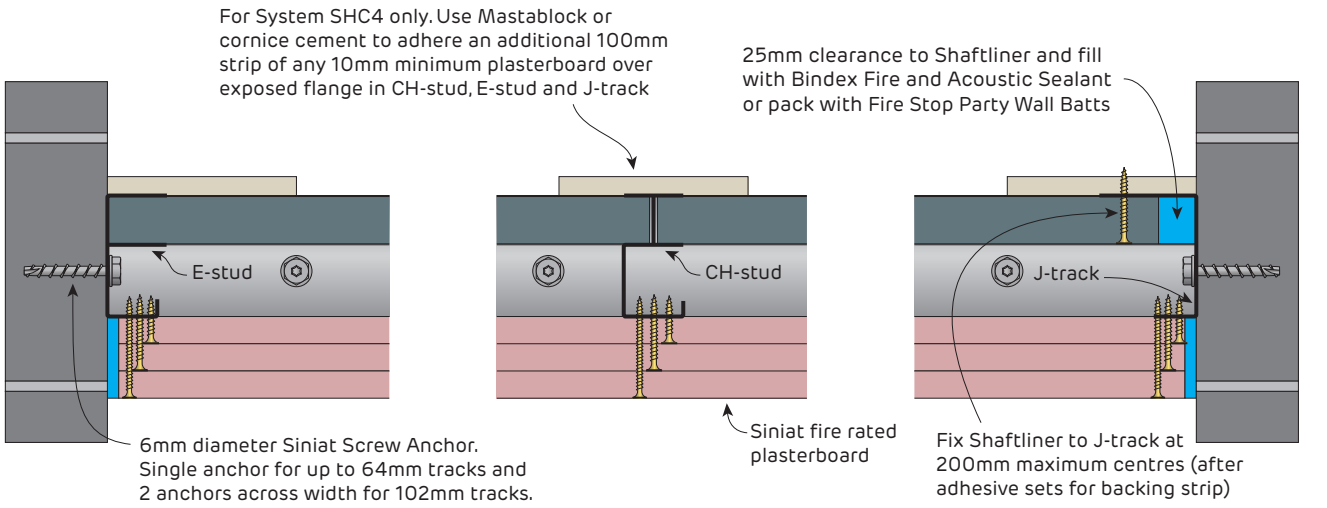

SECTION A-A Ceiling Start
E-stud
Section

SECTION A-A Ceiling Middle
CH-stud
Section

SECTION A-A Ceiling End
J-track
Section

Fill any gaps with Bindex Fire and Acoustic Sealant to maintain integrity

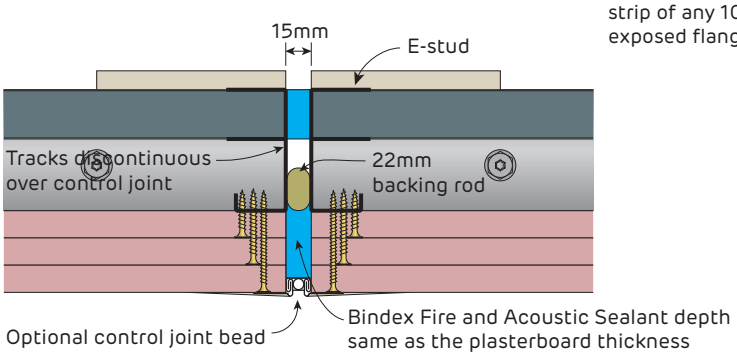

FIGURE 2 Shaft Wall Ceiling Control Joint
Section

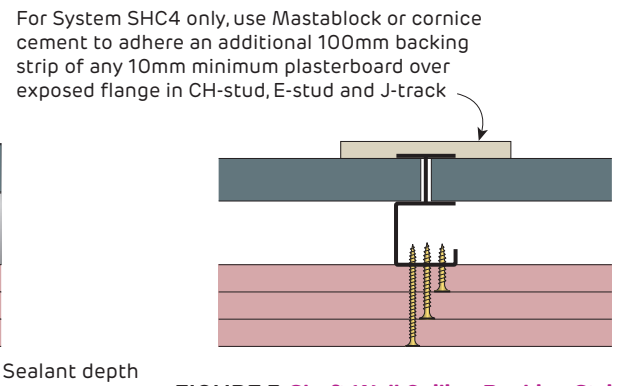

FIGURE 3 Shaft Wall Ceiling Backing Strips
System SHC4 only
Section

Fire Rated
Shaft Wall Ceiling and Supporting Load Bearing Wall

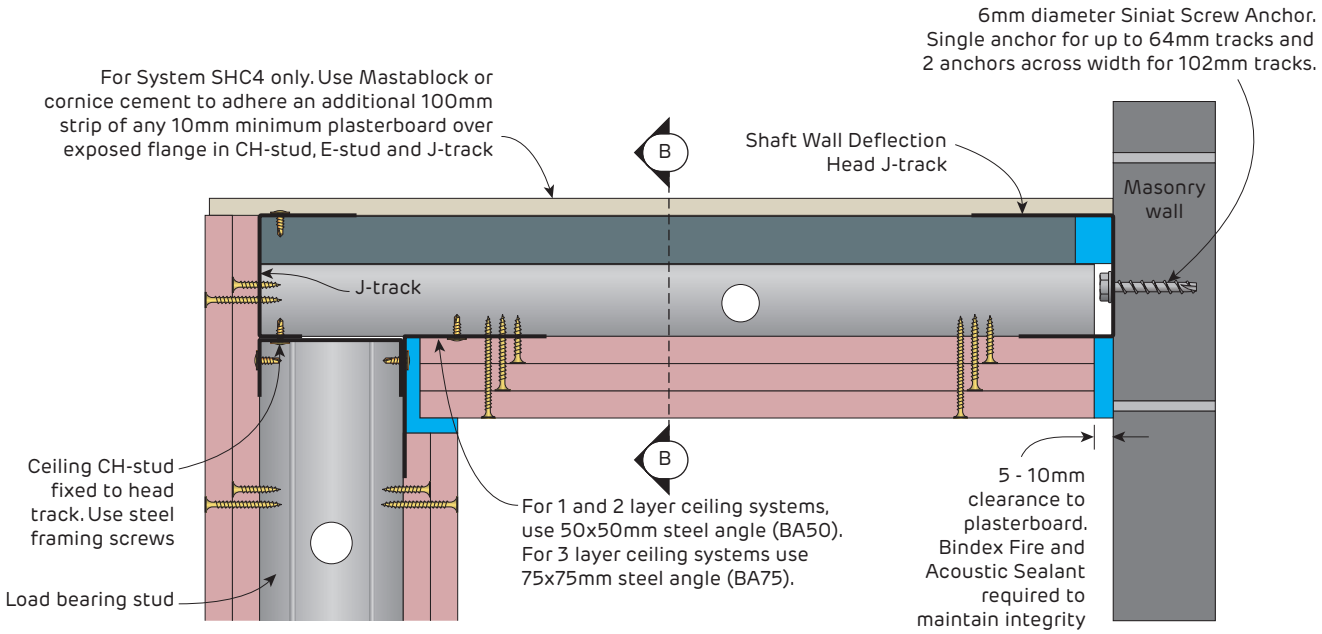

FIGURE 4 Shaft Wall Ceiling to Steel Stud Wall
SSW317 and SHC4
Section

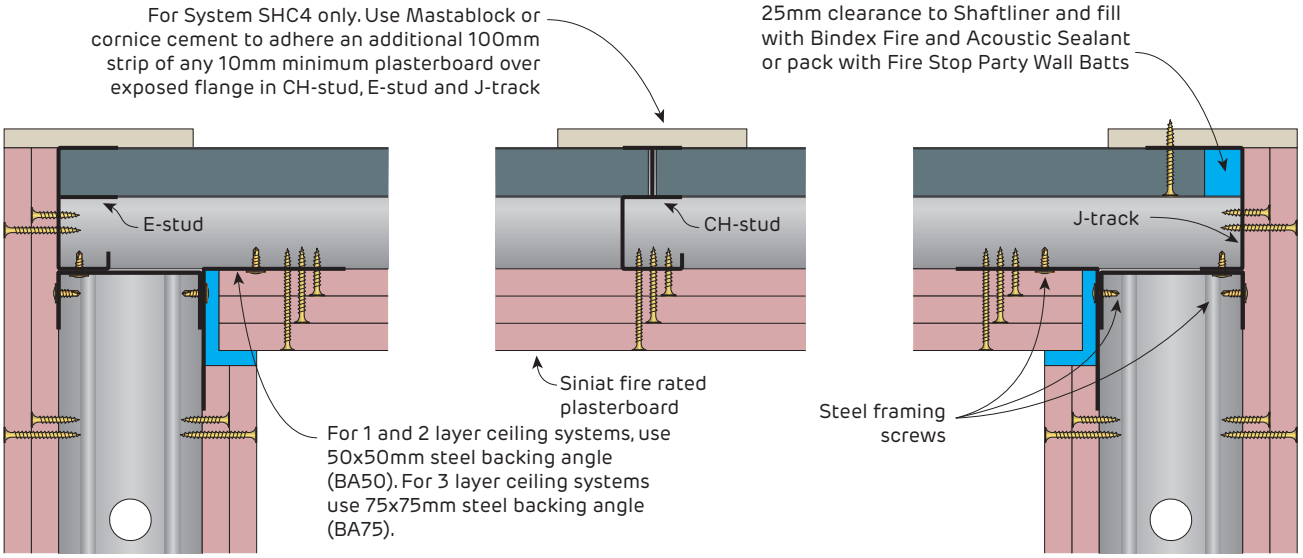

SECTION B-B Ceiling Start
E-stud
Section

SECTION B-B Ceiling Middle
CH-stud
Section

SECTION B-B Ceiling End
J-track
Section

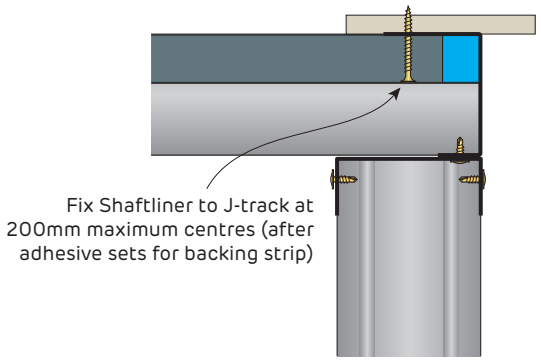

SECTION B-B Construction of Ceiling End
J-track
Section

Fire Rated
Shaft Wall Ceiling using Structural Beams

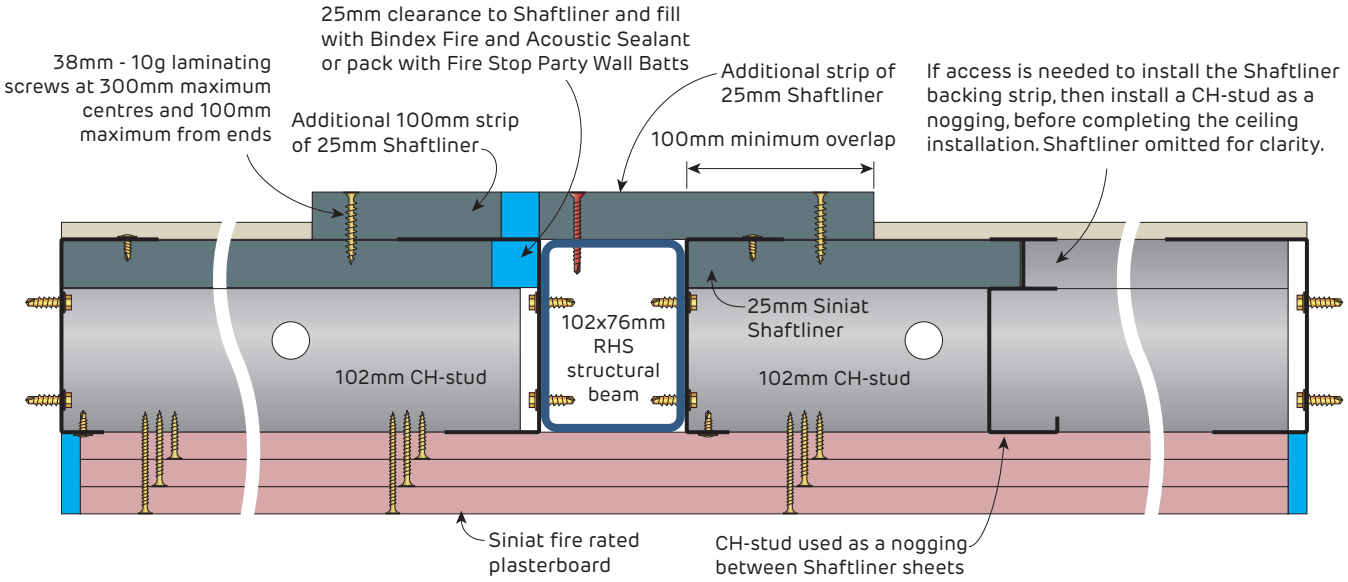

FIGURE 5 Shaft Wall Ceiling with RHS Structural Beam
Used to increase the span of 102mm CH-stud Shaft Wall Ceilings
Section

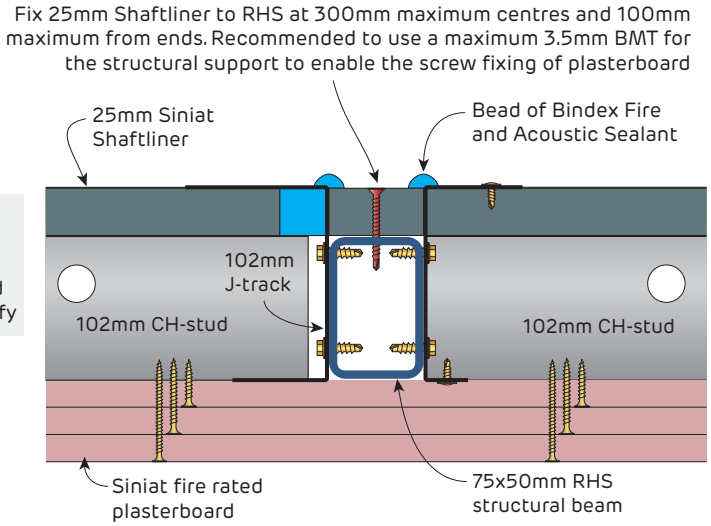

Additional 100mm strip of any 10mm minimum plasterboard over exposed flange in CH-stud, E-stud and J-track is not shown for clarify

FIGURE 6 Alternative Detail with RHS Structural Beam
Used to increase the span of 102mm CH-stud Shaft Wall Ceilings
Section

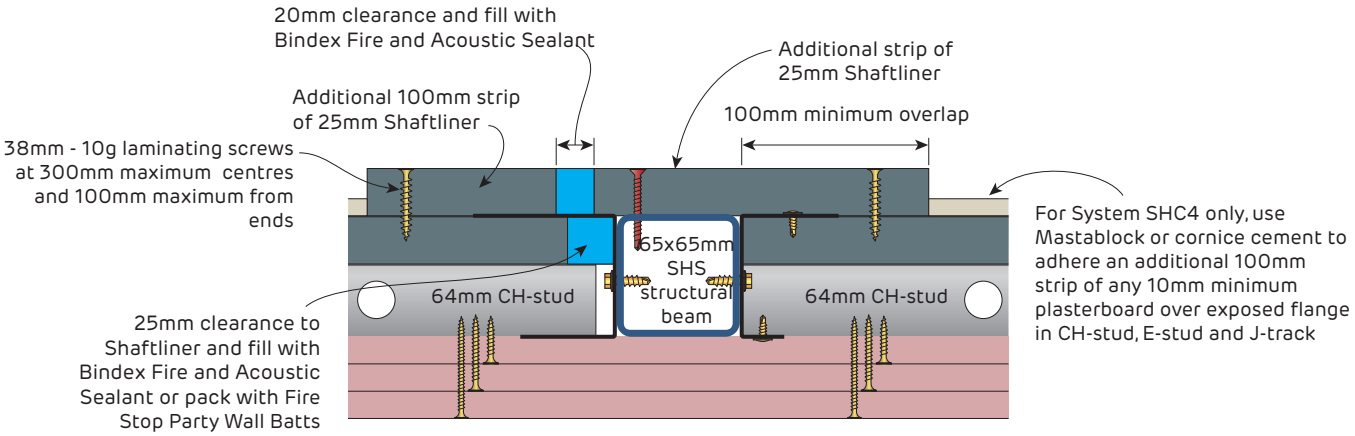

FIGURE 7 Shaft Wall Ceiling with SHS Structural Beam
Used to increase the span of 64mm CH-stud Shaft Wall Ceilings
Section

Fire Rated
Shaft Wall Ceiling using Structural Beams

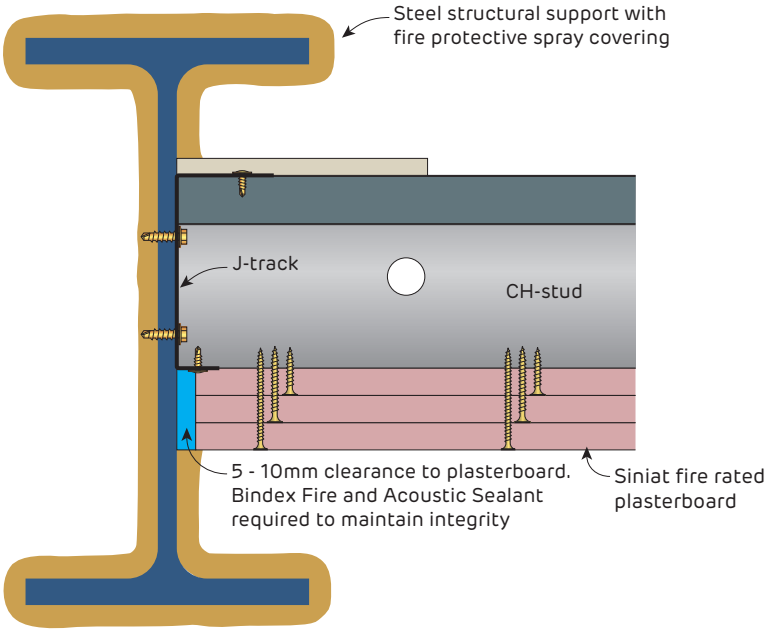

FIGURE 8 Shaft Wall Ceiling to Structural Beam
Section

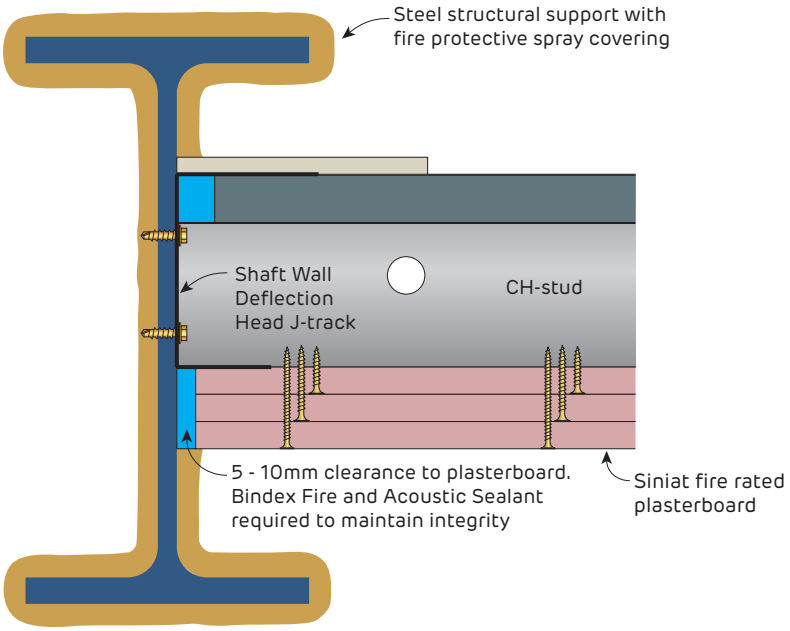

FIGURE 9 Shaft Wall Ceiling to Structural Beam
Section

Fire Rated

Details for Shaft Wall Bulkhead - Fire Rated from Both Directions

Using Wall Systems SHW312 or SHW317 with Ceiling Systems SHC3 or SHC4

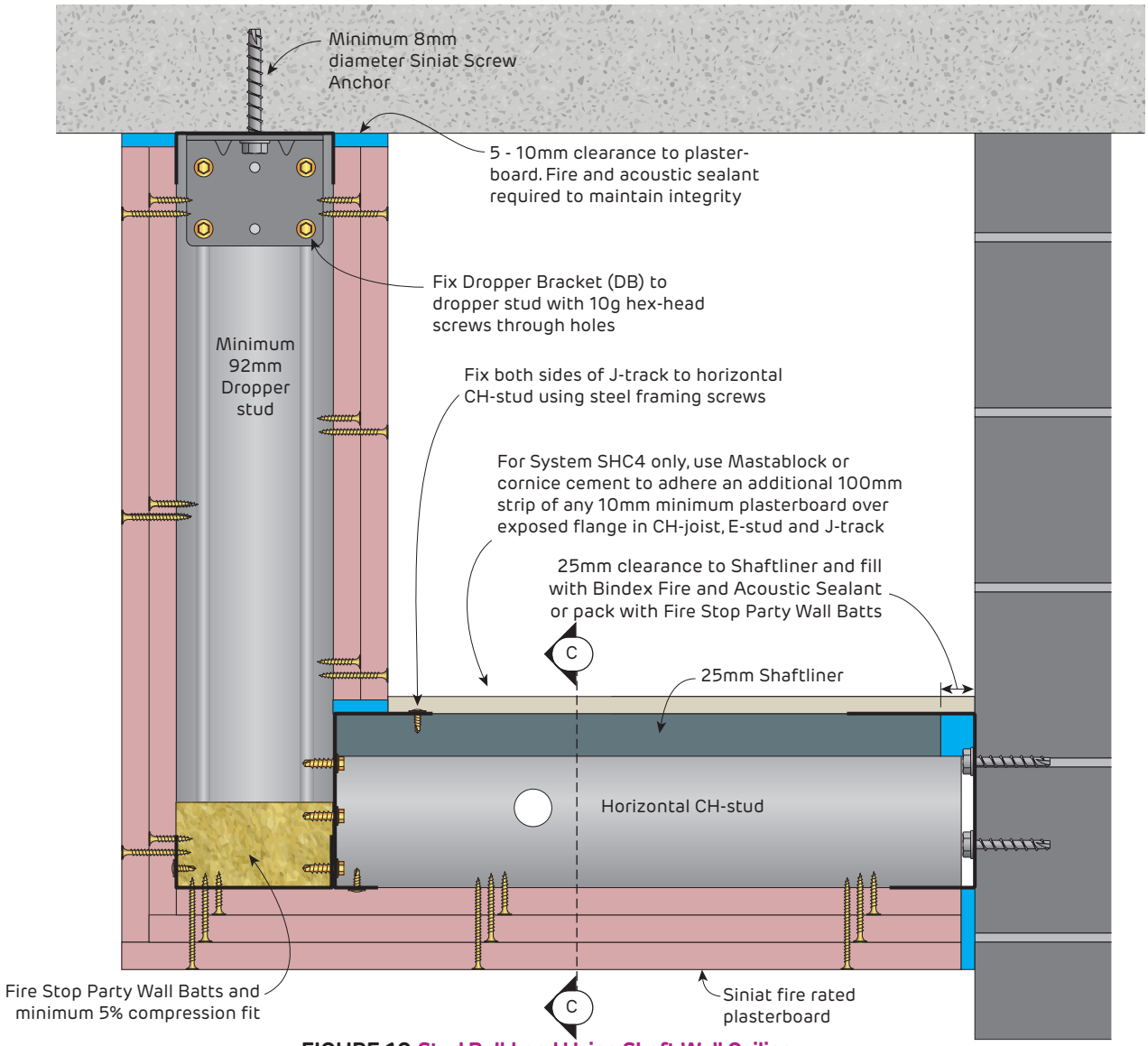

FIGURE 10 Stud Bulkhead Using Shaft Wall Ceiling
Fire rated from both directions (Built from outside only)
Section

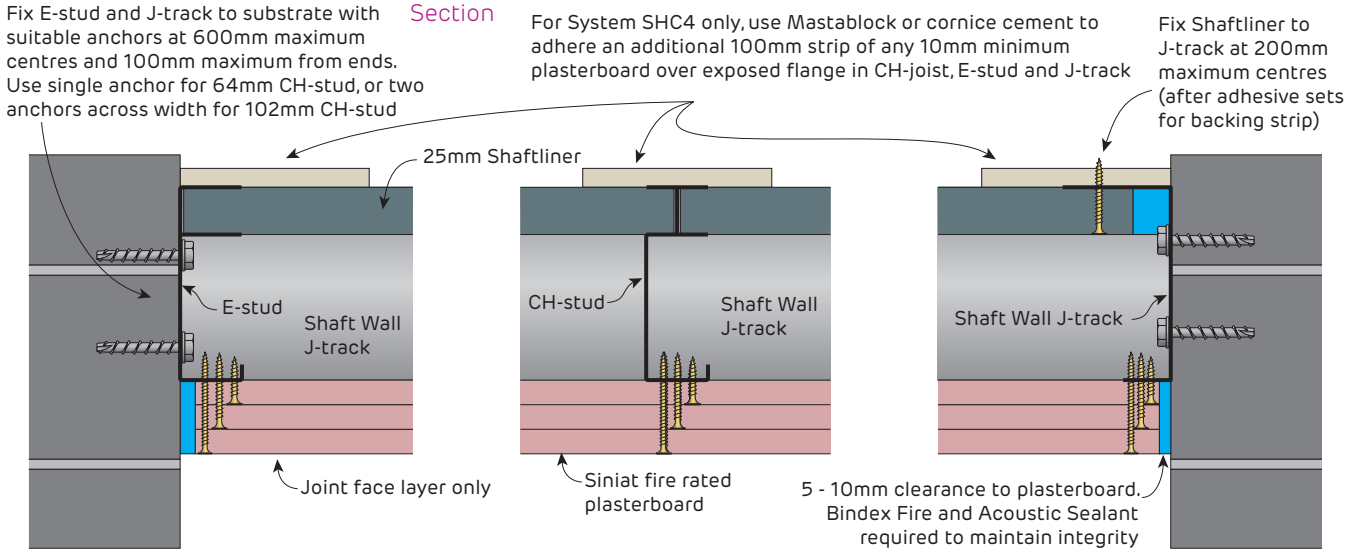

SECTION C-C Ceiling Start
Horizontal E-stud fixed to substrate
Section

SECTION C-C Ceiling Middle
Section

SECTION C-C Ceiling End
Horizontal J-track fixed to substrate
Section

Fire Rated
Shaft Wall Ceiling and Bulkhead using Structural Beams

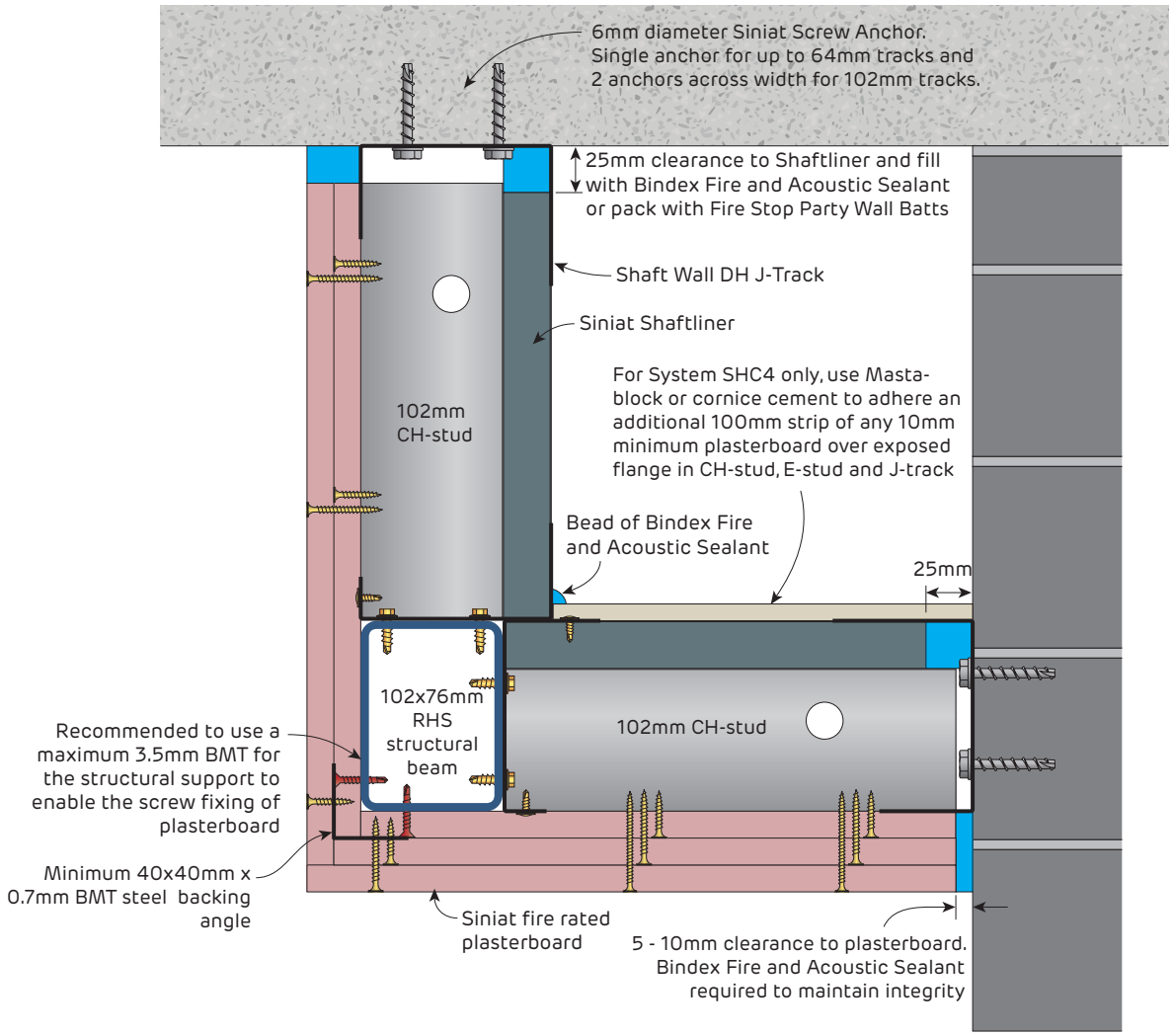

FIGURE 11 Shaft Wall Ceiling and Bulkhead with RHS Structural Beam
SHW2 and SHC4
Section

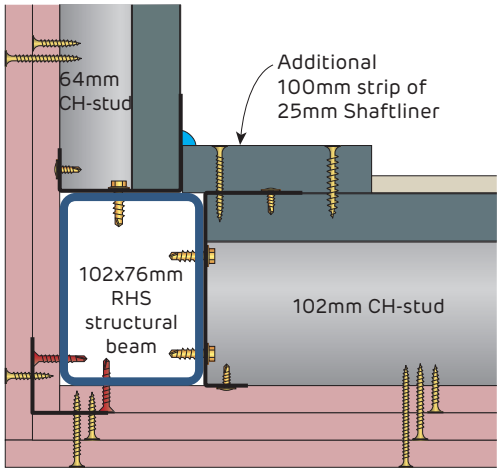

FIGURE 12 Alternative detail using RHS Beam with 64 and 102mm CH-Studs
SHW2 and SHC4
Section

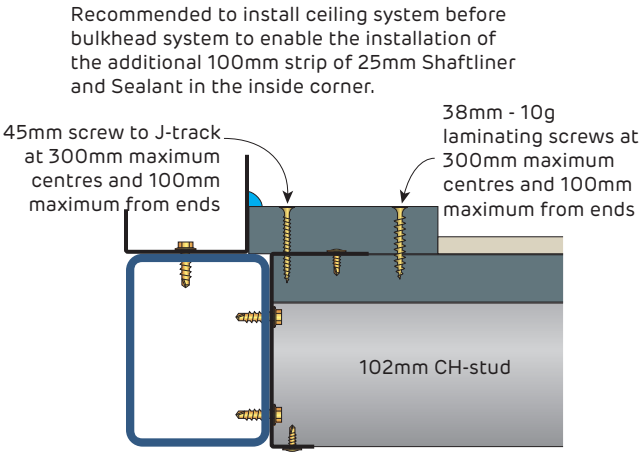

FIGURE 13 Construction of Shaft Wall Ceiling and Bulkhead
Section

Fire Rated
Shaft Wall Ceiling and Bulkhead using Structural Beams

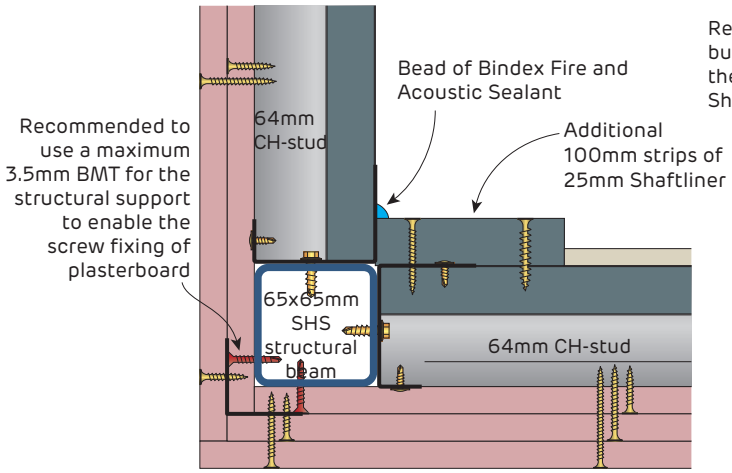

FIGURE 14 Detail using SHS Beam with 64mm CH-Studs
SHW2 and SHC4
Section

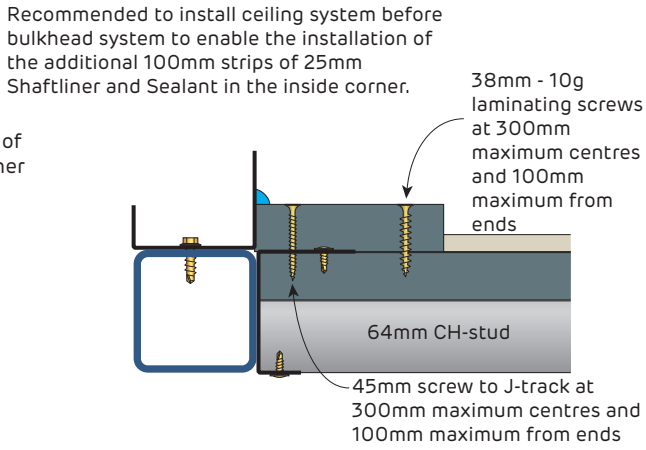

FIGURE 15 Construction of Shaft Wall Ceiling and Bulkhead
Section

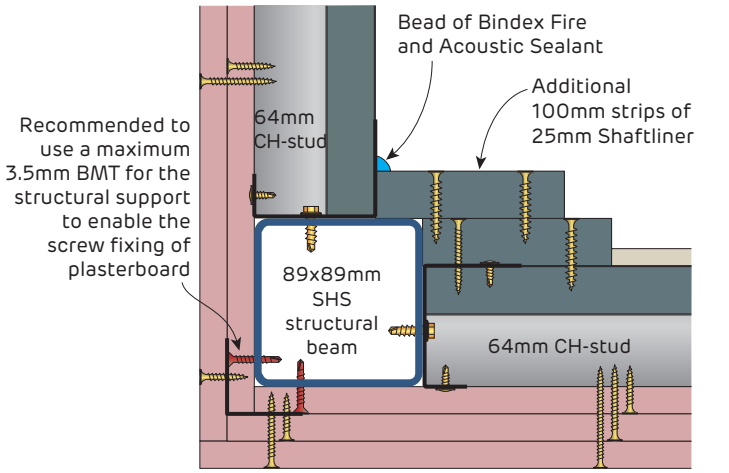

FIGURE 16 Alternative Detail using SHS Beam with 64mm CH-Studs
SHW2 and SHC4
Section

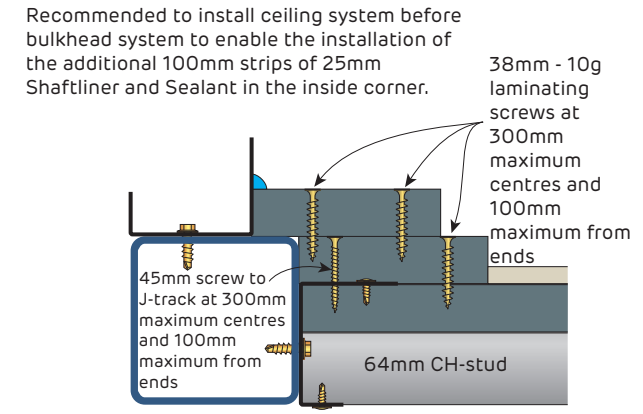

FIGURE 17 Construction of Shaft Wall Ceiling and Bulkhead
Section

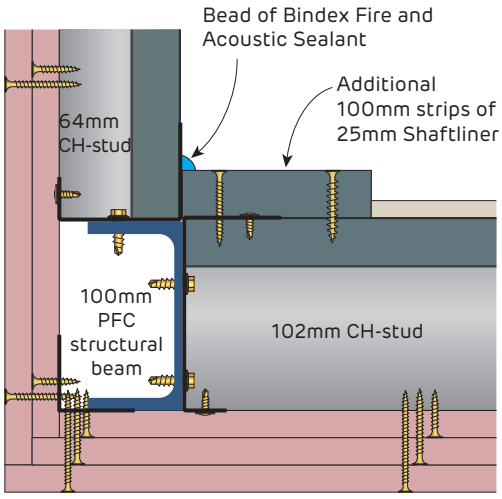

FIGURE 18 Detail using PFC Beam with 64 and 102mm CH-Studs
SHW2 and SHC4
Section

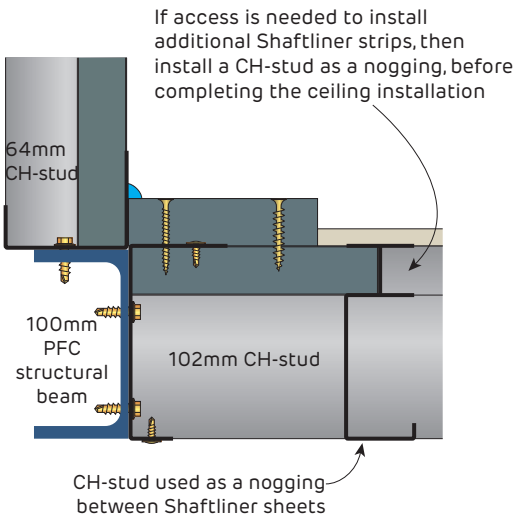

FIGURE 19 Construction of Shaft Wall Ceiling and Bulkhead
Section

Fire Rated
Shaft Wall Bulkhead using Structural Columns

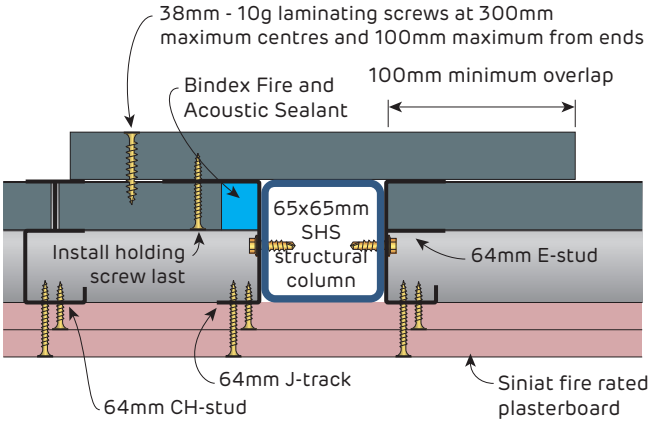

FIGURE 20 Shaft Wall Bulkhead using SHS Column with 64mm CH-Studs
SHW2
Plan

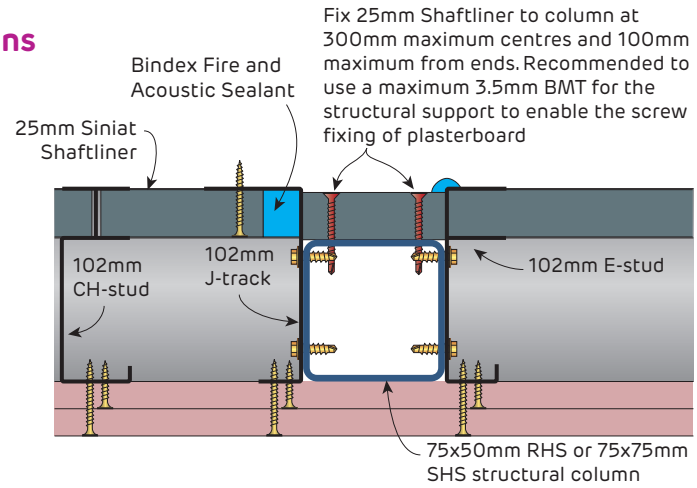

FIGURE 21 Shaft Wall Bulkhead using SHS Column with 102mm CH-Studs
SHW2
Plan

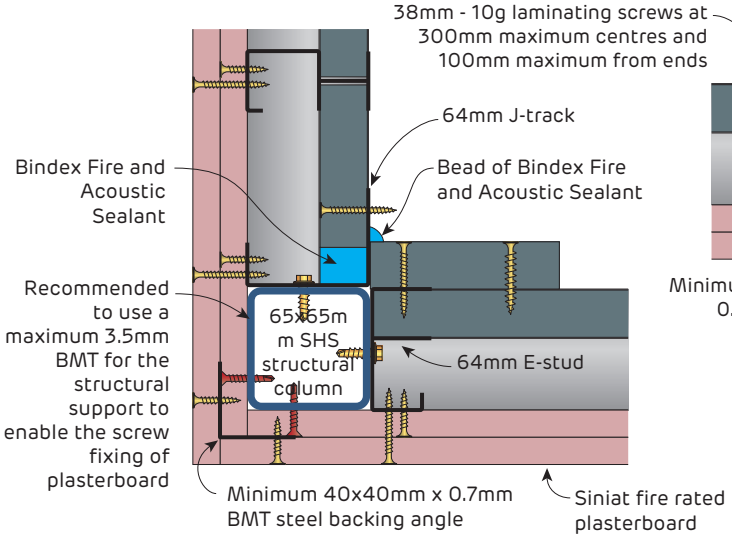

FIGURE 22 Shaft Wall Bulkhead External Corner using SHS Column with 64mm CH-Studs
SHW2
Plan

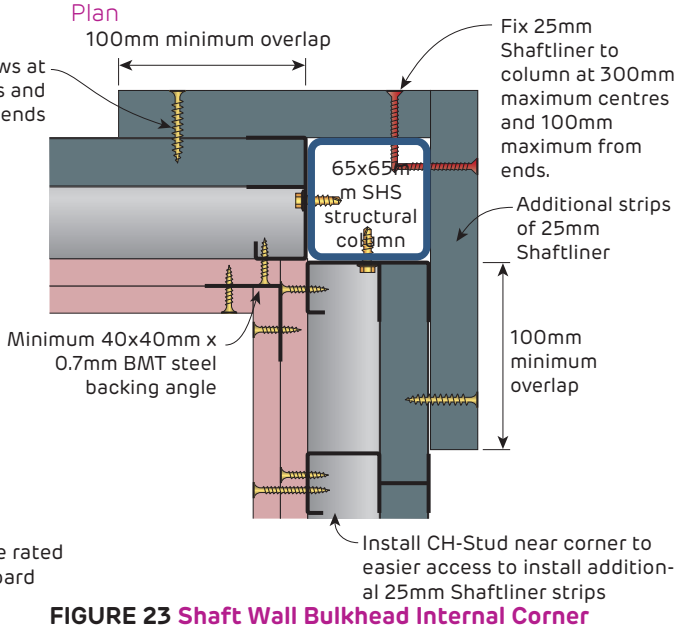

FIGURE 23 Shaft Wall Bulkhead Internal Corner using SHS Column with 64mm CH-Studs
SHW2
Plan

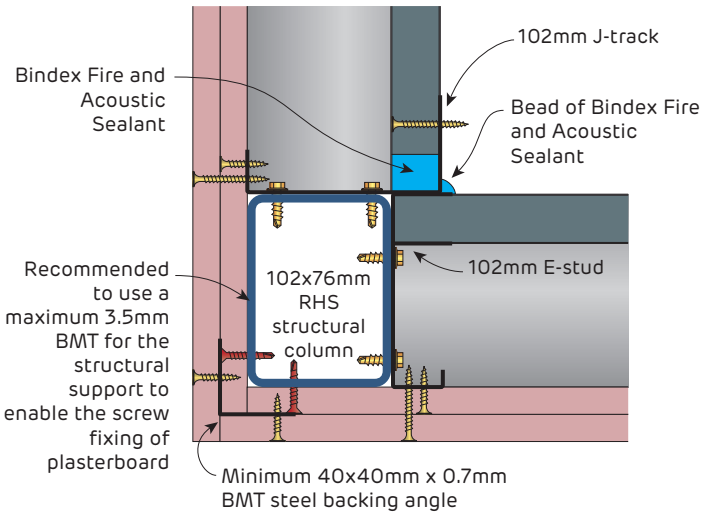

FIGURE 24 Shaft Wall Bulkhead External Corner using RHS Column with 102mm CH-Studs
SHW2
Plan

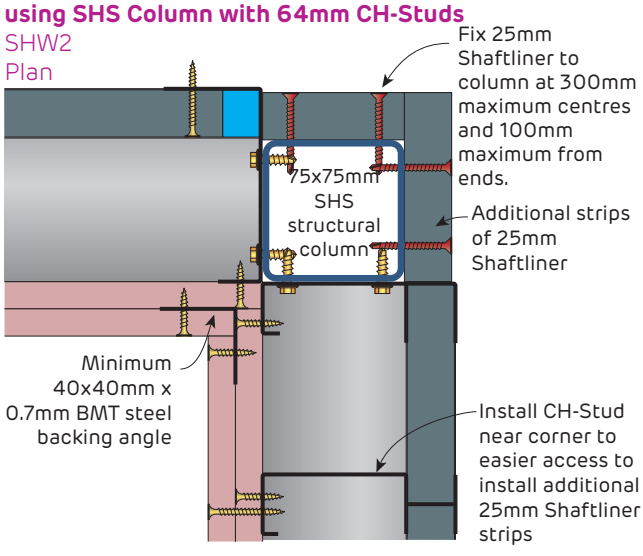

FIGURE 25 Shaft Wall Bulkhead Internal Corner using SHS Column with 102mm CH-Studs
SHW2
Plan

Fire Rated

Shaft Wall Ceilings and Bulkhead using Structural Columns and Beams

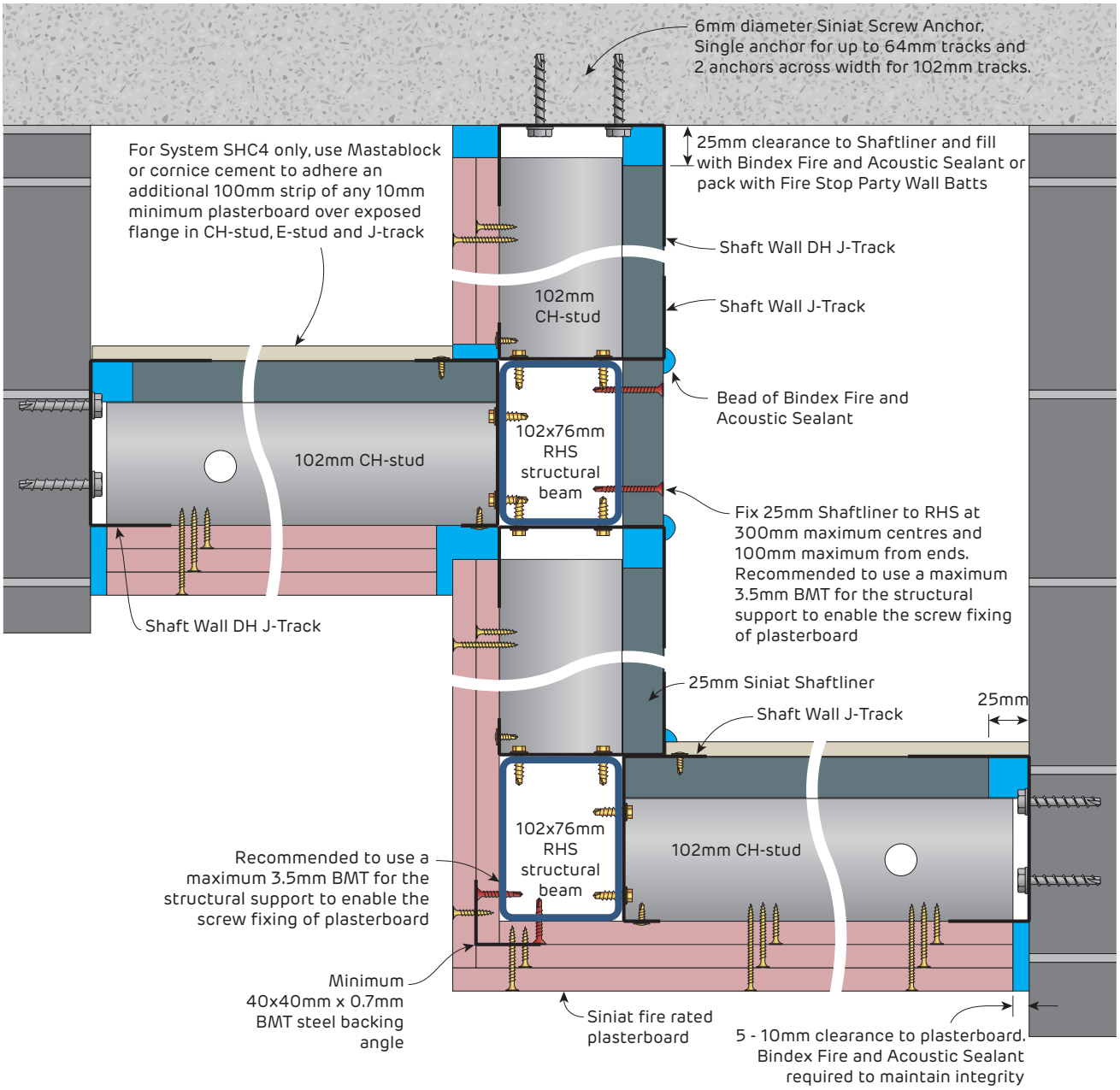

FIGURE 26 Shaft Wall Ceilings and Bulkhead using RHS Structural Columns and Beams
SHW2 and SHC4
Section

Fire Rated
Shaft Wall Ceiling and Bulkhead using Structural Beams

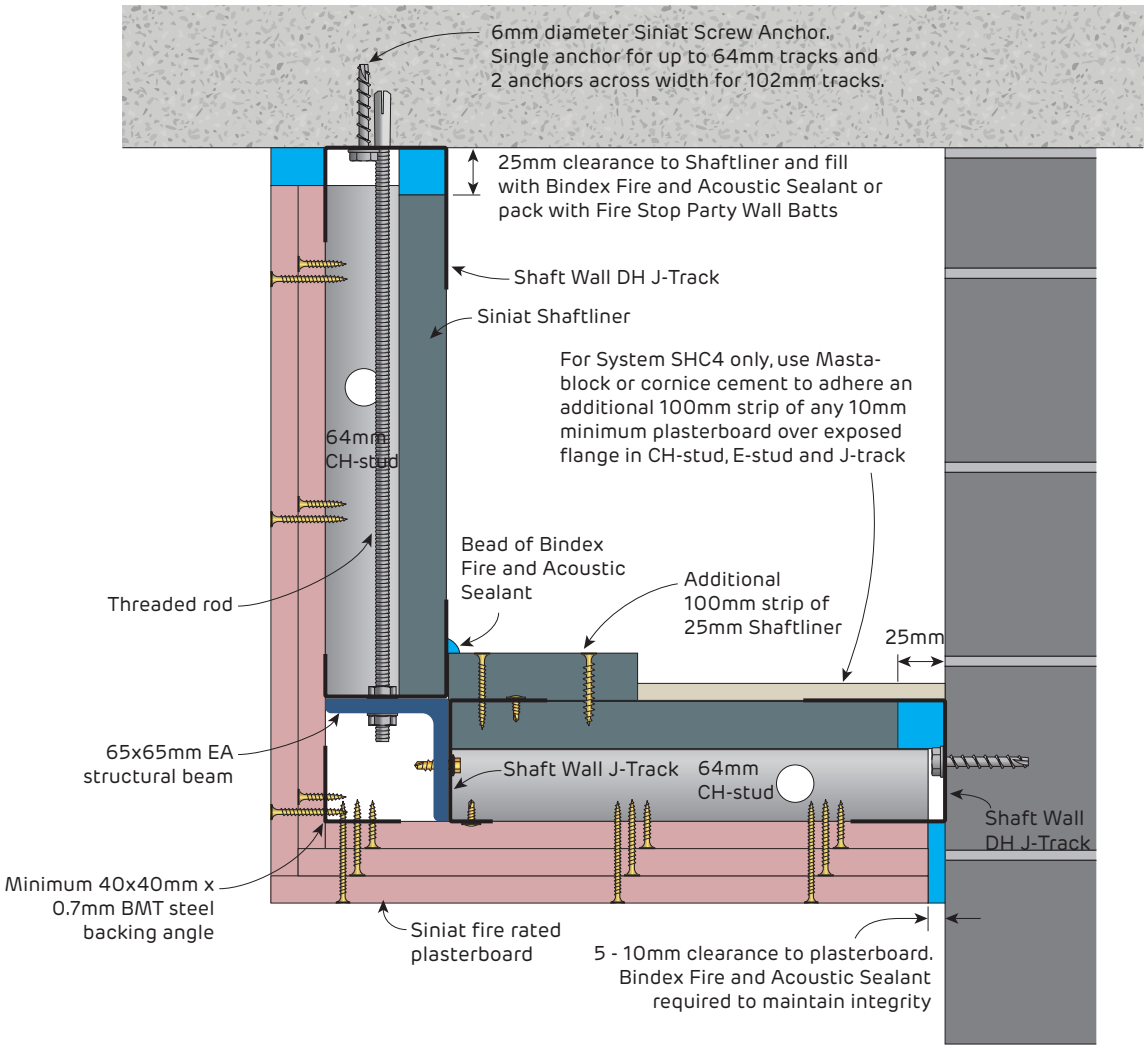

FIGURE 27 Shaft Wall Ceiling and Bulkhead with EA Structural Beam
SHW2 and SHC4
Section

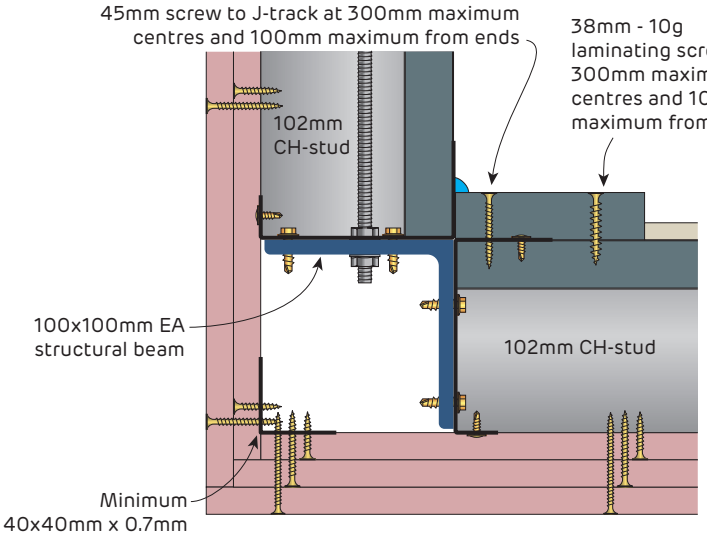

FIGURE 28 Detail using EA Beam with 102mm CH-Studs
SHW2 and SHWC4
Section

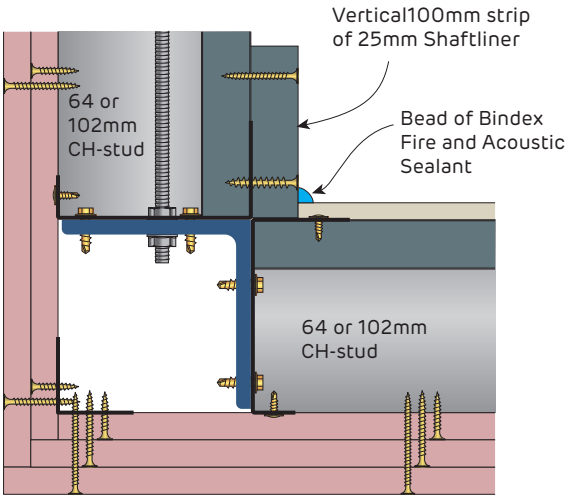

FIGURE 29 Alternative Detail using EA Beam with 64mm or 102mm CH-Studs
SHW2 and SHC4
Section



INSTALLATION	**608**
FRAMING	608
STEEL PROFILE INFORMATION	611
CONSTRUCTION DETAILS	**612**

5.5 Top Hat Ceilings

Top Hats are an effective means of providing structural framing behind various ceiling linings. Siniat Top Hats are durable and come with industry leading Zincalume AM150 corrosion protection.

Top Hats are typically installed under purlins or concrete slabs for various ceiling linings when high wind pressures or large spans are required.

Framing

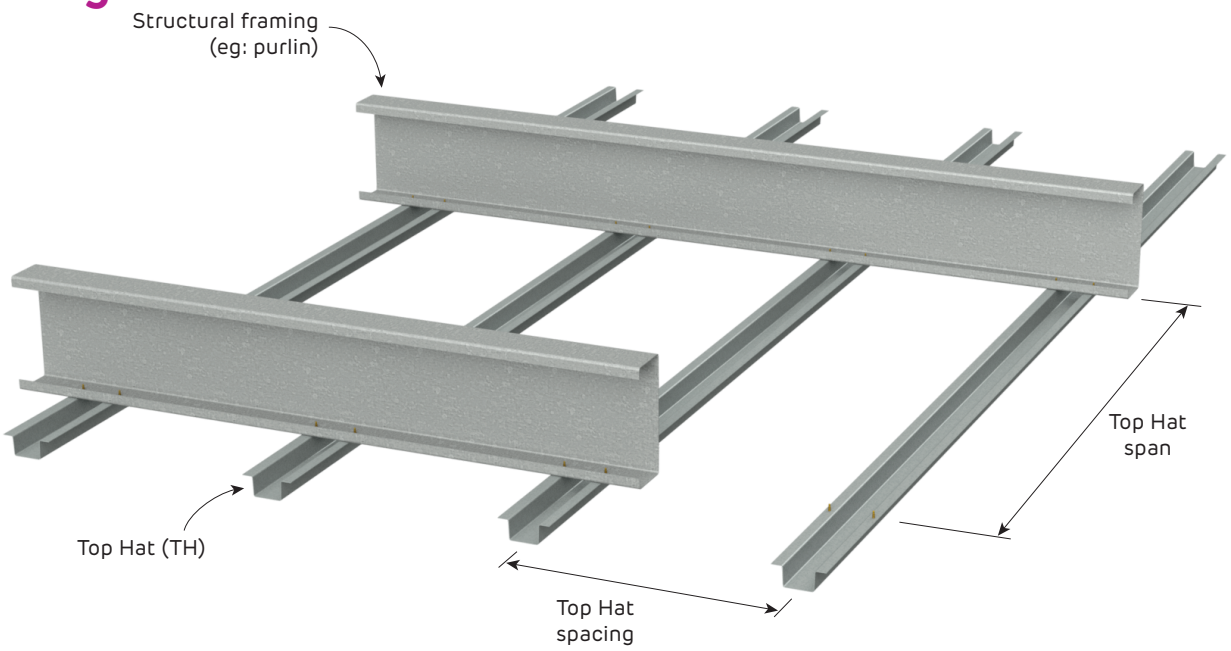

FIGURE 1 Top Hat Span and Spacing

Table 1 Ceiling 50x15x1.15 Top Hat Span Table (mm)

	Span type	Top Hat spacing (mm)	Ultimate Wind Pressure W_u (kPa)								
			1.0	1.5	2.0	2.5	3.0	3.5	4.0	5.0	6.0
Serviceability deflection Span / 360	Single span	600	700	630	580	540	510	490	470	440	410
		450	770	690	640	600	570	540	520	480	460
		400	800	720	660	620	590	560	540	500	470
		300	880	790	730	690	650	620	590	550	520
	2 or more spans	600	870	780	720	670	640	610	580	540	460*
		450	950	860	790	740	700	670	640	600	570
		400	990	890	820	770	730	700	670	620	590
		300	1090	980	910	850	800	770	740	690	650

Table 2 Ceiling 50x25x1.15 Top Hat Span Table (mm)

	Span type	Top Hat spacing (mm)	Ultimate Wind Pressure W_u (kPa)								
			1.0	1.5	2.0	2.5	3.0	3.5	4.0	5.0	6.0
Serviceability deflection Span / 360	Single span	600	1100	980	910	850	810	770	740	690	650
		450	1210	1080	1000	940	890	850	810	760	720
		400	1250	1130	1040	980	920	880	850	790	750
		300	1380	1240	1150	1070	1020	970	930	870	820
	2 or more spans	600	1360	1220	1130	1050	890*	770*	680*	550*	460*
		450	1490	1340	1240	1160	1100	1030*	910*	740*	620*
		400	1550	1400	1290	1210	1140	1090	1030*	830*	700*
		300	1710	1540	1420	1330	1260	1200	1150	1080	930*

*Limited by 2x10g Hex-head screw connection capacity.

Table 3 Ceiling 50x35x1.15 or 75x35x1.15 or 120x35x1.15 Top Hat Span Table (mm)

	Span type	Top Hat spacing (mm)	Ultimate Wind Pressure W_u (kPa)						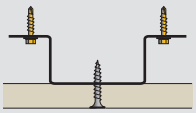		
			1.0	1.5	2.0	2.5	3.0	3.5	4.0	5.0	6.0
Serviceability deflection Span / 360	Single span	600	1400	1260	1160	1090	1030	980	940	880	830
		450	1540	1380	1280	1200	1130	1080	1040	970	910
		400	1600	1440	1330	1240	1180	1120	1080	1010	950
		300	1760	1580	1460	1370	1300	1240	1190	1110	1050
	2 or more spans	600	1730	1560	1290*	1060*	890*	770*	680*	550*	460*
		450	1900	1710	1580	1410*	1190*	1030*	910*	740*	620*
		400	1980	1780	1640	1540	1340*	1160*	1030*	830*	700*
		300	2180	1960	1810	1700	1610	1530	1370*	1110*	930*

Table 4 Ceiling 50x50x1.15 Top Hat Span Table (mm)

	Span type	Top Hat spacing (mm)	Ultimate Wind Pressure W_u (kPa)						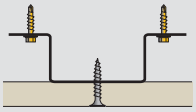		
			1.0	1.5	2.0	2.5	3.0	3.5	4.0	5.0	6.0
Serviceability deflection Span / 360	Single span	600	1890	1700	1570	1470	1390	1330	1280	1190	1120
		450	2080	1870	1730	1620	1530	1460	1400	1310	1240
		400	2160	1950	1800	1680	1590	1520	1460	1360	1290
		300	2380	2140	1980	1850	1760	1680	1610	1500	1420
	2 or more spans	600	2320*	1660*	1290*	1060*	890*	770*	680*	550*	460*
		450	2570	2210*	1720*	1410*	1190*	1030*	910*	740*	620*
		400	2680	2410	1940*	1590*	1340*	1160*	1030*	830*	700*
		300	2950	2650	2450	2120*	1790*	1550*	1370*	1110*	930*

Table 5 Ceiling 50x15x0.75 Top Hat Span Table (mm)

	Span type	Top Hat spacing (mm)	Ultimate Wind Pressure W_u (kPa)						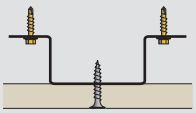		
			1.0	1.5	2.0	2.5	3.0	3.5	4.0	5.0	6.0
Serviceability deflection Span / 360	Single span	600	610	540	500	470	450	420	410	380	360
		450	670	600	550	520	490	470	450	420	400
		400	690	620	580	540	510	490	470	440	410
		300	760	690	630	590	560	540	510	480	450
	2 or more spans	600	750	670	620	580	550	510	480	430	390
		450	830	740	680	640	610	580	560	490	450
		400	860	770	710	670	630	600	580	520	480
		300	950	850	780	740	700	660	640	590	550

*Limited by 2x10g Hex-head screw connection capacity.

1. Check maximum cladding span and fastener spacing requirements from the manufacturers literature. Maximum cladding weight 22 kg/m^2.
2. Tables based upon downward (suction) and upward (uplift) pressures.
3. Tables refer to Siniat Top Hats of grade G300 steel with Zincalume™ AM150 corrosion protection.
4. All Top Hats must be supported 150mm maximum from ends.
5. Calculations based upon either single span or 2-or-more spans, designed in accordance with *AS/NZS 4600:2018 Cold Formed Steel Structures*.
6. Wind pressures determined in accordance with *AS/NZS 1170.2 Wind Actions*.
7. Ultimate Load Case 1: 1.2G + Wu (suction), Ultimate Load Case 2: 0.9G + Wu (uplift)
8. Serviceability Load Case 1: G, with deflection limited to span/500, and Serviceability Load Case 2: G + Ws, with deflection limited to span/360. Serviceability pressure taken as 65% of ultimate wind pressure suitable for Region A and Region B.
9. Connections checked using 2 x 10g hex-head screws into minimum 1.0mm BMT G550 steel or minimum 1.5mm BMT G450 steel (purlins or girts). Contact Siniat if fixing to a different substrate for the possibility of spanning further.
10. Splicing of Top Hats is not permitted.
11. The nominated lateral pressures and deflection limits must be checked for suitability for a specific project.

Table 6 Ceiling 50x25x0.75 Top Hat Span Table (mm)

	Span type	Top Hat spacing (mm)	Ultimate Wind Pressure W_u (kPa)						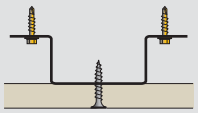		
			1.0	1.5	2.0	2.5	3.0	3.5	4.0	5.0	6.0
Serviceability deflection Span / 360	Single span	600	950	850	790	740	700	670	640	600	560
		450	1050	940	870	810	770	730	700	660	620
		400	1090	980	900	850	800	760	730	680	650
		300	1200	1080	990	930	880	840	810	750	710
	2 or more spans	600	1180	1060	980	900	830	770	680*	550*	460*
		450	1290	1160	1070	1010	950	890	840	740*	620*
		400	1350	1210	1120	1050	990	950	890	800	700*
		300	1480	1330	1230	1150	1090	1040	1000	920	840

Table 7 Ceiling 50x35x0.75 Top Hat Span Table (mm)

	Span type	Top Hat spacing (mm)	Ultimate Wind Pressure W_u (kPa)						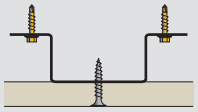		
			1.0	1.5	2.0	2.5	3.0	3.5	4.0	5.0	6.0
Serviceability deflection Span / 360	Single span	600	1220	1090	1010	950	900	860	820	770	700
		450	1340	1200	1110	1040	990	940	900	840	800
		400	1390	1250	1160	1080	1030	980	940	880	830
		300	1530	1380	1270	1190	1130	1080	1040	970	910
	2 or more spans	600	1510	1350	1190	1060*	890*	770*	680*	550*	460*
		450	1660	1490	1370	1240	1140	1030*	910*	740*	620*
		400	1730	1550	1430	1320	1210	1130	1030*	830*	700*
		300	1900	1710	1580	1480	1400	1300	1220	1100	930*

Table 8 Ceiling 50x50x0.75 Top Hat Span Table (mm)

	Span type	Top Hat spacing (mm)	Ultimate Wind Pressure W_u (kPa)						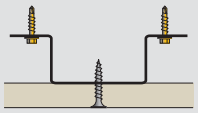		
			1.0	1.5	2.0	2.5	3.0	3.5	4.0	5.0	6.0
Serviceability deflection Span / 360	Single span	600	1640	1470	1360	1270	1210	1130	1060	950	870
		450	1800	1620	1500	1400	1330	1270	1220	1100	1010
		400	1880	1690	1560	1460	1380	1320	1270	1170	1070
		300	2070	1860	1710	1610	1520	1450	1390	1300	1230
	2 or more spans	600	2030	1660*	1290*	1060*	890*	770*	680*	550*	460*
		450	2230	2010	1720*	1410*	1190*	1030*	910*	740*	620*
		400	2320	2090	1920	1590*	1340*	1160*	1030*	830*	700*
		300	2560	2300	2120	1990	1790*	1550*	1370*	1110*	930*

*Limited by 2x10g Hex-head screw connection capacity.

1. Check maximum cladding span and fastener spacing requirements from the manufacturers literature. Maximum cladding weight 22 kg/m^2.
2. Tables based upon downward (suction) and upward (uplift) pressures.
3. Tables refer to Siniat Top Hats of grade G300 steel with Zincalume™ AM150 corrosion protection.
4. All Top Hats must be supported 150mm maximum from ends.
5. Calculations based upon either single span or 2-or-more spans, designed in accordance with *AS/NZS 4600:2018 Cold Formed Steel Structures*.
6. Wind pressures determined in accordance with *AS/NZS 1170.2 Wind Actions*.
7. Ultimate Load Case 1: 1.2G + Wu (suction), Ultimate Load Case 2: 0.9G + Wu (uplift)
8. Serviceability Load Case 1: G, with deflection limited to span/500, and Serviceability Load Case 2: G + Ws, with deflection limited to span/360. Serviceability pressure taken as 65% of ultimate wind pressure suitable for Region A and Region B.
9. Connections checked using 2 x 10g hex-head screws into minimum 1.0mm BMT G550 steel or minimum 1.5mm BMT G450 steel (purlins or girts). Contact Siniat if fixing to a different substrate for the possibility of spanning further.
10. Splicing of Top Hats is not permitted.
11. The nominated lateral pressures and deflection limits must be checked for suitability for a specific project.

Steel Profile Information

Material

Manufacturer	Grade	Ultimate	Yield	Coating
Siniat	G300	340 MPa	300 MPa	AM150

1. Steel grade and coating in accordance with AS 1397 *Continuous hot-dip metallic coated steel sheet and strip*

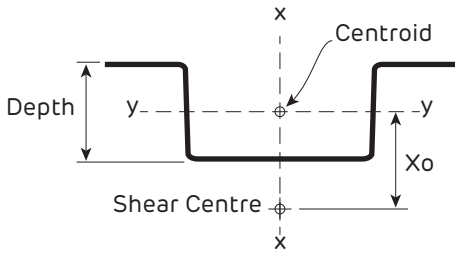

Top Hats

Section Properties

Profile	Dimensions (mm)		Shear Centre from Centroid (mm)	Area (mm^2)	Moment of Inertia (mm^4)		Section Modulus (mm^3)		Torsion Constant J (mm^4)	Warping Constant Iw (mm^6)
	Depth	BMT	Xo		Ixx	Iyy	Zxx	Zyy		
50x15x0.75	15	0.75	-11.2	75.4	41,268	2,781	1,028	334	14.1	517,040
50x25x0.75	25	0.75	-19.7	99.5	67,737	10,632	1,461	844	18.7	2,482,400
50x35x0.75	35	0.75	-29.6	111.5	69,125	22,319	1,594	1,193	20.9	5,708,900
50x50x0.75	50	0.75	-42.0	140.0	97,829	54,286	2,022	2,178	26.3	17,086,000
50x15x1.15	15	1.15	-11.2	115.5	63,281	4,267	1,568	513	50.9	791,440
50x25x1.15	25	1.15	-19.7	152.6	103,830	16,300	2,229	1,294	67.3	3,799,990
50x35x1.15	35	1.15	-29.0	171.0	108,950	33,724	2,444	1,846	75.4	8,407,000
50x50x1.15	50	1.15	-42.0	214.7	149,990	83,217	3,088	3,339	94.7	26,182,000
120x35x1.15	35	1.15	-24.5	265.3	782,880	48,559	8,889	2,114	116.9	90,681,000

Fire Rated and Non-Fire Rated
Top Hat Ceilings

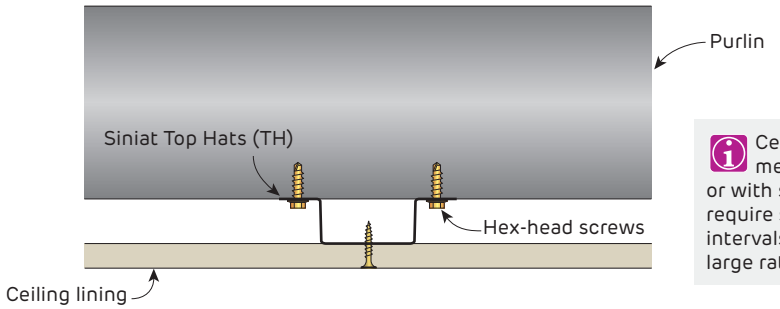

Ceilings in close proximity to metal roofs (ie: raked ceiling or with small ceiling cavities) require smaller control joint intervals as they are exposed to large rates of thermal expansion.

FIGURE 2 Internal or External Top Hat Ceiling under Purlins
Horizontal Top Hats under Purlins
Section

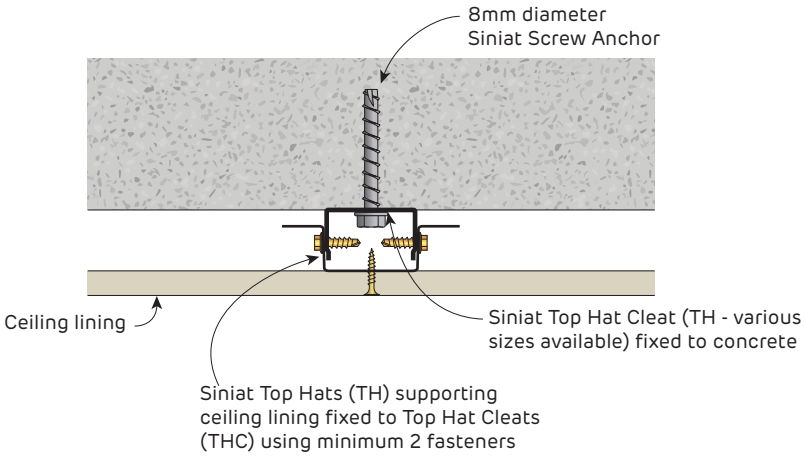

FIGURE 3 Internal or External Top Hat Ceiling under Concrete
Horizontal Top Hats over Top Hat Cleats
Section



6.1 Soil and Water Pipe Acoustic Systems

Soil and waste pipe systems provide sound insulation ratings for water services in a ceiling cavity, bulkhead or a duct. These systems have been designed to comply with National Construction Code (NCC) requirements.

The soil and water pipe systems cover a range of situations including where soil, waste or water supply pipes and ducts pass through ceilings, riser ducts or bulkheads in bathrooms, kitchens, bedrooms and lounge rooms. Certain systems may require the pipes to be lagged but alternative systems exist that include covering the pipes in plasterboard or the use of a double ceiling when wrapping is not practical.

This section includes only the system tables for soil and water pipe acoustic systems. For installation requirements, refer to the relevant wall or ceiling section.

BATHROOM TO WALL AND CEILING JUNCTION 1

- Pipe wrapped with 5 kg/m² mass barrier and foam
- Plasterboard lining as specified in tables

[Pipe wrapping must not be in contact with insulation, stud framing or plasterboard]

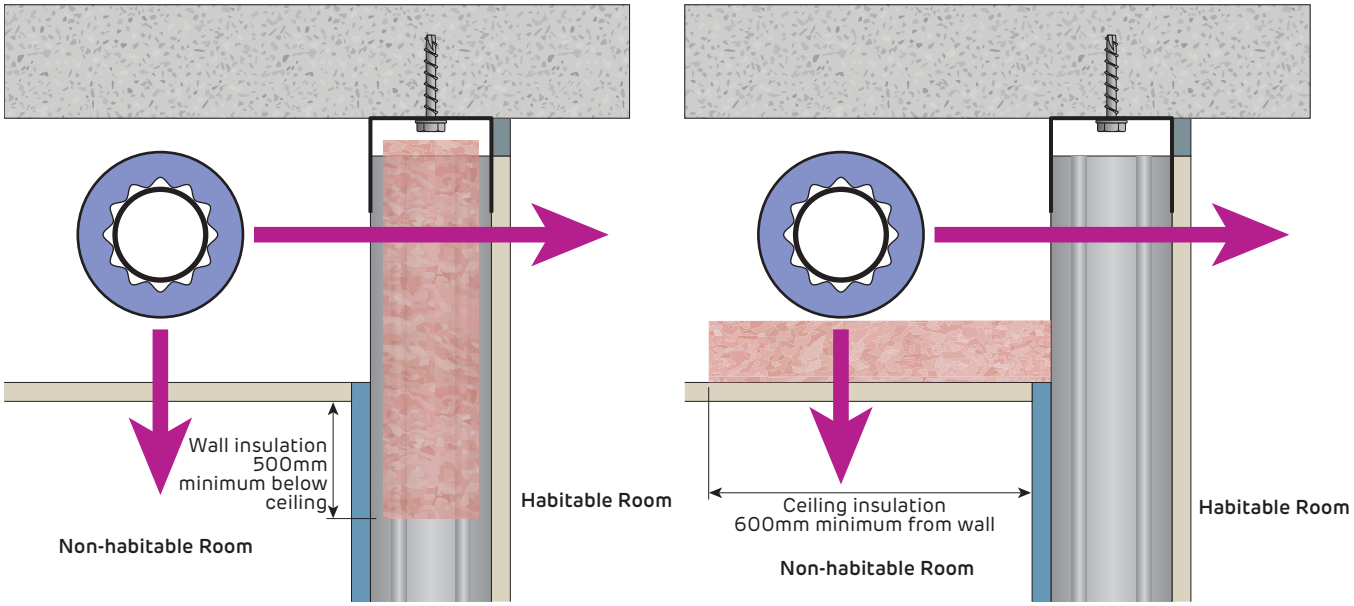

WALL TO HABITABLE ROOM			
System	**Habitable Room Wall Lining**	**Airborne Sound Insulation Rw (Rw + Ctr)**	
		Pink® Partition 50mm 11 kg/m³ R1.2 insulation in wall or along ceiling as shown above	Report Day Design 3094-35 3094-38
SWP22	1 layer of 13mm **masta**shield	48 (**40**)	
SWP32	1 layer of 13mm **water**shield	48 (**40**)	
SWP34	1 layer of 13mm **fire**shield	49 (**40**)	
SWP28	1 layer of 13mm **sound**shield	49 (**41**)	
SWP35	1 layer of 16mm **fire**shield	50 (**41**)	

CEILING TO NON-HABITABLE ROOM				
System	**Ceiling Lining**	**Airborne Sound Insulation Rw (Rw + Ctr)**		
		Pink® Partition 50mm 11 kg/m³ R1.2 insulation in wall or along ceiling as shown above	Pink® Partition 50mm 11 kg/m³ R1.2 insulation over entire ceiling	Report Day Design 3094-35 3094-38
SWP22	1 layer of 13mm **masta**shield	45 (35)	48 (**40**)	
SWP32	1 layer of 13mm **water**shield	45 (37)	48 (**40**)	
SWP34	1 layer of 13mm **fire**shield	46 (37)	49 (**40**)	
SWP28	1 layer of 13mm **sound**shield	46 (38)	49 (**41**) or 47 (**40**) with 1 non-acoustic rated downlight per 5m²	
SWP35	1 layer of 16mm **fire**shield	46 (38)	50 (**41**)	

BATHROOM TO WALL AND CEILING JUNCTION 2

- Pipe wrapped with 5 kg/m² mass barrier and foam
- Plasterboard lining as specified in tables

[Pipe wrapping must not be in contact with insulation, stud framing or plasterboard]

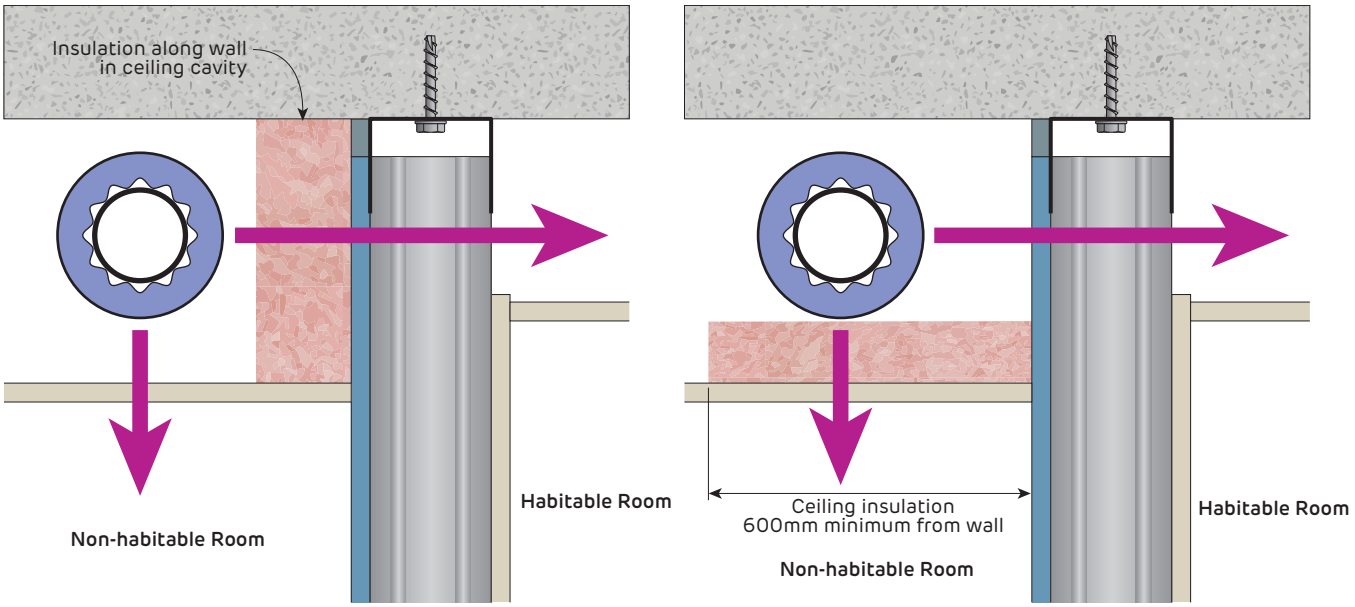

WALL TO HABITABLE ROOM			
System	**Habitable Room Wall Lining**	**Airborne Sound Insulation Rw (Rw + Ctr)**	
		Pink® Partition 50mm 11 kg/m³ R1.2 insulation in ceiling cavity as shown above	Report Day Design 3094-35 3094-38
SWP22	1 layer of 13mm **masta**shield	48 (**40**)	
SWP32	1 layer of 13mm **water**shield	48 (**40**)	

CEILING TO NON-HABITABLE ROOM				
System	**Ceiling Lining**	**Airborne Sound Insulation Rw (Rw + Ctr)**		
		Pink® Partition 50mm 11 kg/m³ R1.2 insulation in wall or along ceiling as shown above	Pink® Partition 50mm 11 kg/m³ R1.2 insulation over entire ceiling	Report Day Design 3094-35 3094-38
SWP22	1 layer of 13mm **masta**shield	45 (35)	48 (**40**)	
SWP32	1 layer of 13mm **water**shield	45 (37)	48 (**40**)	
SWP34	1 layer of 13mm **fire**shield	46 (37)	49 (**40**)	
SWP28	1 layer of 13mm **sound**shield	46 (38)	49 (**41**) or 47 (**40**) with 1 non-acoustic rated downlight per 5m²	

BATHROOM TO WALL AND CEILING JUNCTION 3

- Plasterboard lining as specified in tables

[Pipe wrapping must not be in contact with insulation, stud framing or plasterboard]

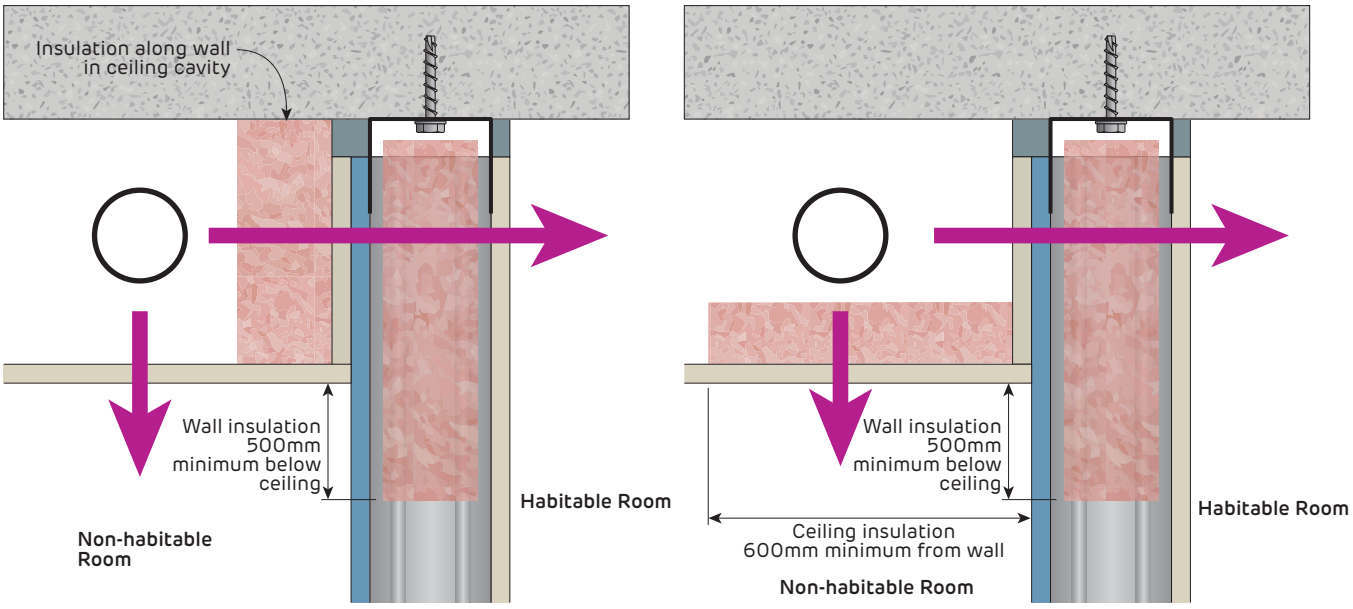

WALL TO HABITABLE ROOM						
System	**Additional Plasterboard Strip Along Wall in Ceiling Cavity**	**Non-Habitable Room Wall Lining**	**Habitable Room Wall Lining**	**Airborne Sound Insulation Rw (Rw + Ctr)**		
				Pink® Partition 50mm 11 kg/m³ R1.2 insulation in wall and ceiling as shown above		Report
				64mm stud	92mm stud	
SWP111	2 layers of 10mm **water**shield	10mm **water**shield	10mm **masta**shield	50 (**40**)	-	Day Design 5008-1 5008-23
SWP108	1 layer of 13mm **sound**shield	10mm **water**shield	10mm **masta**shield	49 (39)	(**40**)	
SWP114	1 layer of 13mm **fire**shield	10mm **water**shield	10mm **masta**shield	48 (38)	(**40**)	
SWP210	1 layer of 16mm **fire**shield	10mm **water**shield	13mm **masta**shield	50 (**40**)	-	
SWP212	1 layer of 16mm **fire**shield	13mm **water**shield	10mm **masta**shield	50 (**40**)	-	

CEILING TO NON-HABITABLE ROOM				
System	**Ceiling Lining**	**Airborne Sound Insulation Rw (Rw + Ctr)**		
		Pink® Partition 50mm 11 kg/m³ R1.2 insulation in ceiling cavity as shown above	Pink® Partition 50mm 11 kg/m³ R1.2 insulation over entire ceiling	Report
SWP3	1 layer of 13mm **masta**shield	29 (25)	32 (28) or 26 (25) with 3 non-acoustic rated downlight per 5m²	Day Design 3094-35
SWP13	1 layer of 13mm **water**shield	29 (26)	32 (29) or 26 (26) with 3 non-acoustic rated downlight per 5m²	
SWP15	1 layer of 13mm **fire**shield	30 (26)	33 (29) or 25 (25) with 4 non-acoustic rated downlight per 5m²	
SWP9	1 layer of 13mm **sound**shield	30 (27)	33 (30) or 25 (25) with 4 non-acoustic rated downlight per 5m²	

SWP2-SWP15

- Plasterboard wall, ceiling, bulkhead or duct lining as specified in the table

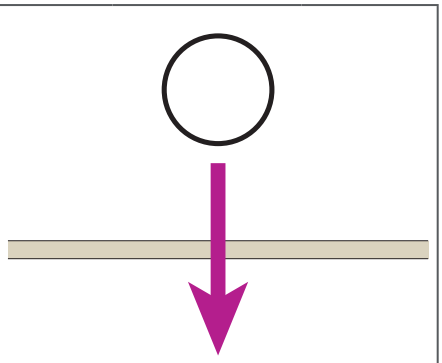

[Number of non-acoustic rated downlights for every 5m² area]
[Downlights should be evenly distributed and no closer than 900mm apart]

System	Plasterboard Wall, Ceiling or Duct Lining	Airborne Sound Insulation Rw (Rw + Ctr)				
		No insulation		Pink® Partition 50mm 11 kg/m³ R1.2		
SWP2	2 layer of 10mm **masta**shield	32 (27)	28 (25) with 2 downlights	35 (30)	27 (26) with 4 downlights	Report Day Design 3094-35 Pipes must not be in contact with insulation or plasterboard
SWP3	1 layer of 13mm **masta**shield	29 (25)	-	32 (28)	26 (25) with 3 downlights	
SWP5	1 layer of 10mm **span**shield	28 (24)	-	31 (27)	27 (25) with 2 downlights	
SWP6	2 layers of 10mm **span**shield	32 (28)	26 (25) with 3 downlights	35 (31)	27 (27) with 4 downlights	
SWP8	2 layers of 10mm **sound**shield or **opal**	33 (30)	25 (25) with 4 downlights	36 (33)	28 (28) with 4 downlights	
SWP9	1 layer of 13mm **sound**shield	30 (27)	26 (25) with 2 downlights	33 (30)	25 (25) with 4 downlights	
SWP12	2 layers of 10mm **water**shield	32 (28)	26 (25) with 3 downlights	35 (31)	27 (27) with 4 downlights	
SWP13	1 layer of 13mm **water**shield	29 (26)	27 (25) with 1 downlight	32 (29)	26 (26) with 3 downlight	
SWP15	1 layer of 13mm **fire**shield	30 (26)	28 (25) with 1 downlight	33 (29)	25 (25) with 4 downlight	

SWP20-SWP35

- Pipe wrapped with 5 kg/m² mass barrier and foam
- Plasterboard wall, ceiling, bulkhead or duct lining as specified in the table

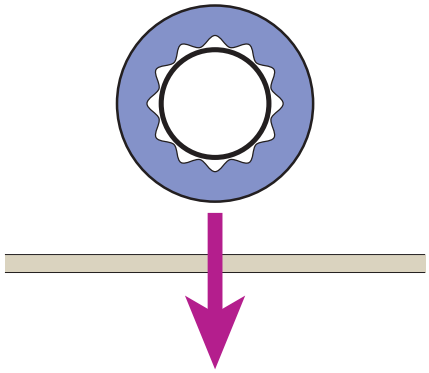

[Number of non-acoustic rated downlights for every 5m² area]
[Downlights should be evenly distributed and no closer than 900mm apart]

System	Plasterboard Wall, Ceiling or Duct Lining	Airborne Sound Insulation Rw (Rw + Ctr)			
		No insulation	Pink® Partition 50mm 11 kg/m³ R1.2		
SWP21	2 layers of 10mm **masta**shield	48 (38)	51 (**41**)	49 (**40**) with 1 downlight	Report Day Design 3094-35 3094-38
SWP22	1 layer of 13mm **masta**shield	45 (35)	48 (**40**)	-	
SWP25	2 layers of 10mm **span**shield	48 (39)	51 (**42**)	47 (**40**) with 2 downlights	
SWP28	1 layer of 13mm **sound**shield	46 (38)	49 (**41**)	47 (**40**) with 1 downlight	
SWP31	2 layers of 10mm **water**shield	48 (39)	51 (**42**)	47 (**40**) with 2 downlights	
SWP32	1 layer of 13mm **water**shield	45 (37)	48 (**40**)	-	
SWP34	1 layer of 13mm **fire**shield	46 (37)	49 (**40**)	-	
SWP35	1 layer of 16mm **fire**shield	46 (38)	50 (**41**)	-	

SWP143-SWP151

- Upper lining of 2 layer of 10mm **span**shield attached to a suspended or direct fix ceiling frame
- Minimum gap as specified in table
- Minimum 64mm steel studs used as ceiling joists (Refer to Section 5.3)
- Pink® Partition 50mm 11 kg/m³ R1.2 insulation in both ceiling cavities

[Number of non-acoustic rated downlights for every 5m² area]
[Downlights should be evenly distributed and no closer than 900mm apart]

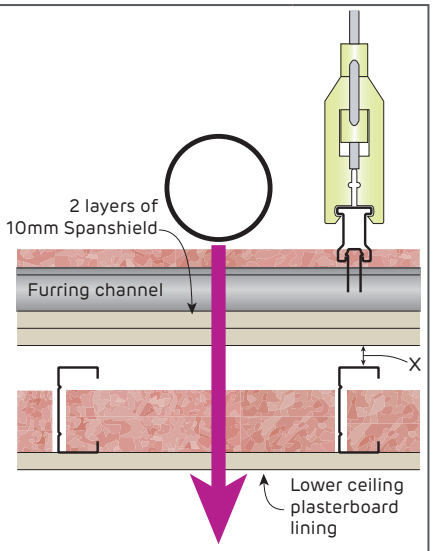

System	Lower Ceiling Plasterboard Lining	Airborne Sound Insulation Rw (Rw + Ctr)		
		X = 0mm	X = 10mm minimum	Report
SWP143	2 layer of 13mm **masta**shield	54 (**41**) with 4 downlights	55 (**42**) with 4 downlights	Day Design 5008-1
SWP145	2 layers of 10mm **span**shield	54 (**40**)	55 (**40**) with 4 downlights	Pipes must not be in contact with insulation or plasterboard
SWP148	1 layer of 13mm **sound**shield	51 (39)	54 (**40**)	
SWP151	2 layers of 10mm **water**shield	54 (**40**)	55 (**40**) with 4 downlights	

SWP163-SWP174

- Inner Duct Lining around pipe as specified in table
- Pink® Partition 50mm 11 kg/m³ R1.2 insulation in both cavities
- Outer plasterboard wall, ceiling, bulkhead or duct lining as specified in table

[Soil and water pipe systems can be a wall, ceiling, bulkhead or duct]
[Number of non-acoustic rated downlights for every 5m² area]
[Insulation to 1200mm minimum on both sides of pipe]
[Downlights should be evenly distributed and no closer than 900mm apart]

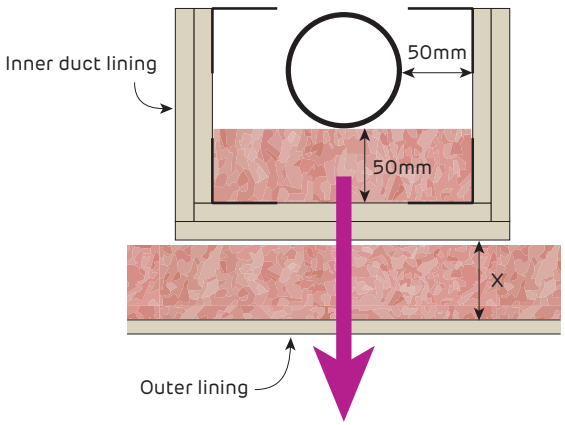

System	Inner Duct Lining	Outer Plasterboard Lining	Airborne Sound Insulation Rw (Rw + Ctr)	
			X = 100mm	Report
SWP163	1 layer of 13mm **masta**shield	2 layers of 13mm **masta**shield	54 (**41**) with 4 downlights	Day Design 5008-1
SWP165	1 layer of 13mm **masta**shield	2 layers of 10mm **span**shield	54 (**40**)	
SWP168	1 layer of 13mm **sound**shield, **water**shield or **fire**shield	1 layer of 13mm **sound**shield	53 (**40**)	Pipes must not be in contact with insulation or plasterboard
SWP174	1 layer of 13mm **sound**shield, **water**shield or **fire**shield	1 layer of 13mm **fire**shield	51 (**40**)	

SWP83-SWP95

- Inner duct lining of 2 layers of 13mm **soundshield**, **watershield** or **fireshield**
- Insulation as specified in table
- Outer plasterboard wall, ceiling, bulkhead or duct lining as specified in table

[Soil and water pipe systems can be a wall, ceiling, bulkhead or duct]
[Number of non-acoustic rated downlights for every 5m² area]
[Insulation to 1200mm minimum on both sides of pipe]
[Downlights should be evenly distributed and no closer than 900mm apart]

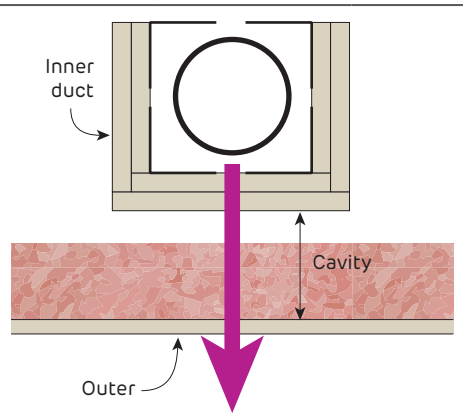

System	Outer Plasterboard Lining	Minimum Cavity (mm)	Airborne Sound Insulation Rw (Rw + Ctr)		
			With Pink® Partition 50mm 11 kg/m³ R1.2		
SWP82	2 layers of 13mm **masta**shield	75	55 (**43**)	49 (**40**) with 3 downlights	Report Day Design 3094-35 5008-1 Pipes must not be in contact with plasterboard
SWP85	2 layers of 10mm **span**shield	75	53 (**42**)	49 (**40**) with 2 downlights	
SWP88	1 layer of 13mm **sound**shield	75	52 (**40**)	-	
SWP88	1 layer of 13mm **sound**shield	100	55 (**45**)	53 (**43**) with 4 downlights	
SWP91	1 layer of 10mm **water**shield	100	51 (**40**)	49 (**40**) with 1 downlights	
SWP95	1 layer of 13mm **fire**shield	100	52 (**41**)	50 (**40**) with 4 downlights	

SWP182-SWP194

- Inner duct lining of 3 layers of 13mm **fire**shield
- Minimum 51mm steel stud framing
- Insulation as specified in table
- Outer plasterboard wall, ceiling or duct lining as specified in table

[Soil and water pipe systems can be a wall, ceiling, bulkhead or duct]
[Number of non-acoustic rated downlights for every 5m² area]
[Downlights should be evenly distributed and no closer than 900mm apart]

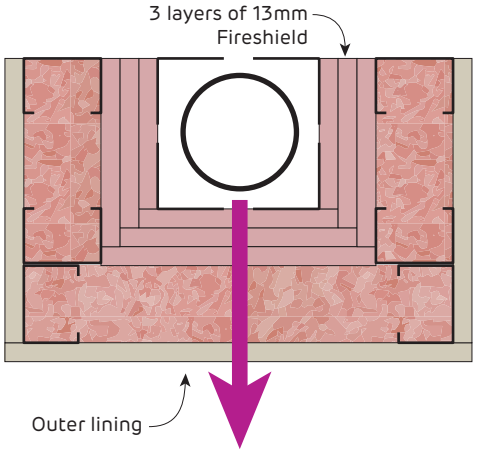

System	Outer Plasterboard Lining	Airborne Sound Insulation Rw (Rw + Ctr)		
		With Pink® Partition 50mm 11 kg/m³ R1.2		
SWP182	1 layer of 13mm **masta**shield	49 (**40**)	47 (39) with 4 downlights	Report Day Design 5008-1 Pipes must not be in contact with plasterboard
SWP194	1 layer of 13mm **fire**shield	50 (**41**)	48 (**40**) with 4 downlights	



SYSTEMS	**621**
INSTALLATION	**621**
GENERAL REQUIREMENTS	621
FRAMING	621
PLASTERBOARD LAYOUT	622
PLASTERBOARD FIXING	622
CONSTRUCTION DETAILS	**624**

6.2 Laminated Vertical Shaft

The laminated vertical shaft system consists of fire rated plasterboard laminated together to form enclosures for building services. They are designed to provide fire and acoustic isolation for electrical, plumbing and air-handling services. They are not suitable to operate as an air supply duct while exposed to an external fire or contain products of combustion, ie: smoke exhaust.

The laminated vertical shaft systems are constructed from three layers of either 13mm or 16mm **fire**shield and metal angle framing.

Laminated vertical shaft systems are suitable for use with fire rated penetrations including access panels, fire dampers, pipes and cables.

Laminated vertical shafts can form one up to four sides of a fire rated enclosure. They can be easily joined to other plasterboard, masonry or concrete walls with an equivalent or higher fire rating.

Laminated vertical shaft systems are non-load bearing and must not support roof, ceiling or floor loads.

For acoustic upgrades, refer to Section 6.1.

LVS1 - LVS2

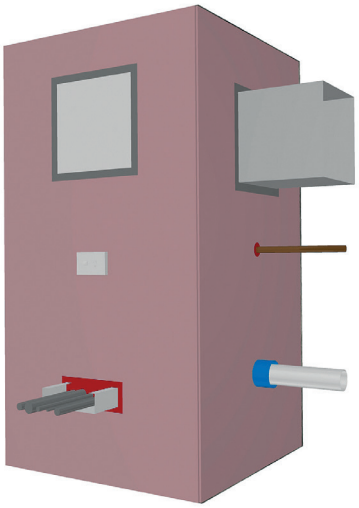

- 50 x 50mm x 0.7mm BMT Steel Backing Angle framing
- 3 layers of 13mm or 16mm **fire**shield laminated together

fireshield can be substituted with **multi**shield
Laminated Riser Duct can be 1, 2, 3 or 4 sided

FRL Fire Report FAR1660	System	Plasterboard Lining	Plasterboard Thickness (mm)	Sound Insulation Rw (Rw + Ctr)	
- / 90 /90 rated from both sides	LVS1	3 layers of 13mm **fire**shield	39	37 (34)	Report Day Design 3094-33
- / 120 /120 rated from both sides	LVS2	3 layers of 16mm **fire**shield	48	38 (35)	

General Requirements

	Fire Rated
Only joint the face layer. As a minimum to achieve the FRL, only use paper tape and two coats of masta**base** or masta**longset**.	✓
Use approved fire rated penetration details. Fire penetrations may require fire collars or other devices to maintain fire performance.	✓
Use **bindex** fire and acoustic sealant on all gaps and around perimeter.	✓

For acceptable modifications or variations to fire rated systems, refer to Section 2.3 Fire Resistance

Framing

Combined Fire and Structural Limited Wall Heights

Maximum Duct Width (m)	Maximum Duct Height (m)
3.5	2.4
3.18	2.7
3.0	3.0
2.4	3.6
2.16	4.2
1.8	4.8
1.2	5.4

1. Dimensions apply to both LVS1 and LVS2
2. Serviceability Limit State load 0.35 kPa.

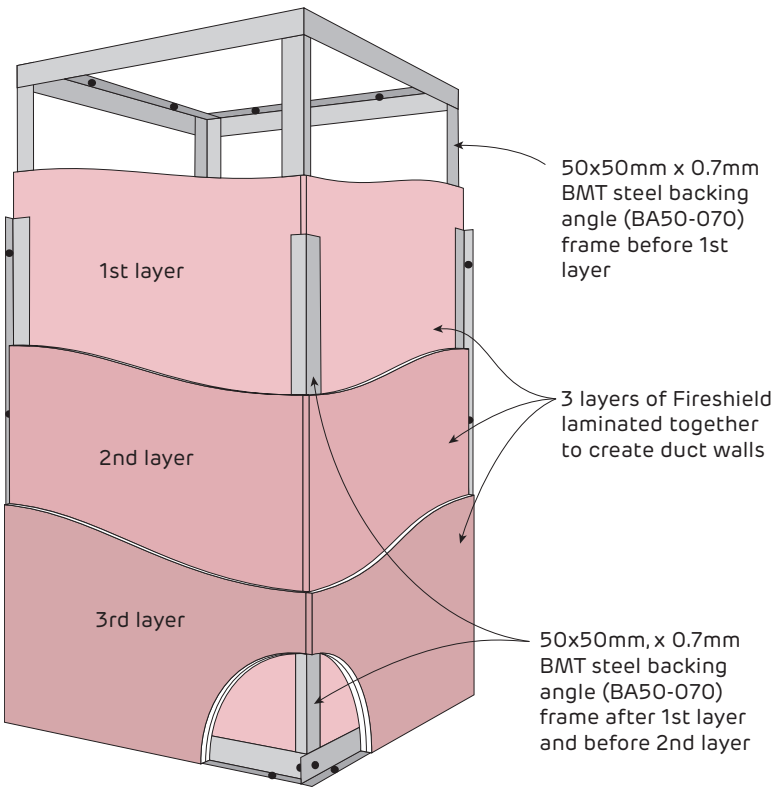

FIGURE 1 Framing and Plasterboard Layout

Plasterboard Layout

Vertical Layout	Fire Rated
Stagger butt joints by 600mm minimum on adjoining sheets and between layers.	✓
First layer butt joints must be backed by 50x50mm x 0.7mm BMT steel backing angle	✓
Stagger recessed edges by 300mm minimum between layers.	✓

Minimise butt joints by using long sheets.

Plasterboard Fixing

	Fire Rated
Use the 'Screw Only Method' in tiled or fire rated areas. Stud adhesive is not permitted.	✓
Drive screws to just below the sheet surface, taking care not to break the paper linerboard. For over-driven screws, install another screw 20mm away. Leave or remove the over-driven screw and patch.	✓
Laminating screws are used in the field for the second and third layer.	✓

Screw Type and Minimum Size for the Installation of Plasterboard to Steel

Plasterboard Thickness	1st Layer	2nd Layer	3rd Layer
13mm	6g x 25mm screw	6g x 41mm screw *	7g x 57mm screw *
16mm	6g x 32mm screw	6g x 45mm screw *	8g x 65mm screw *

For steel ≤ 0.75mm BMT, use fine thread needle point screws.

For steel ≥ 0.75mm BMT, use fine thread drill point screws.

*10g x 38mm Laminating screws may be used as detailed in installation diagrams.

FIGURE 2 Fire Rated Laminated Vertical Duct - 1st Layer - Vertical

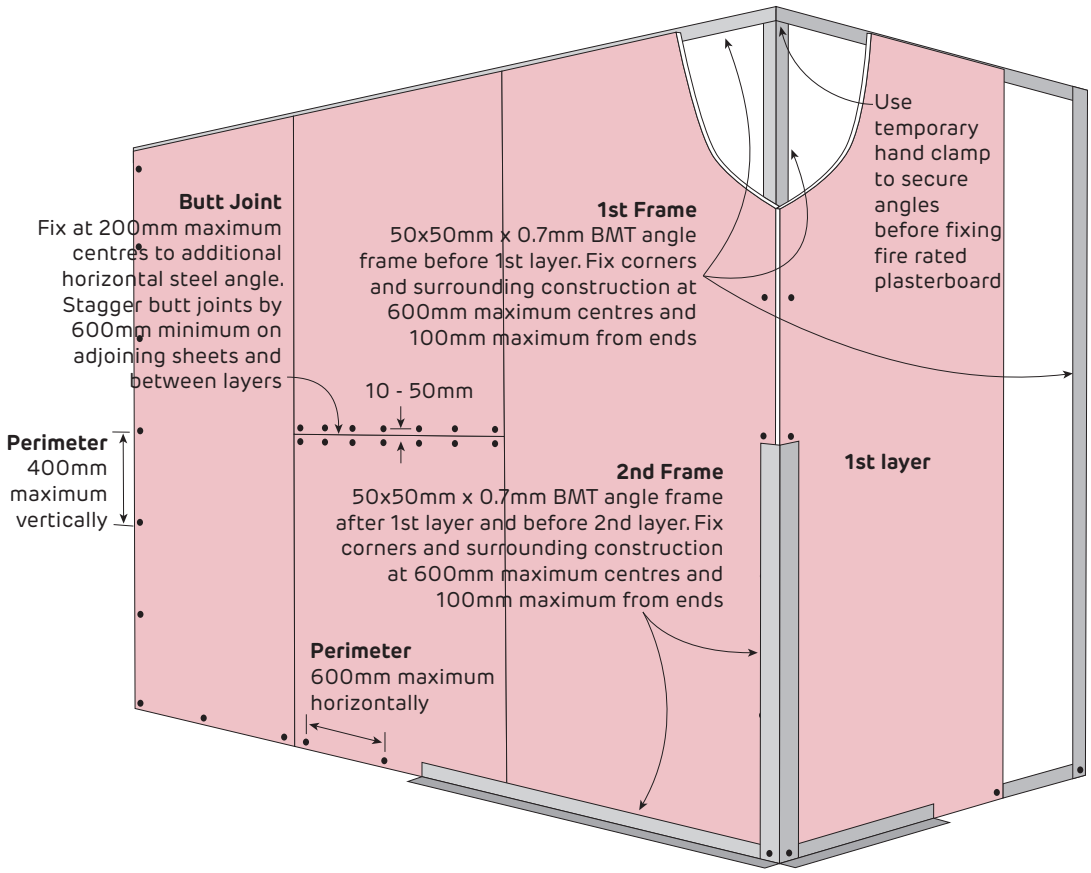

FIGURE 3 Fire Rated Laminated Vertical Duct - 2nd and 3rd Layers - Vertical + Vertical

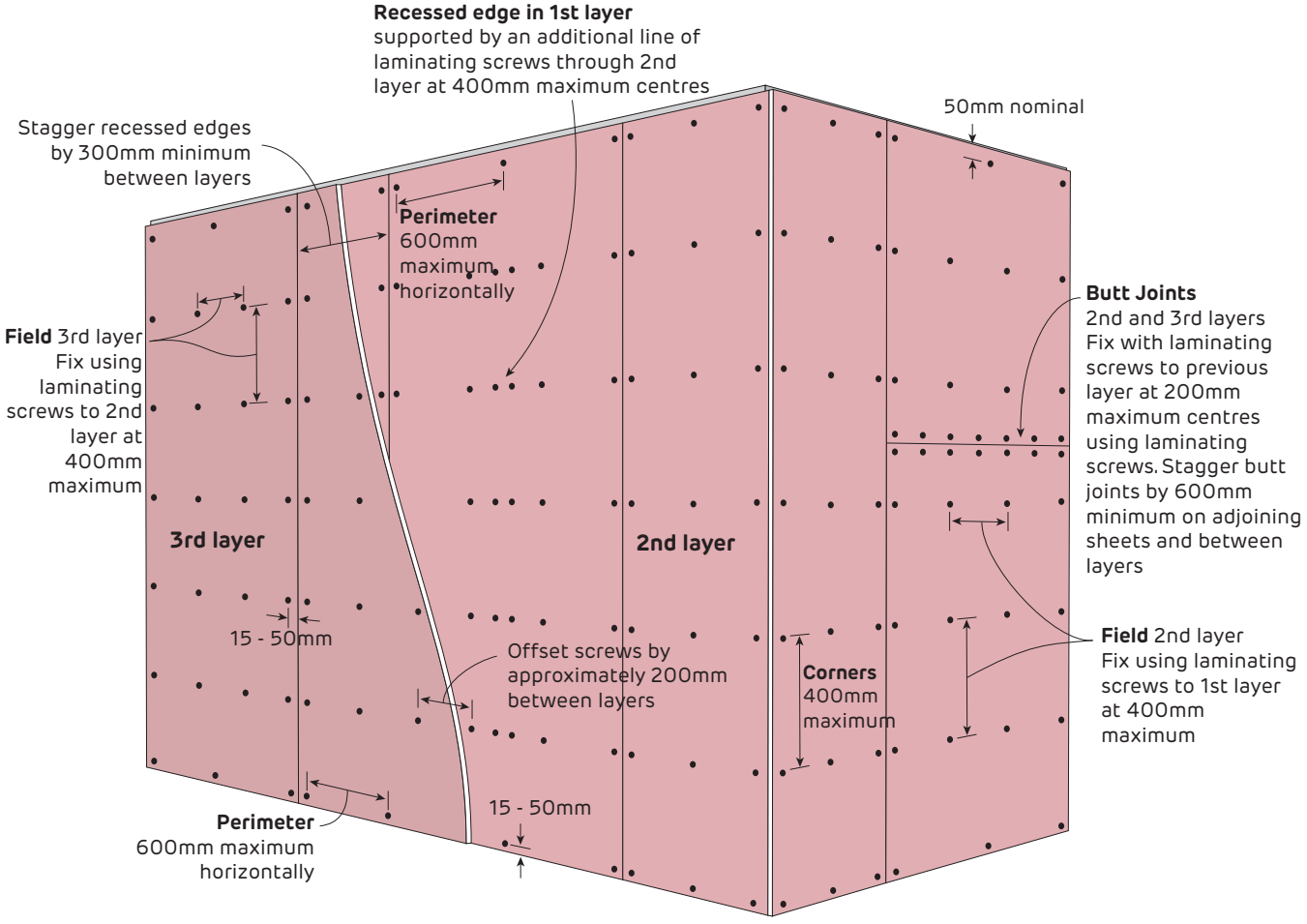

Jointing Only joint the face layer. As a minimum to achieve the FRL, only use paper tape and two coats of Mastabase or Mastalongset.

Fire Rated

Details for the Fire Rated Laminated Riser Duct

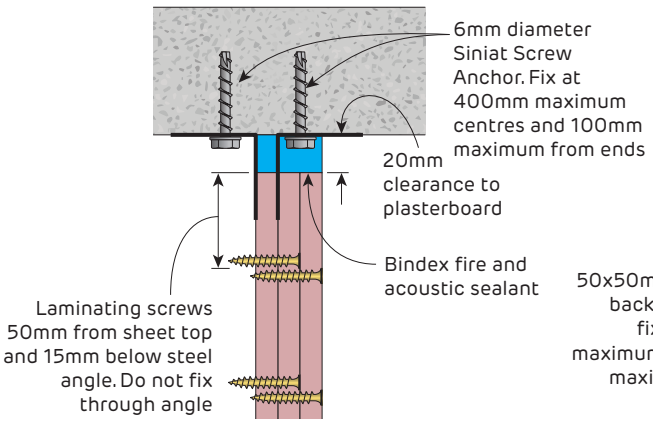

FIGURE 4 Laminated Duct Deflection Head to Slab
Elevation

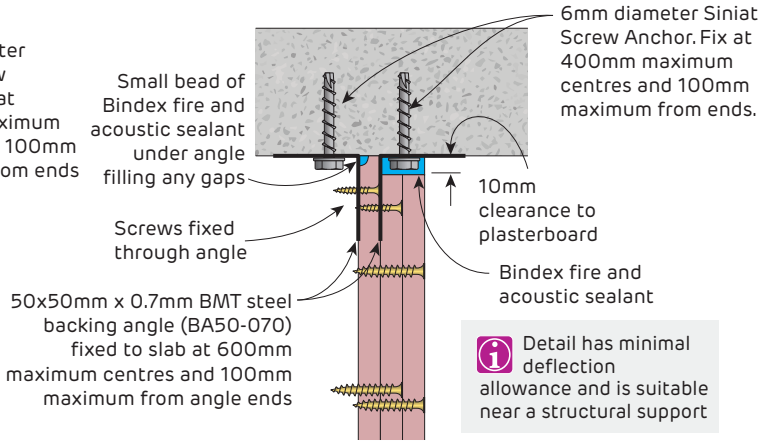

FIGURE 5 Laminated Duct Head to Slab near Structural Support
Elevation

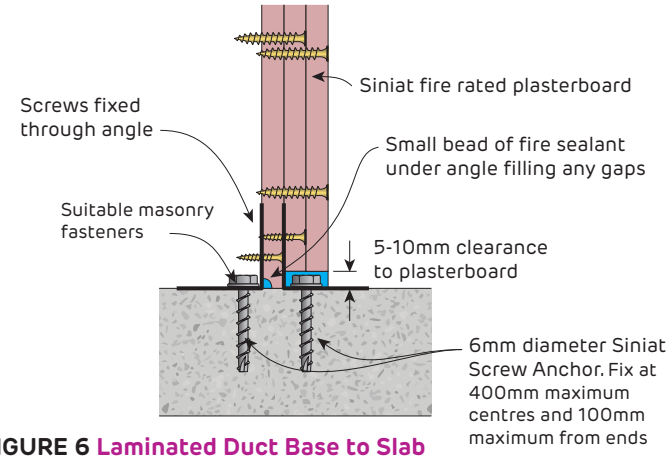

FIGURE 6 Laminated Duct Base to Slab
Elevation

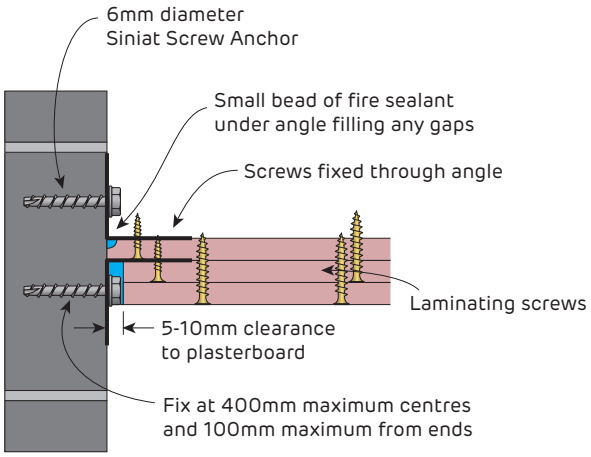

FIGURE 7 Laminated Duct to Masonry Wall
Plan view

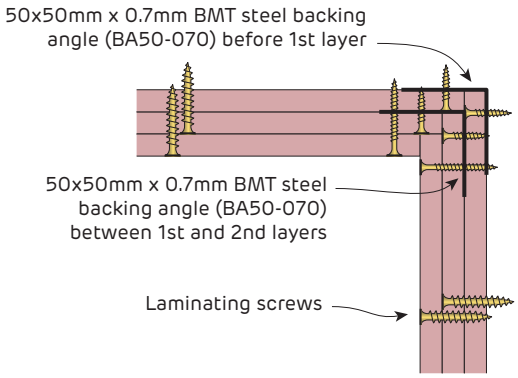

FIGURE 8 Laminated Duct Internal Corner
Plan view

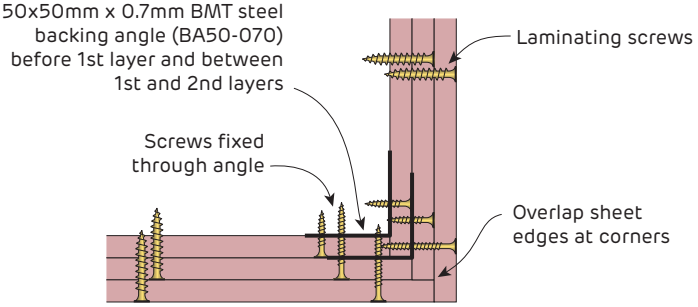

FIGURE 9 Laminated Duct External Corner
Plan view

Fire Rated

Details for the Fire Rated Laminated Riser Duct

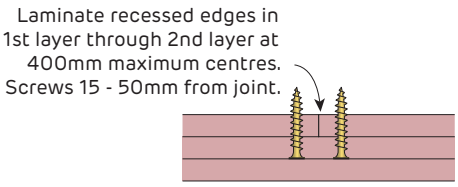

FIGURE 10 Laminated Duct Recessed Edge in 1st Layer
Plan view

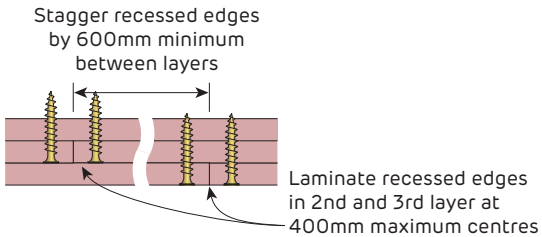

FIGURE 11 Laminated Duct Recessed Edge in 2nd and 3rd Layer
Plan view

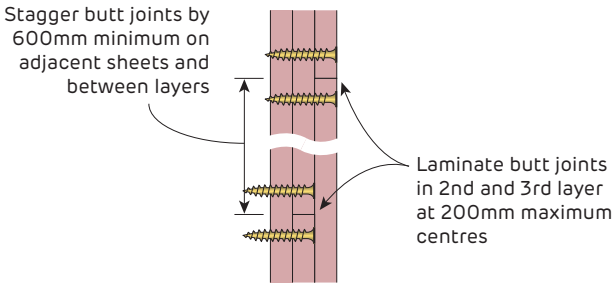

FIGURE 12 Laminated Duct Butt Joint in 2nd and 3rd Layer

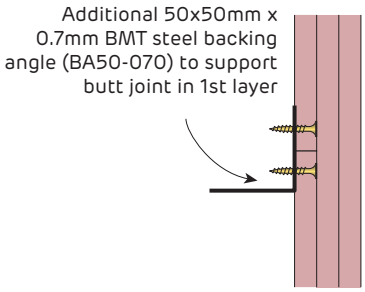

FIGURE 13 Laminated Duct Butt Joint in 1st Layer

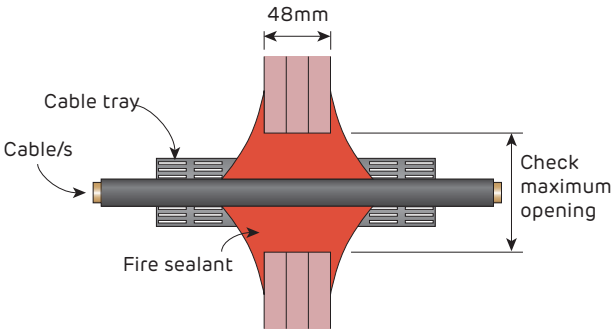

FIGURE 14 Typical Cable Tray Penetration
Up to 2 hours FRL
Example Only

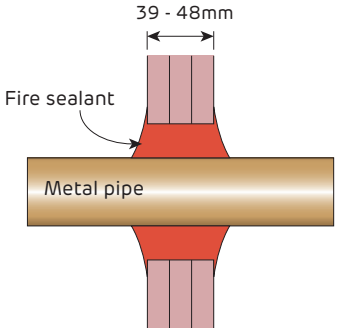

FIGURE 15 Typical Metal Pipe Penetration
Up to 2 hours FRL
Example Only

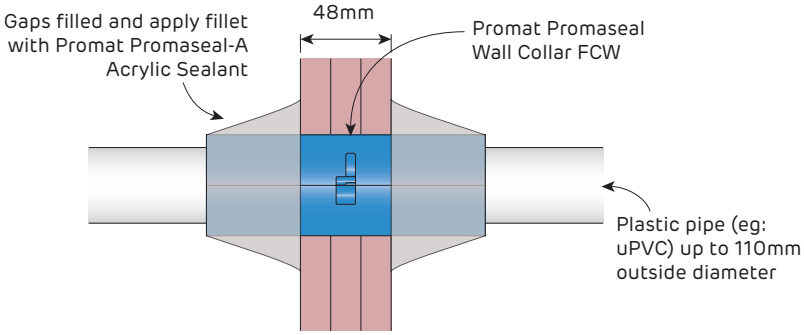

FIGURE 16 Fire Collar for Plastic Pipes
Promat Promaseal Wall Collar - Up to FRL -/120/90
Section



SYSTEMS	**627**
INSTALLATION	**629**
GENERAL REQUIREMENTS	629
FRAMING	629
PLASTERBOARD LAYOUT	629
PLASTERBOARD FIXING	630
CONSTRUCTION DETAILS	**634**

6.4 Column and Beam Fire Protection

Column and beam protection systems consist of **fire**shield and **shaft**liner layers protecting structural timber, steel or concrete. This enables the structural members to maintain their load carrying capacity in the event of a fire.

This section details the most common methods to encase timber, steel or concrete columns and beams to achieve a structural fire resistance level.

The FRL (Fire Resistance Level) for structural protection systems do not require the Integrity and Insulation ratings. They are expressed with only first number for structural adequacy and two dashes, for example 90/–/–

Steel and concrete protection systems limit the temperature directly beneath the plasterboard to 550°C. Timber protection systems limit char to less than 4mm.

Refer to *AS/NZS 1170.0:2002 Structural design actions Clause 4.2.4* for combinations of actions in a fire event.

For more information, refer to Section 2.3 Fire Resistance.

SFP1 - SFP9

- Steel column or beam encased in either **fire**shield or **shaft**liner

[Option 1] Plasterboard screwed to light gauge steel framing fixed to structural steel

[Option 2] Plasterboard directly fixed to structural steel

fireshield can be substituted with **multi**shield or **tru**rock

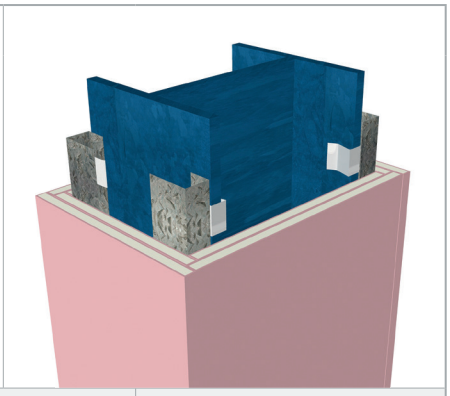

FRL	System	Plasterboard Lining	Plasterboard Thickness (mm)
30/ – / – Fire Report FC14029	SFP1	1 layer of 13mm **fire**shield	13
60/ – / – Fire Report FC14029	SFP2	1 layer of 16mm **fire**shield	16
60/ – / – Fire Report FC14029	SFP3	2 layers of 13mm **fire**shield	26
60/ – / – Fire Report FC14029	SFP4	1 layer of 25mm **shaft**liner	25
90/ – / – Fire Report FC14029	SFP5	2 layers of 16mm **fire**shield	32
120/ – / – Fire Report FC14029	SFP6	3 layers of 13mm **fire**shield	39
120/ – / – Fire Report FC14029	SFP7	1 layer of 13mm **fire**shield plus 1 layer of 25mm **shaft**liner	38
180/ – / – Fire Report FC14029	SFP8*	4 layers of 16mm **fire**shield	64
180/ – / – Fire Report FC14029	SFP9*	1 layer of 13mm **fire**shield plus 2 layers of 25mm **shaft**liner	63

*SFP8 and SFP9 can be installed as walls or bulkheads up to 1200mm wide with an FRL of 180/180/180. Fire Report 4522.

SFP10 - SFP30

- Timber column or beam (minimum dimensions 100 x 100mm) encased in either **fire**shield or **shaft**liner

[Option 1] Plasterboard screwed to light gauge steel framing fixed to structural timber

[Option 2] Plasterboard directly fixed to structural timber

fireshield can be substituted with **multi**shield or **tru**rock

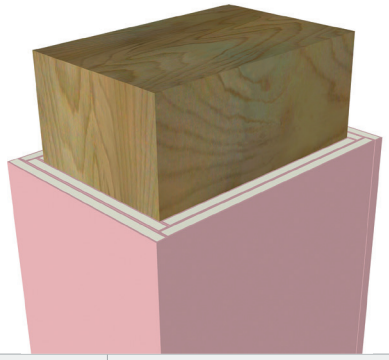

FRL	System	Plasterboard Lining	Plasterboard Thickness (mm)
30/ – / – Fire Report FC14029	SFP10	1 layer of 13mm **fire**shield	13
60/ – / – Fire Report FC14029	SFP11	2 layers of 13mm **fire**shield	26
60/ – / – Fire Report FC14029	SFP12	1 layer of 25mm **shaft**liner	25
90/ – / – Fire Report FC14029	SFP13	3 layers of 13mm **fire**shield	39
90/ – / – Fire Report FC14029	SFP14	1 layer of 13mm **fire**shield plus 1 layer of 25mm **shaft**liner	38
120/ – / – Fire Report FC14029	SFP15	3 layers of 16mm **fire**shield	48
180/ – / – Fire Report FC14029	SFP16	4 layers of 16mm **fire**shield	64

SFP20 - SFP24

- Concrete column encased in **fire**shield

[Option 1] Plasterboard screwed to light gauge steel framing fixed to concrete

[Option 2] Plasterboard fixed to concrete directly with Tapcon countersunk screws

fireshield can be substituted with **multi**shield or **tru**rock

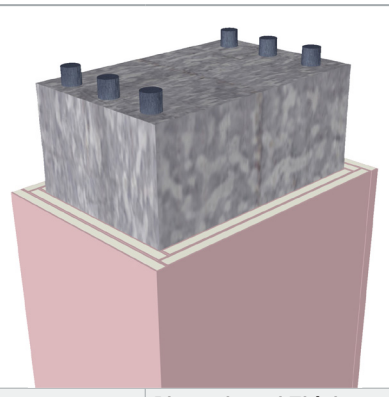

FRL	System	Plasterboard Lining	Plasterboard Thickness (mm)
Concrete Structural Adequacy + 30/ – / – Fire Report FC14029	SFP20	1 layer of 13mm **fire**shield	13
Concrete Structural Adequacy + 60/ – / – Fire Report FC14029	SFP21	1 layer of 16mm **fire**shield	16
Concrete Structural Adequacy + 90/ – / – Fire Report FC14029	SFP22	2 layers of 16mm **fire**shield	32
Concrete Structural Adequacy + 120/ – / – Fire Report FC14029	SFP23	3 layers of 13mm **fire**shield	39
Concrete Structural Adequacy + 180/ – / – Fire Report FC14029	SFP24	4 layers of 16mm **fire**shield	64

General Requirements

	Fire Rated
Only joint the face layer. As a minimum, use paper tape with either masta**base**, masta**longset**, masta**line**, masta**tape-in** or masta**lite** applied in one or two coats to the thickness of two coats.	✓
Use fire sealant on all gaps and around perimeter.	✓
Check the NCC Volume One, Section C1.8 for additional requirements for columns such as filling any void solid up to 1.2m high, or to provide further damage protection.	✓
Protect intersecting framing members to the column or beam with 450mm of the plasterboard protection system or Promat Promaseal® Supawrap 40.	✓
Fix items such as top hats through the plasterboard into the column or beam using maximum 12g screws.	✓
Mitred and folded corners are permitted for single layer systems only.	✓

Framing

	Fire Rated
Install steel framing members at maximum 300mm centres in the horizontal plane (bottom of beams) and maximum 600mm centres in the vertical plan (columns and, top and sides of beams). Steel framing may be screwed, welded or riveted to the column or beam.	✓
Install steel framing at each end of the column/beam and behind first layer butt joints.	✓
Use Table 1 for furring channels onto columns and Section 5.1 for furring channels onto beams. Alternatively for top hats, refer to Section 4.5 for columns or Section 5.5 for beams.	✓

Table 1 Furring Channel Anchor Spacing to Columns

Framing Member	Columns
13mm Recessed Furring Channel	900mm
18mm Furring Channel (FC18)	900mm
28mm Furring Channel (FC28)	900mm

Anchors for furring channel must also be fixed 100mm maximum from ends.

Plasterboard Layout

	Fire Rated
Stagger butt joints by 300mm minimum on adjoining sheets and between layers.	✓
Stagger recessed edges by 300mm minimum between layers.	✓

Plasterboard Fixing

	Fire Rated
Use the 'Screw Only Method'. Stud adhesive is not permitted.	✓
Drive screws to just below the sheet surface, taking care not to break the paper linerboard. For over-driven screws, install another screw 20mm away. Leave or remove the over-driven screw and patch.	✓
Laminating screws can be used to fix butt joints in the second, third and fourth layers.	✓
Fix plasterbooard to a column or beam using maximum 12g screws.	✓

Screw Type and Minimum Size for the Installation of Plasterboard to Steel

Plasterboard Thickness	1st Layer	2nd Layer	3rd Layer	4th Layer
13mm	6g x 25mm screw	6g x 41mm screw	7g x 57mm screw or 10g - 38mm laminating screws	-
16mm	6g x 32mm screw	6g x 45mm screw	8g x 65mm screw or 10g - 38mm laminating screws	10g - 38mm laminating screws
25mm	6g x 41mm screw	-	-	-
13mm + 25mm + 25mm	6g x 25mm screw	7g x 50mm screw	10g - 50mm laminating screws	-

For steel ≤ 0.75mm BMT, use fine thread needle point screws.
For steel ≥ 0.75mm BMT, use fine thread drill point screws.

Screw Type and Minimum Size for the Installation of Plasterboard to Timber

Plasterboard Thickness	1st Layer	2nd Layer	3rd Layer	4th Layer
13mm	6g x 40mm screw	8g x 50mm screw	10g - 38mm laminating screws	-
16mm	6g x 45mm screw	8g x 60mm screw	10g - 38mm laminating screws	10g - 38mm laminating screws
25mm	8g x 50mm screw	10g - 50mm laminating screws	-	-
13mm + 25mm	6g x 40mm screw	8g x 65mm screw	-	-

10g x 38mm Laminating screws may be used as detailed in installation diagrams.

Screw Type and Minimum Size for the Installation of Plasterboard to Concrete

Plasterboard Thickness	1st Layer	2nd Layer	3rd and 4th Layer
13mm	10g - 32mm tapcon screw	10g - 45mm tapcon screw	10g - 38mm laminating screws
16mm	10g - 32mm tapcon screw	10g - 45mm tapcon screw	10g - 38mm laminating screws

For concrete use tapcon screws with countersunk head.

FIGURE 1 Steel Column or Beam
Screw Only Method

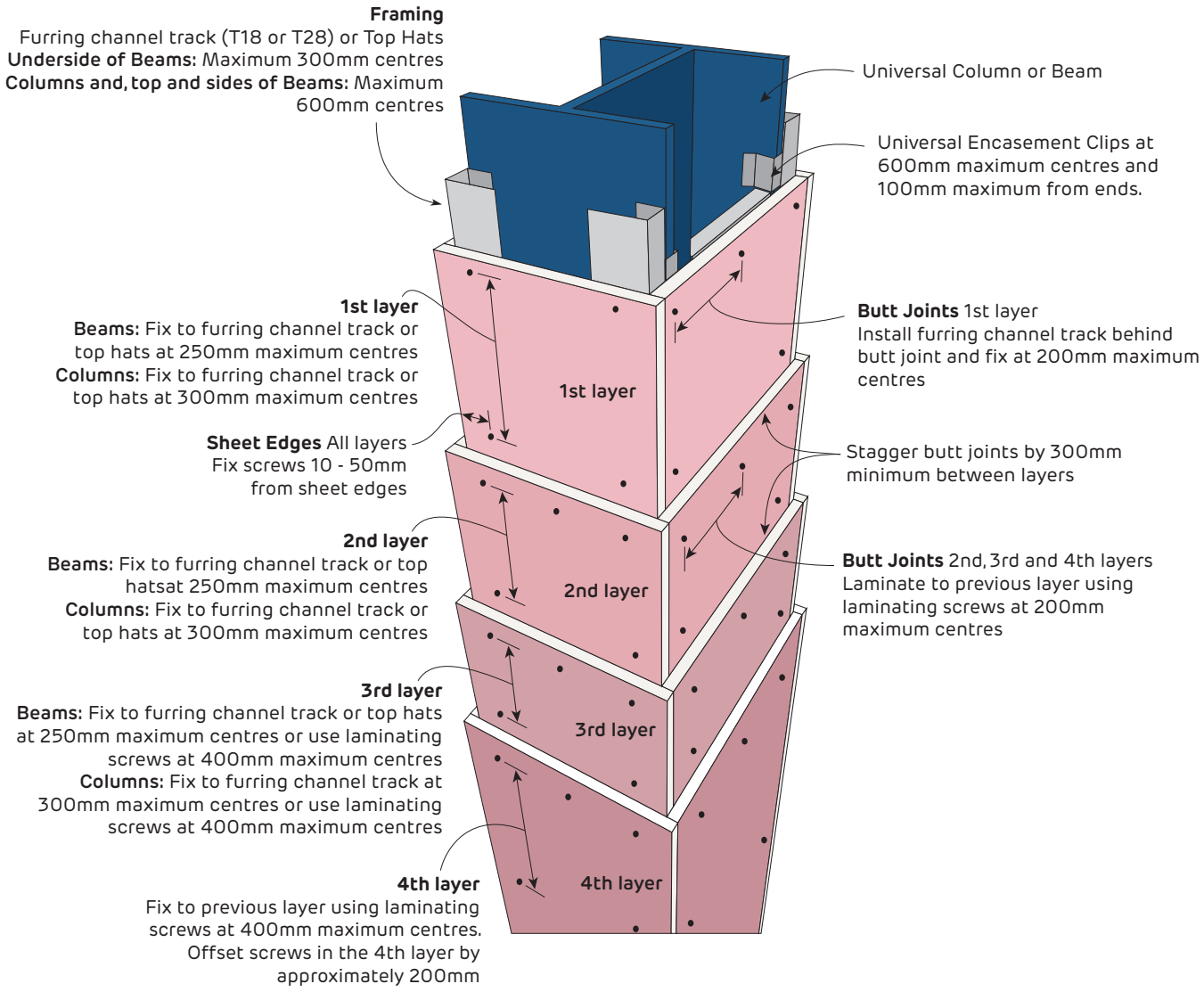

FIGURE 2 Timber Column or Beam
Screw Only Method

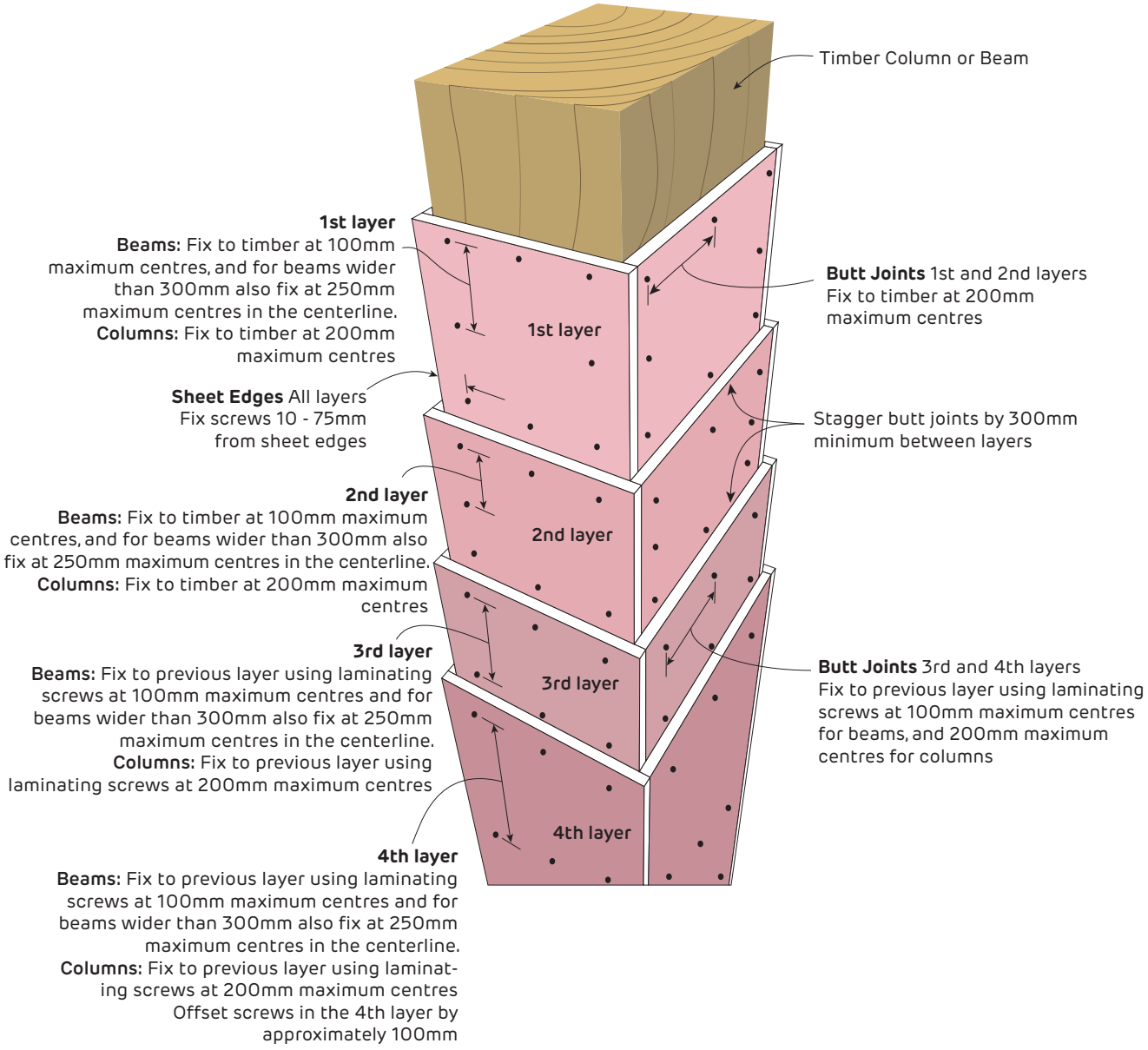

FIGURE 3 Concrete Column or Beam
Screw Only Method

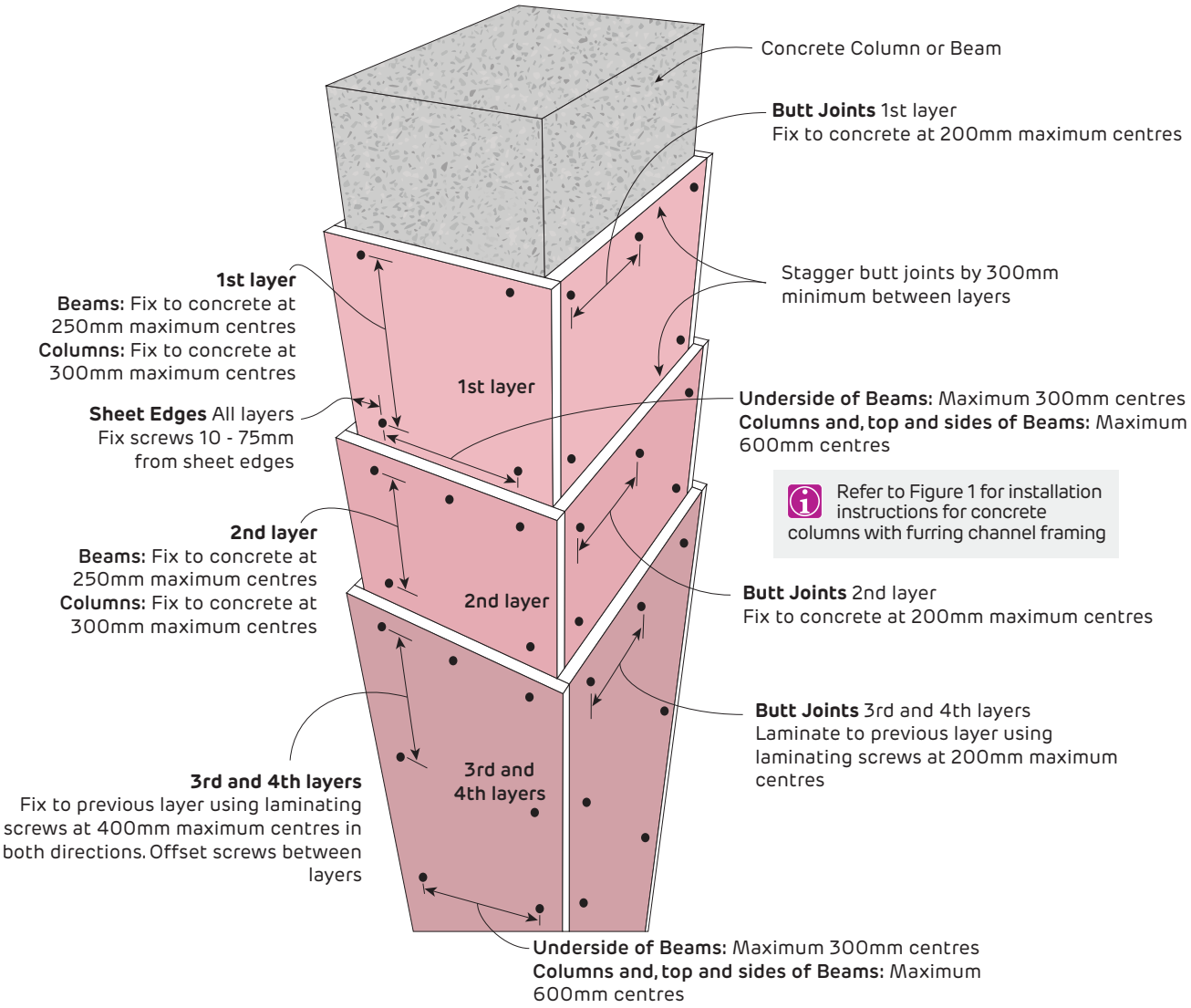

Fire Rated
Details for Steel Column and Beam Fire Protection

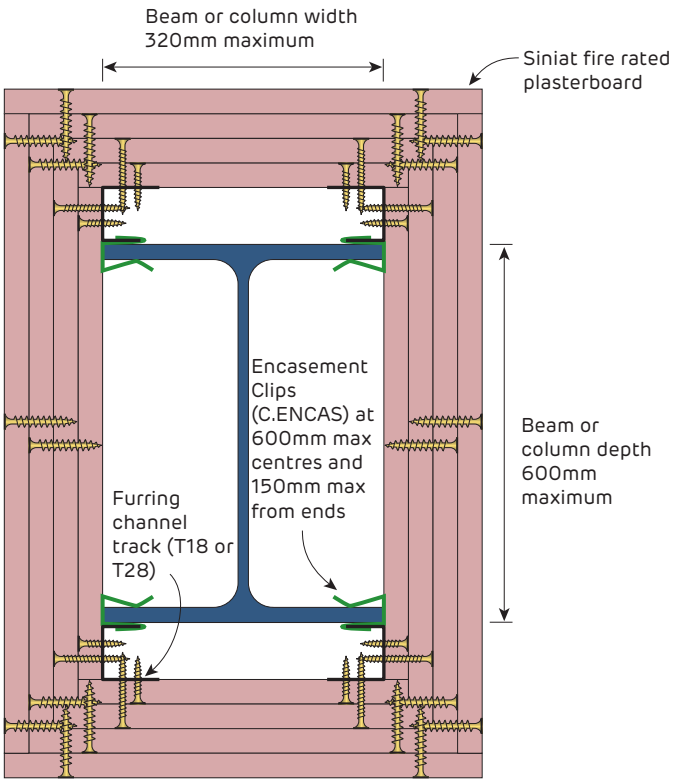

FIGURE 4 4 Sided Protection for I-Beam/Column
Plan or Section

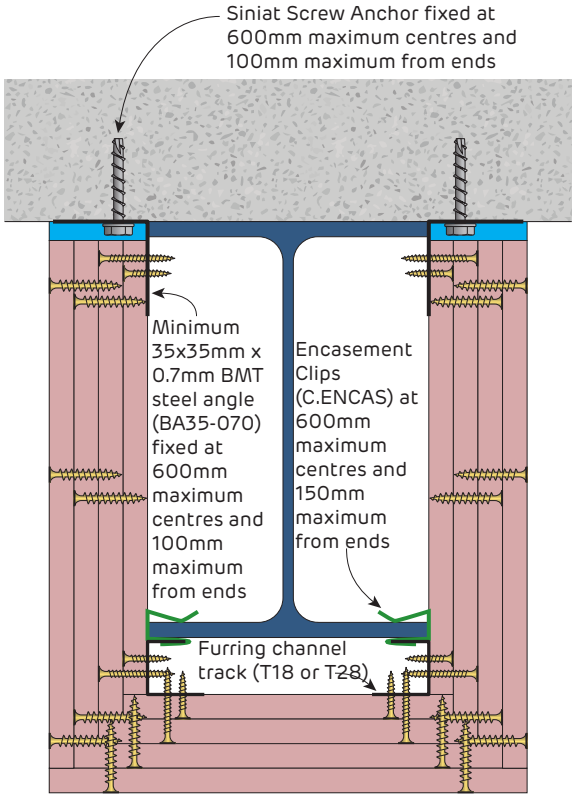

FIGURE 5 3 Sided Protection for I-Beam/Column
Plan or Section

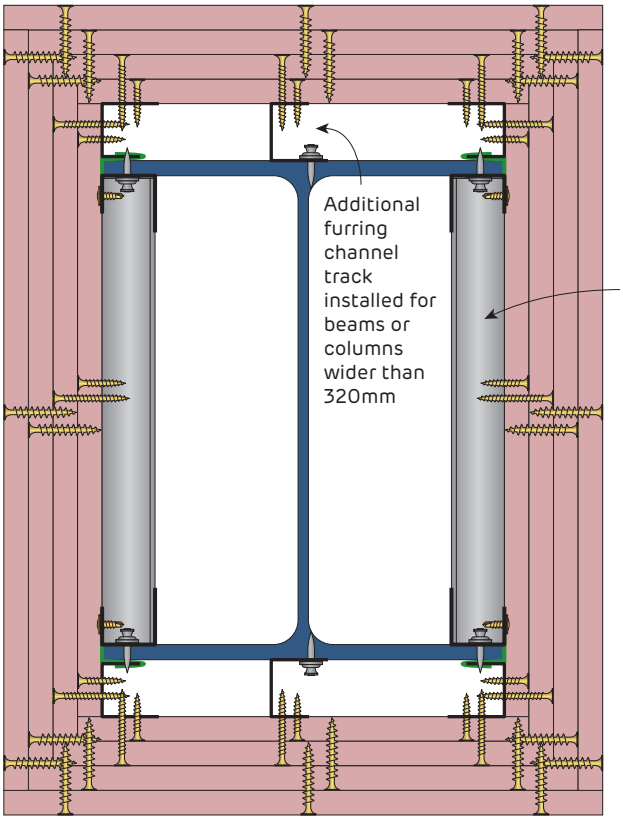

For corner gaps up to 3mm, fill with either Bindex Fire and Acoustic sealant or Mastabase jointing compound. Fill any other gaps with Bindex sealant to maintain integrity.

FIGURE 6 4 Sided Protection for I-Beam/Column
Plan or Section

Fire Rated
Details for Steel Column and Beam Fire Protection

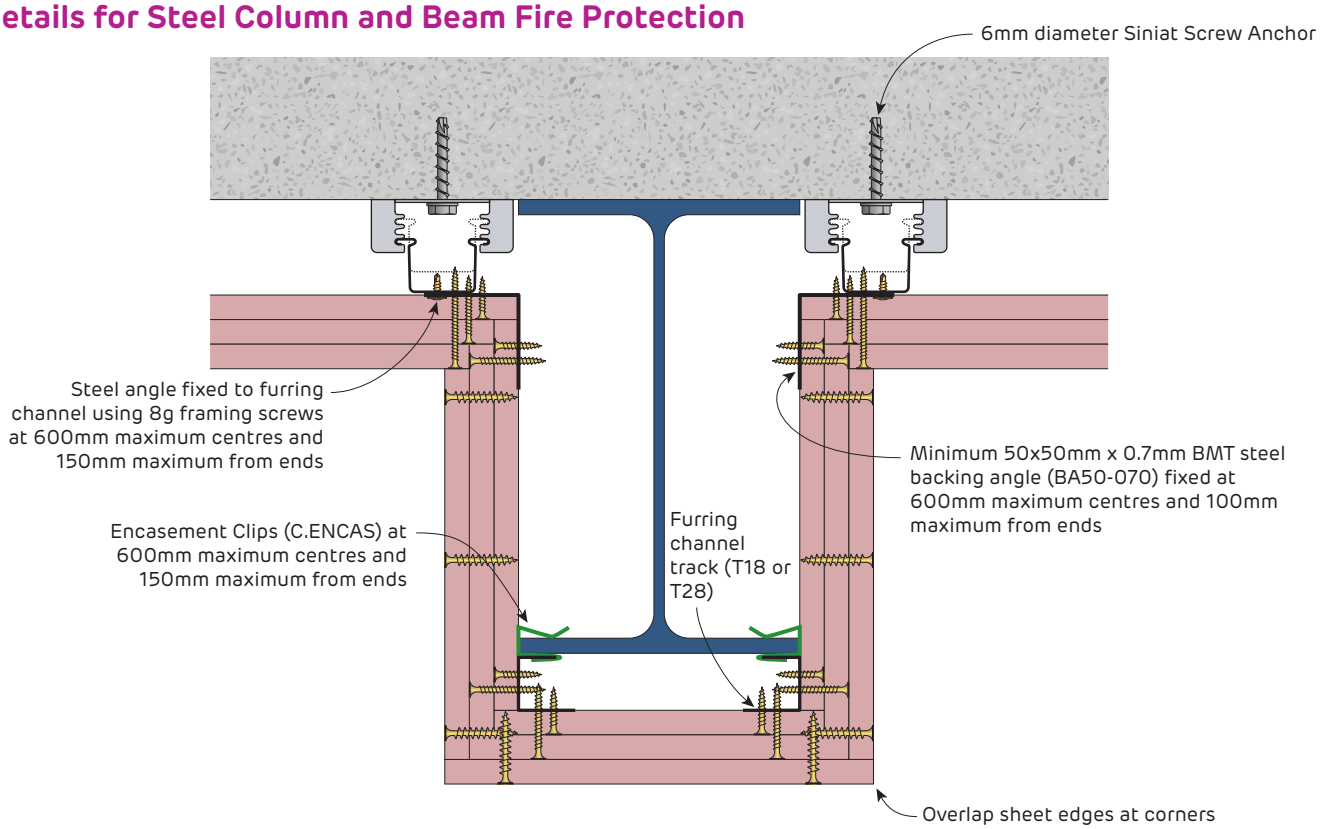

FIGURE 7 3 Sided Protection for I-Beam to Ceiling
Section

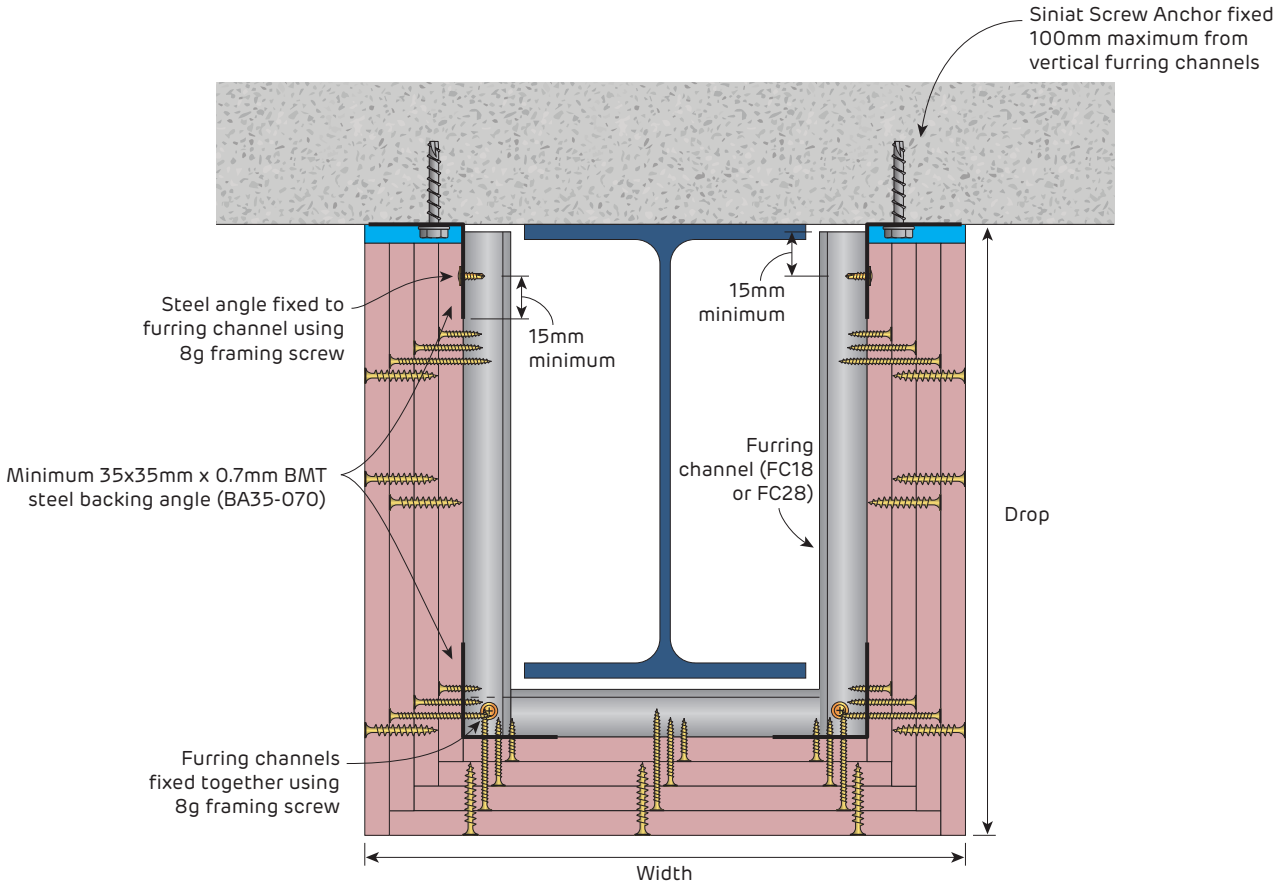

FIGURE 8 U-Shaped Bulkhead
Section

Fire Rated
Details for Steel Column and Beam Fire Protection

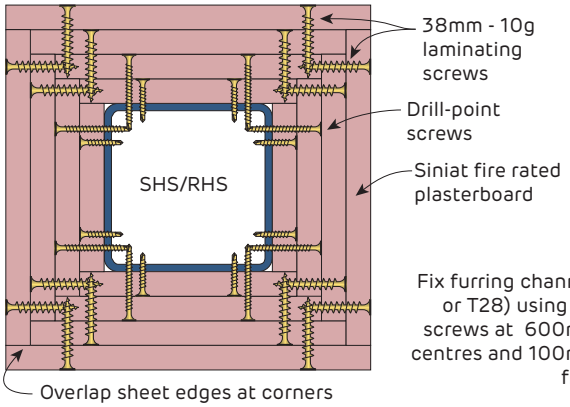

FIGURE 9 4 Sided Protection for SHS / RHS
Plan or Section

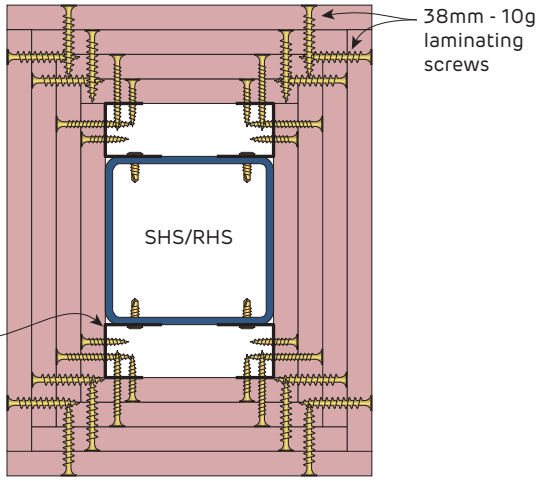

FIGURE 10 4 Sided Protection for SHS / RHS
Plan or Section

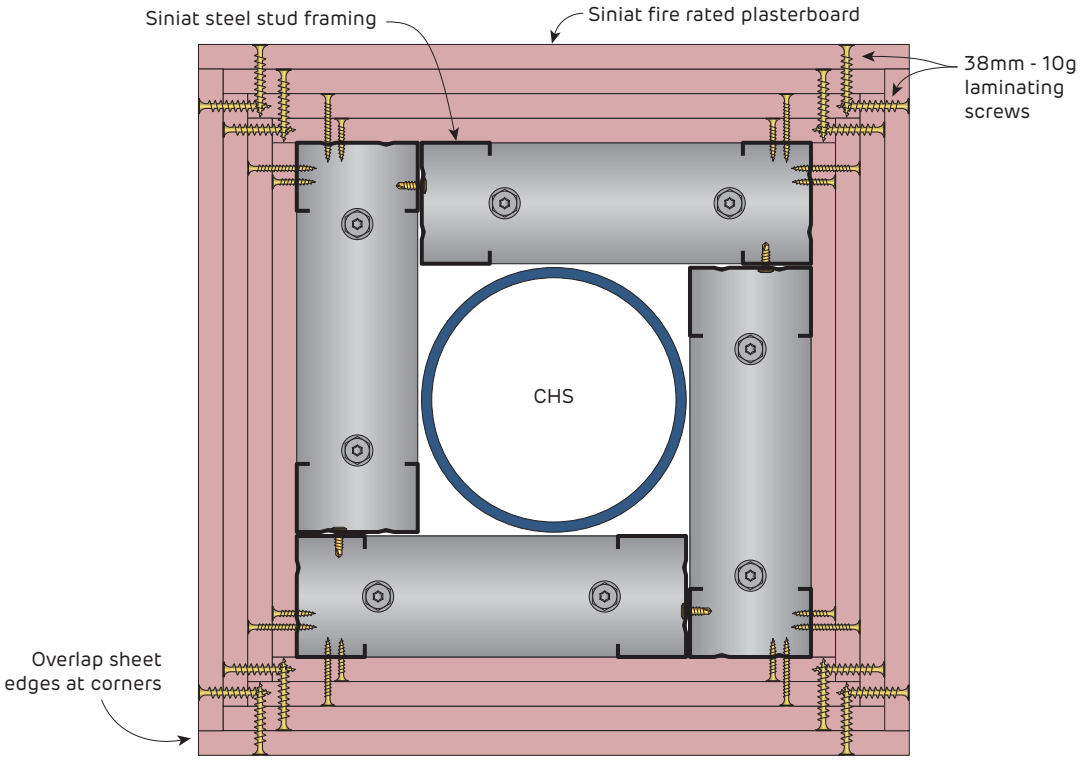

FIGURE 11 4 Sided Protection for CHS
Plan

For corner gaps up to 3mm, fill with either Bindex Fire and Acoustic sealant or Mastabase jointing compound. Fill any other gaps with Bindex sealant to maintain integrity.

Fire Rated
Details for Timber Column and Beam Fire Protection

For corner gaps up to 3mm, fill with either Bindex Fire and Acoustic sealant or Mastabase jointing compound. Fill any other gaps with Bindex sealant to maintain integrity.

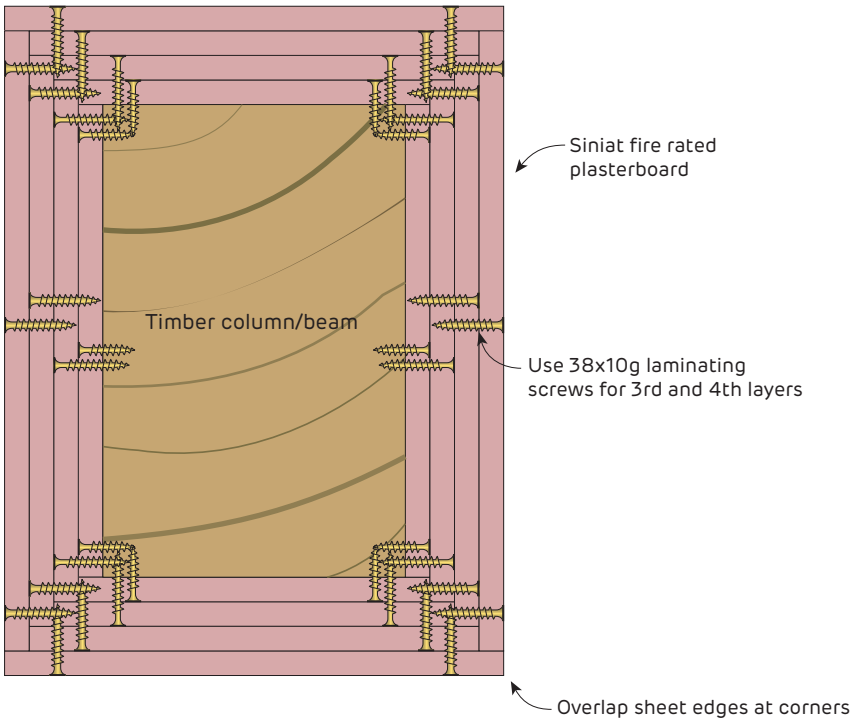

FIGURE 12 4 Sided Protection Timber Column/Beam
Plan or Section

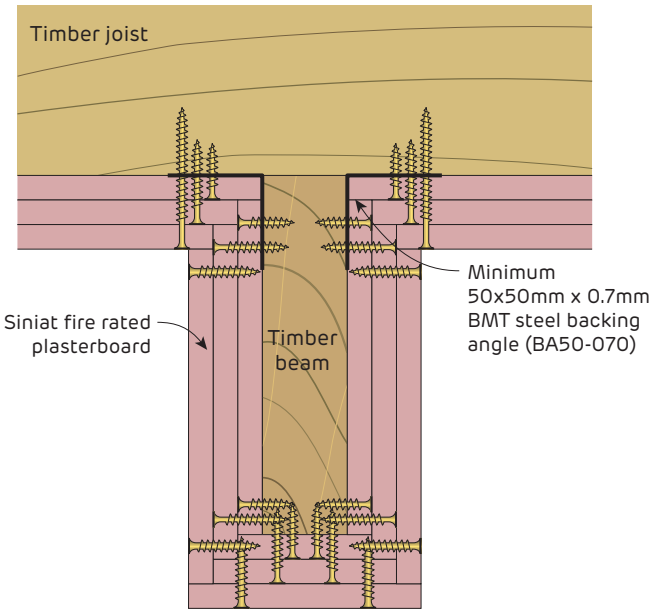

FIGURE 13 3 Sided Protection Timber Beam
Section

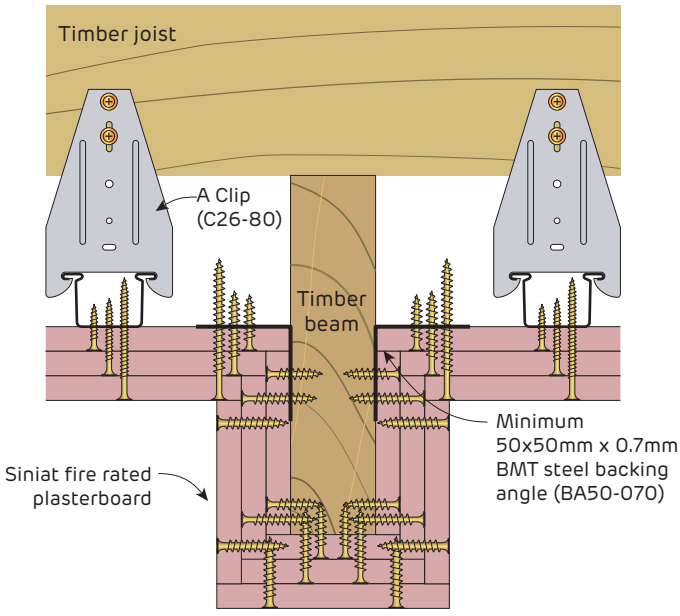

FIGURE 14 3 Sided Protection for Timber Beam to Ceiling
Section

Fire Rated
Details for Concrete Column and Beam Fire Protection

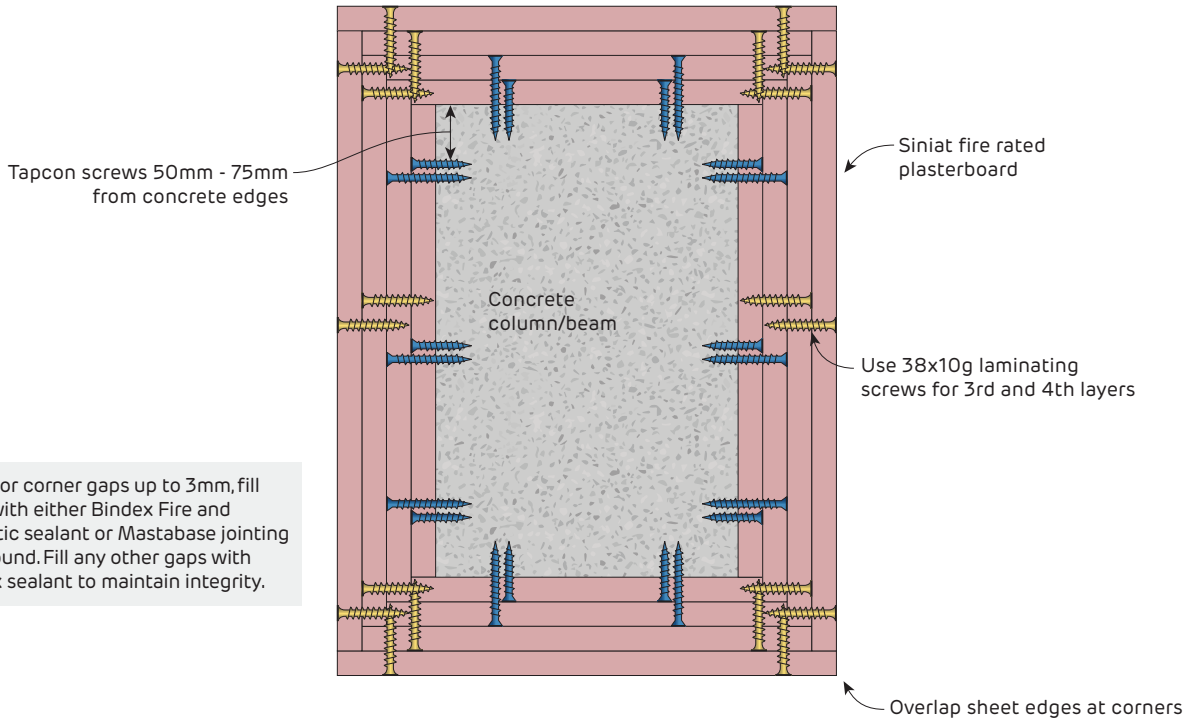

For corner gaps up to 3mm, fill with either Bindex Fire and Acoustic sealant or Mastabase jointing compound. Fill any other gaps with Bindex sealant to maintain integrity.

FIGURE 15 4 Sided Protection Concrete Column/Beam
Plan

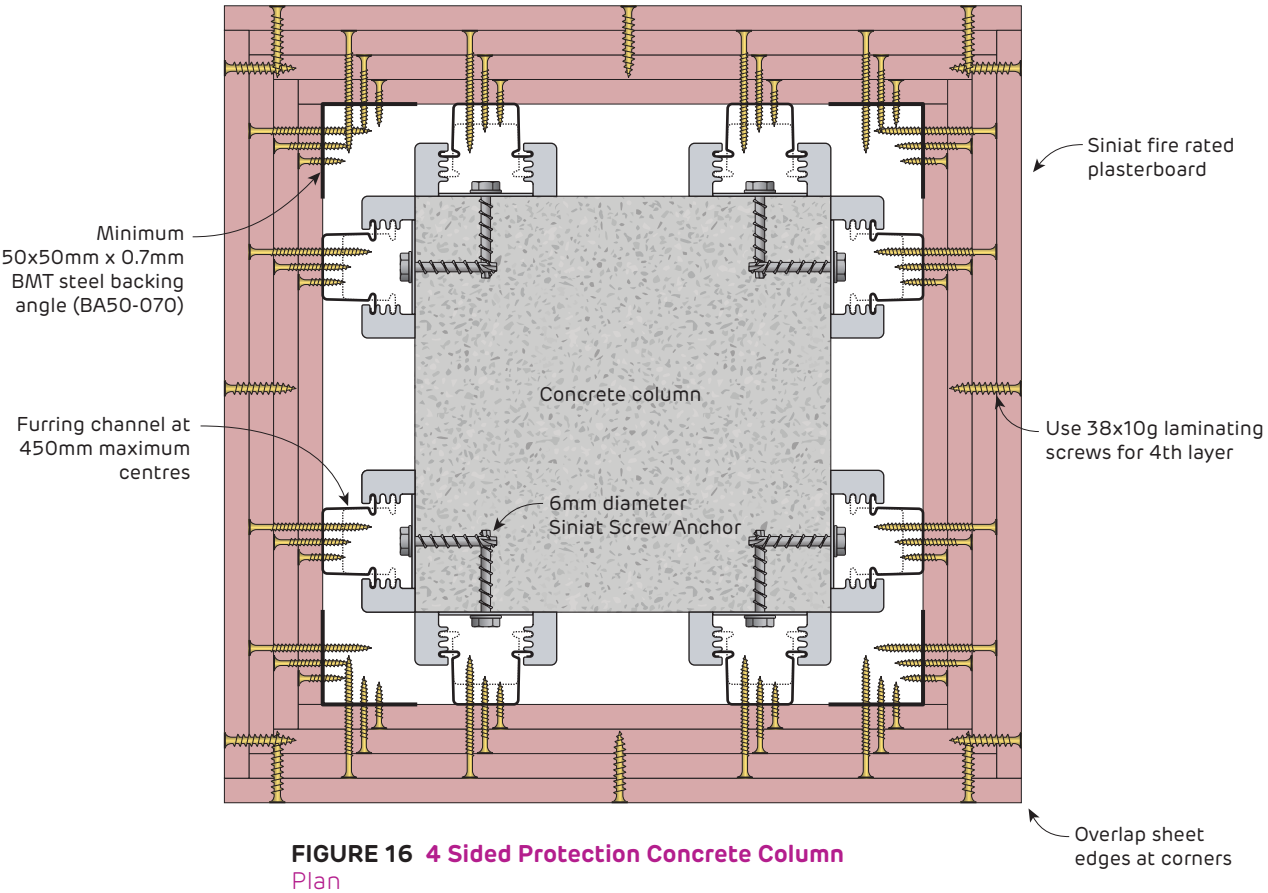

FIGURE 16 4 Sided Protection Concrete Column
Plan

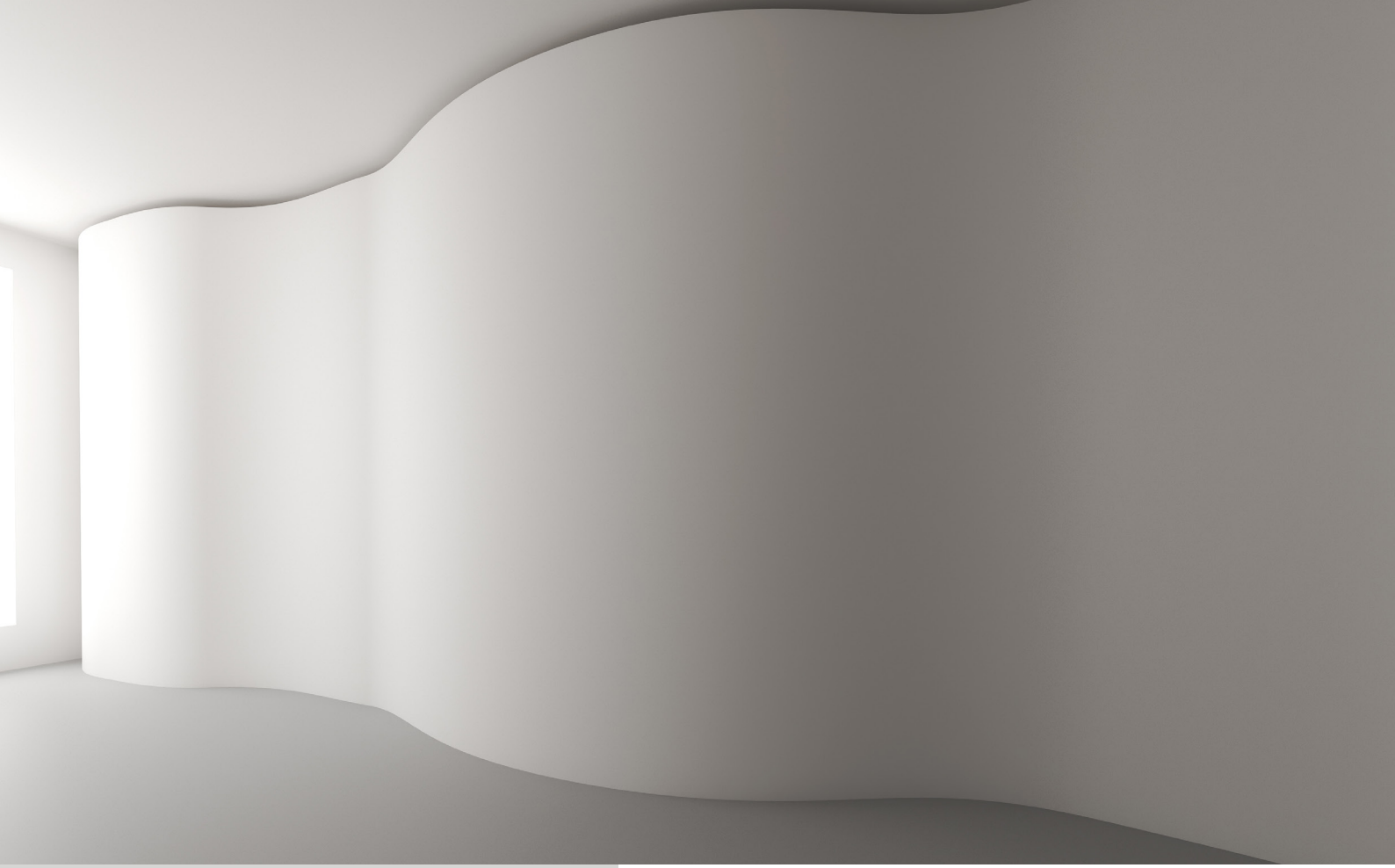

INSTALLATION	**640**
GENERAL REQUIREMENTS	640
FRAMING	640
CONSTRUCTION DETAILS	**643**

6.5 Curved Walls and Ceilings

Plasterboard can be curved to create imaginative architectural effects. With careful installation and proper framing methods, tightly curved walls and ceilings are possible.

curveshield is designed for this purpose and will achieve the tightest curves. All of the Siniat plasterboard product range can be curved if required.

This section provides details on how to bend plasterboard, including installation, framing geometry and bend radius information.

General Requirements

Only use curveshield for applications where the radius is less than 900mm.
Fix ceiling framing at 300mm maximum centres for installation of curveshield.
Ensure that the radius on the convex side is not too tight for the corresponding concave side.
Stagger recessed edges and butt joints by 200mm minimum between layers.

Wetting Curved Plasterboard

Hot, humid conditions are ideal for curving plasterboard. In cold, low-humidity conditions or if very tight curves are required, prepare the plasterboard as follows:

- Use a clean paint roller or sponge to apply a small amount of water to the plasterboard surface that will be in compression. Add a small amount of detergent to the water in very dry conditions to act as a wetting agent.
- Allow at least 15 minutes for the water to soak in before bending the plasterboard.

- Siniat Flexi-Track and stud system is recommended for framing curved walls or ceilings.
- Avoid joints parallel to studs in the curved section.
- Only the face layer needs to be jointed.
- The minimum curve radius is determined by the concave side.
- Two layers of curveshield must be used (single layer is not permitted).
- A tighter curve radius can be achieved by curving widthways [Figure 2]

Framing

Table 1 Maximum Frame Spacing and Minimum Curve Radius for Curveshield

curveshield	Curve Radius (mm)						
	250 - 450	450 - 600	650 - 900	900 - 1000	1000 - 1500	1500 - 2000	> 2000
	Maximum Framing Centres (mm)						
Concave - curved along length	-	-	200	200	200	250	300
Convex - curved along length	-	200	200	200	200	250	300
Concave - curved along width	-	150	150	150	200	250	300
Convex - curved along width	125	150	150	150	200	250	300

Table 2 Maximum Frame Spacing and Minimum Curve Radius for regular Plasterboard

Other Plasterboards	mastashield only				All plasterboard except perforated		
	900 - 1000	1000 - 1500	1500 - 2000	2000 - 2500	2500 - 3000	3000 - 4000	> 4000
Plasterboard Thickness	Maximum Framing Centres (mm)						
10mm	150	200	250	300	350	400	500
13mm	-	150	200	250	300	400	500
16mm	-	-	-	-	200	250	350

FIGURE 1 Concave Wall - Horizontal
Curved lengthways
Screw Only Method

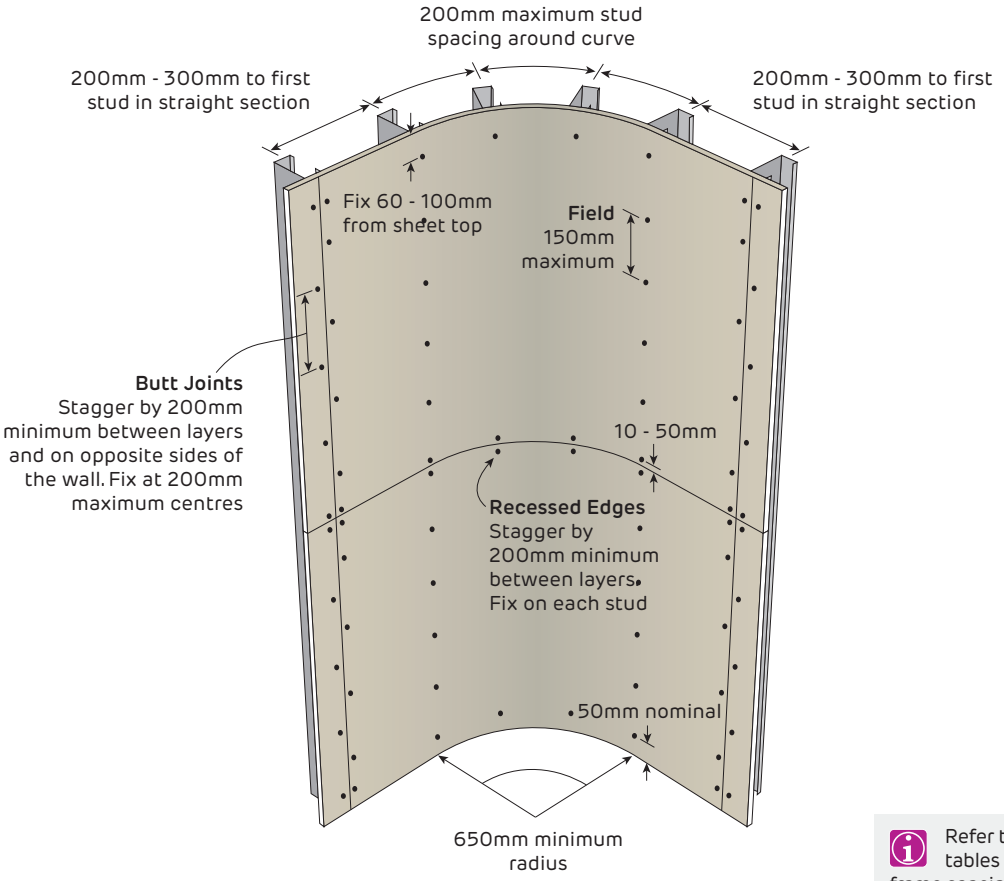

Refer to framing tables for maximum frame spacing along curves

FIGURE 2 Concave Wall - Vertical
Curved widthways
Screw Only Method

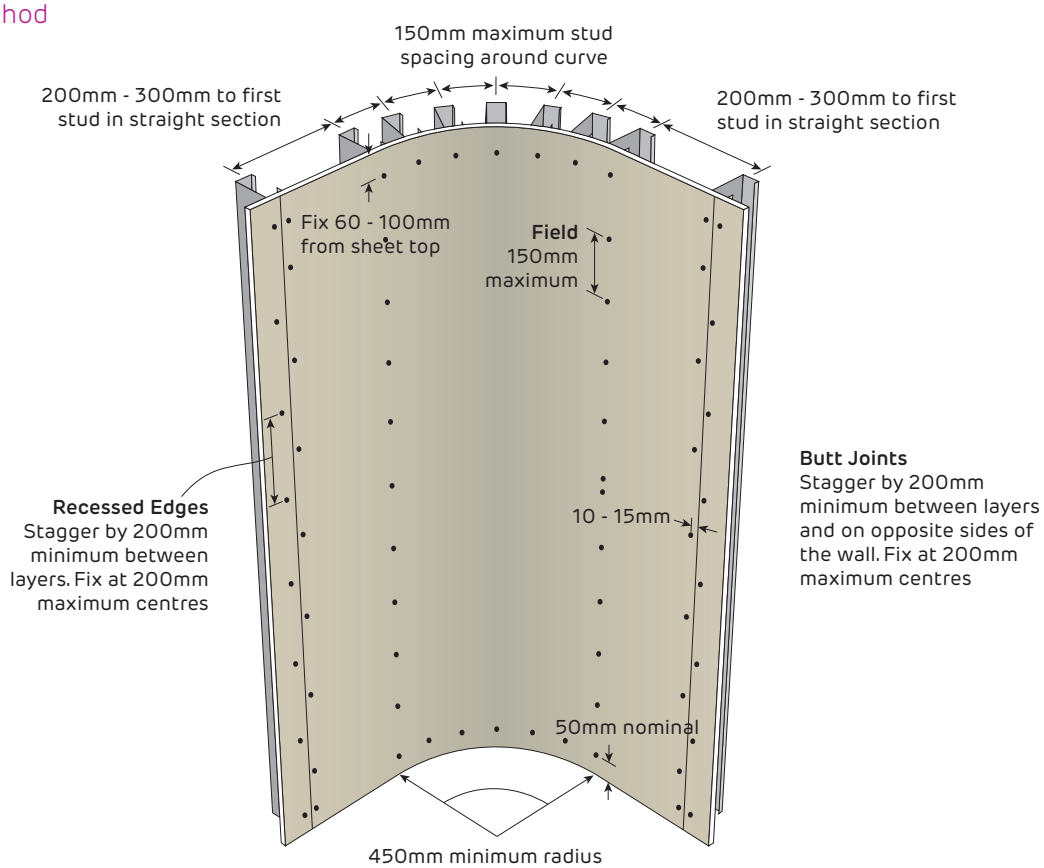

FIGURE 3 Convex Wall - Horizontal
Curved lengthways
Screw Only Method

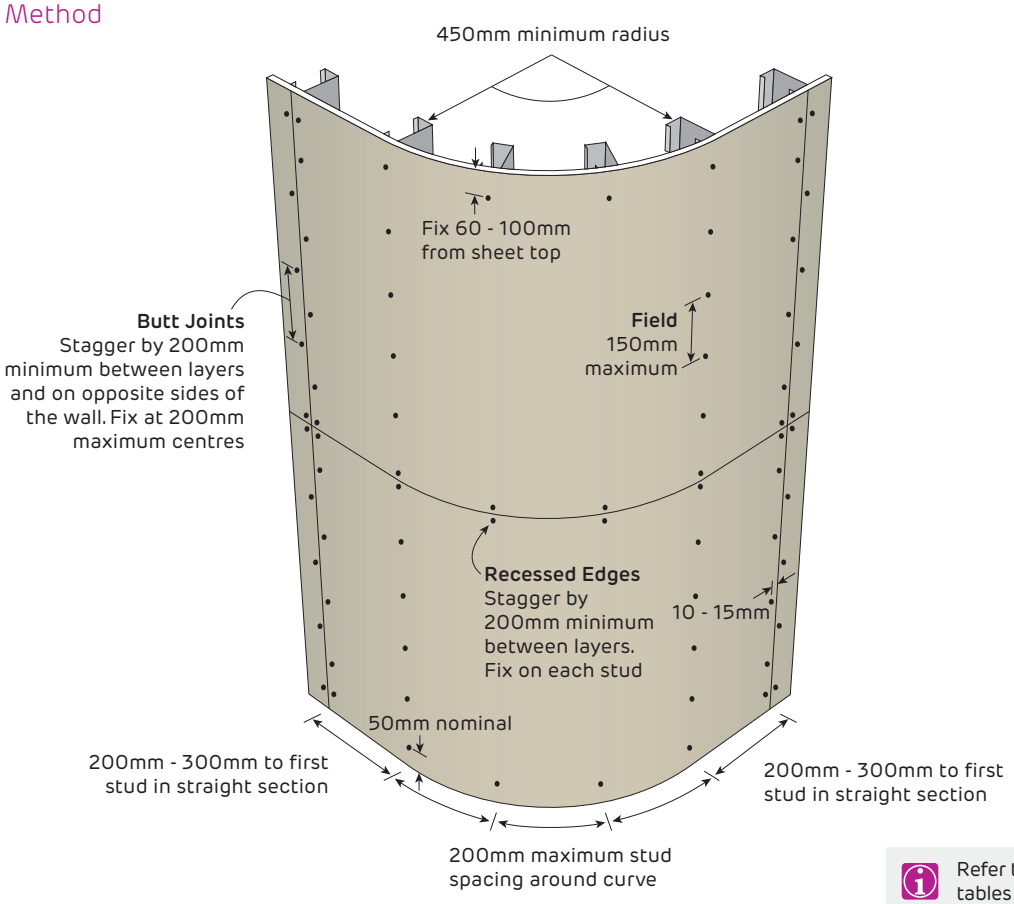

Refer to framing tables for maximum frame spacing along curves

FIGURE 4 Convex Wall - Vertical
Curved widthways
Screw Only Method

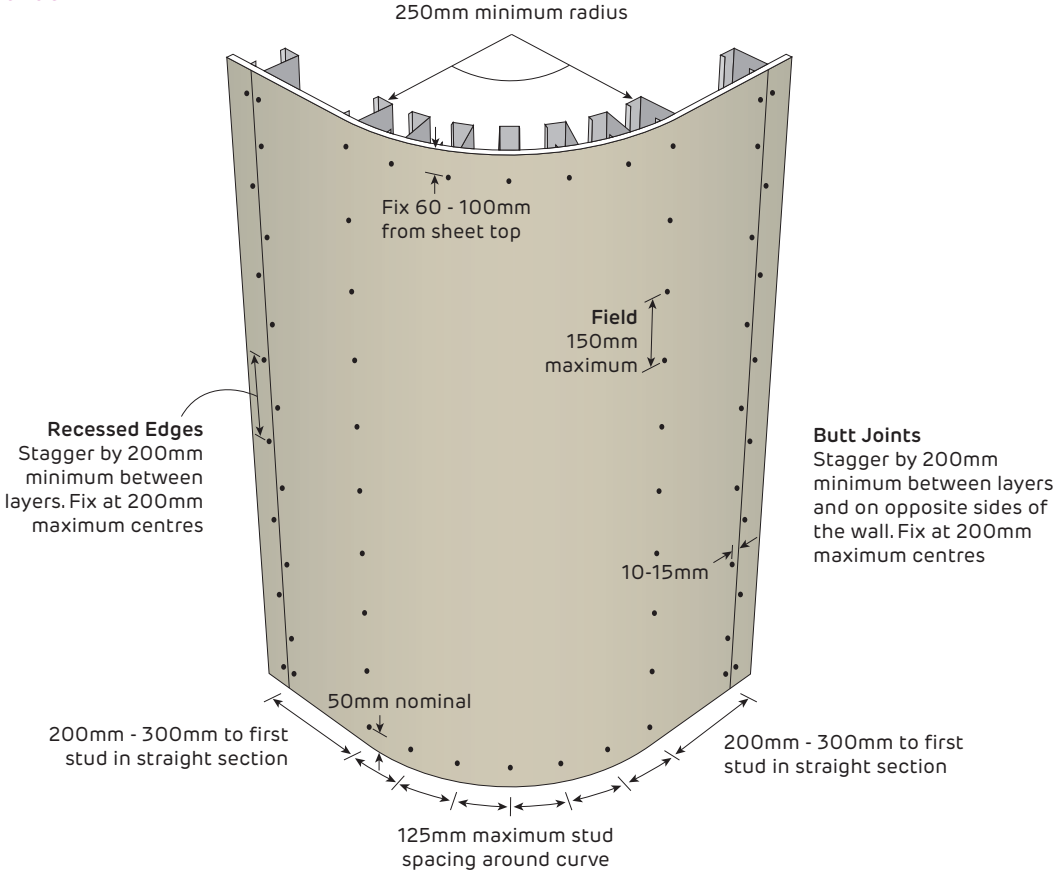

Non-Fire Rated
Curved Wall

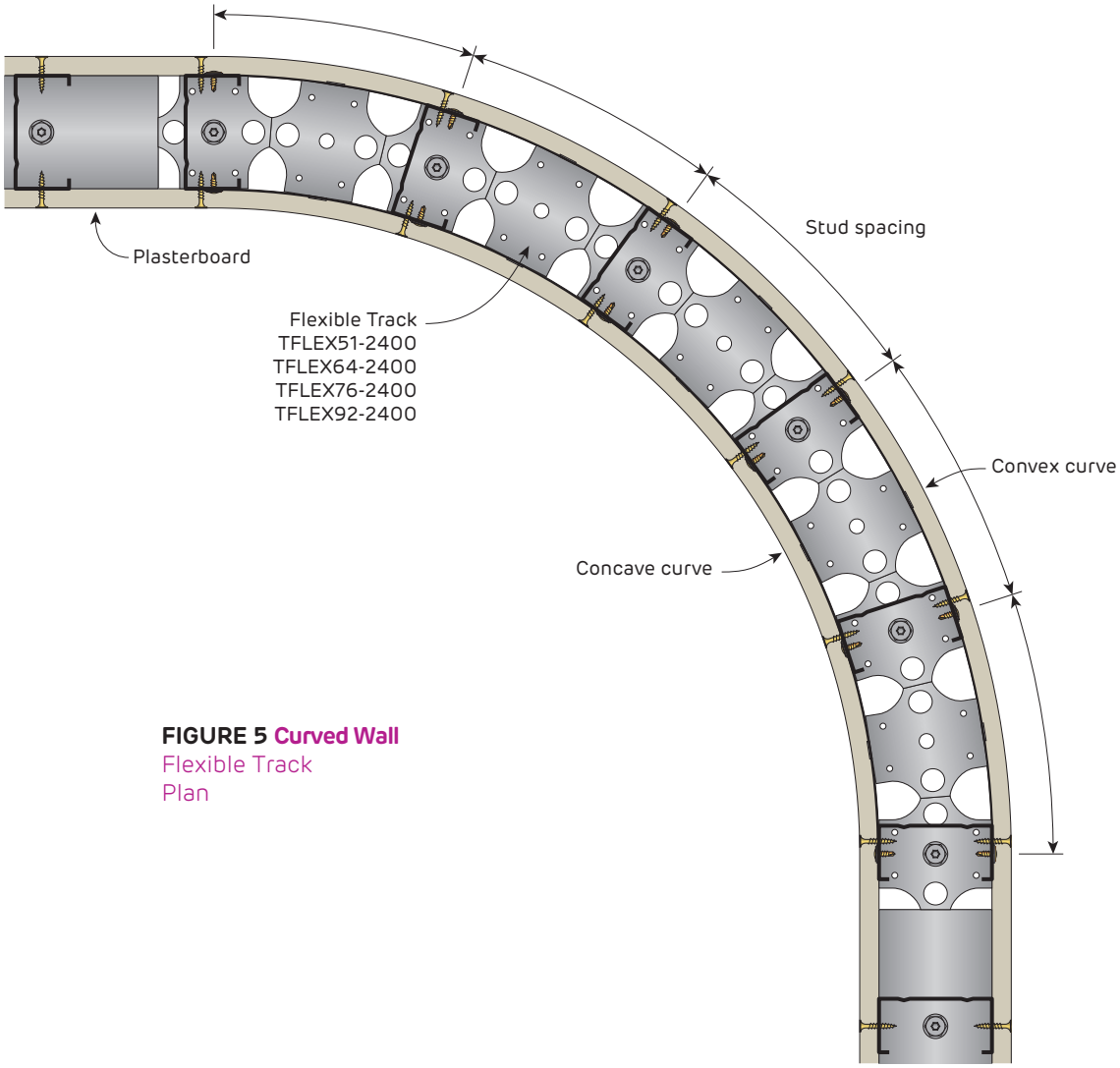

FIGURE 5 Curved Wall
Flexible Track
Plan

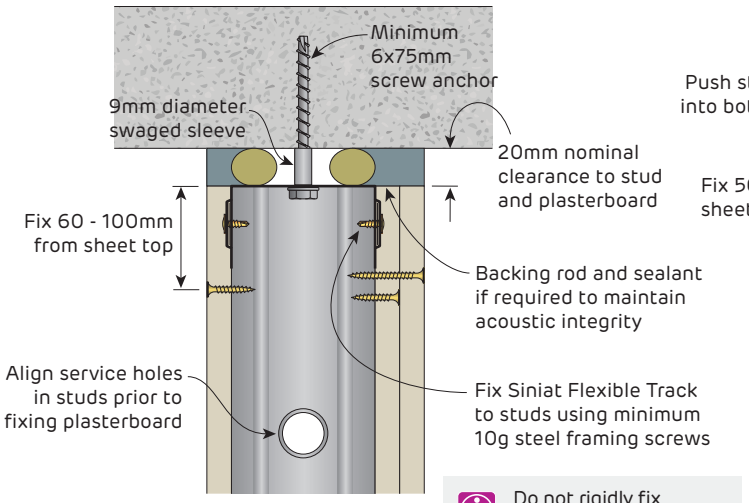

FIGURE 6 Wall Head
Flexible Track
Section

Do not rigidly fix cornice to non-load bearing wall head and soffit, as slab deflection is expected.

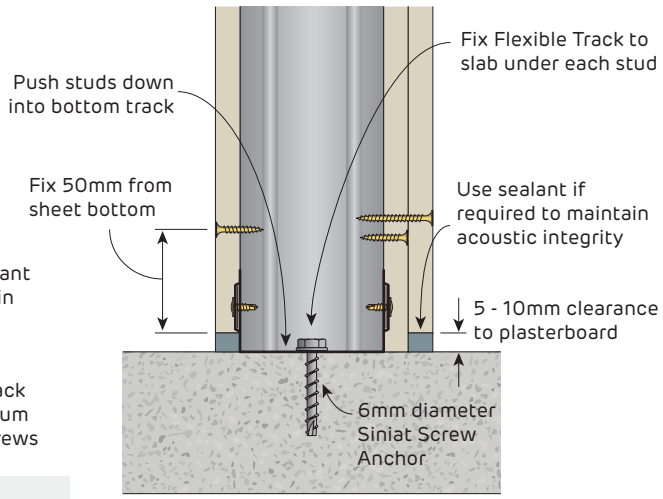

FIGURE 7 Wall Base
Flexible Track
Section

Non-Fire Rated
Curved Ceiling

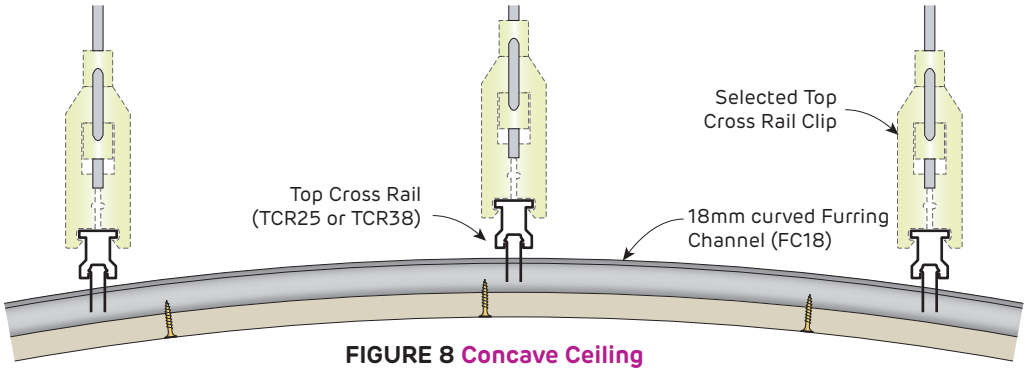

FIGURE 8 Concave Ceiling
Concave furring channel
Section

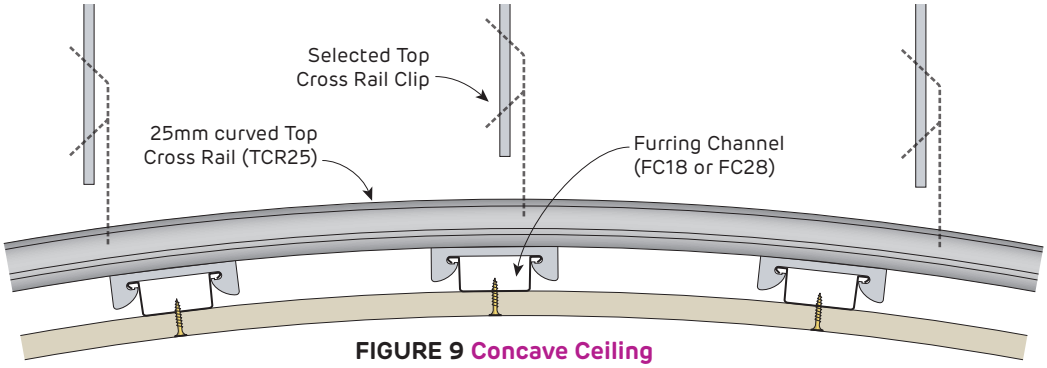

FIGURE 9 Concave Ceiling
Concave top cross rail
Section

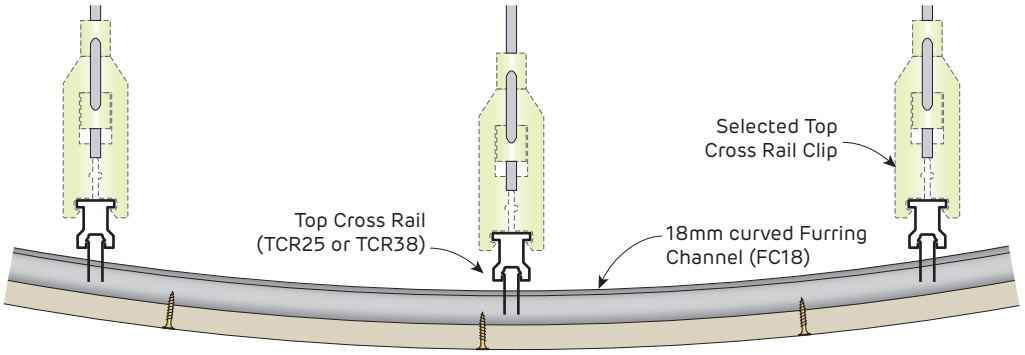

FIGURE 10 Convex Ceiling
Convex furring channel
Section

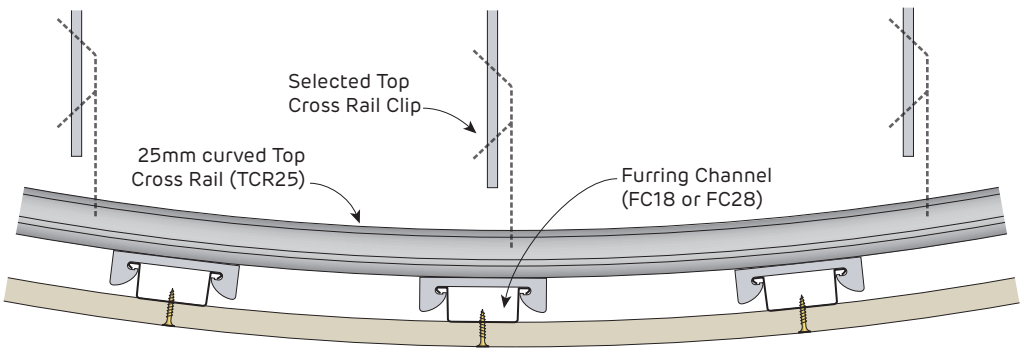

FIGURE 11 Convex Ceiling
Convex top cross rail
Section



SYSTEMS	**646**
RADIATION TEST RESULTS	648
INSTALLATION	**649**
GENERAL REQUIREMENTS	649
FRAMING	649
PLASTERBOARD LAYOUT	650
PLASTERBOARD FIXING	650
CONSTRUCTION DETAILS	**655**

6.6 X-Ray Protection Systems

GIB **x-block**® is a lead free plasterboard system used as an effective radiation barrier. Barium Sulphate in the GIB **x-block**® plasterboard and compound provide protection against X-rays.

X-ray shielding requirements are usually specified as a thickness of lead. The lead equivalence of GIB **x-block**® systems depend on the energy level of the radiation. Tables 1 and 2 state the lead equivalence of GIB **x-block**® systems at various X-ray energy levels. Always seek advice from a Health Physicist to ensure that the requirements for radiation shielding are met.

This section contains radiation test results, shielding requirements, systems, installation instructions and construction details for GIB **x-block**® systems. [Refer to Section 2.3 for more information on X-ray resistance]

XRP1

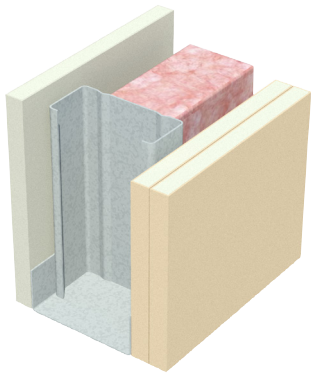

- 1 layer of 13mm **masta**shield
- Steel or timber stud framing at 600mm maximum centres
- 2 layers of 13mm GIB **x-block**®

Stud Depth (mm)	Width (mm)	Airborne Sound Insulation Rw (Rw + Ctr)		
		No insulation	Pink® Partition 50mm 11kg/m³ R1.2	Report Day Design 3094-4
64 steel	103	44 (38)	51 (42)	
70 timber	109	42 (37)	46 (41)	

XRP2

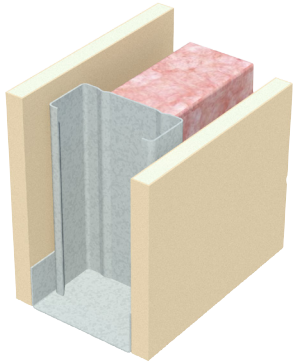

- 1 layer of 13mm GIB **x-block**®
- Steel or timber stud framing at 600mm maximum centres
- 1 layer of 13mm GIB **x-block**®

Stud Depth (mm)	Width (mm)	Airborne Sound Insulation Rw (Rw + Ctr)		
		No insulation	Pink® Partition 50mm 11kg/m³ R1.2	Report Day Design 3094-4
64 steel	90	40 (35)	49 (40)	
70 timber	96	38 (33)	42 (38)	

XRP3

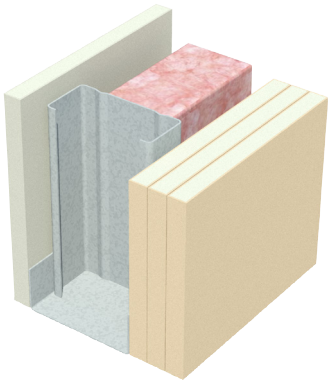

- 1 layer of 13mm **masta**shield
- Steel or timber stud framing at 600mm maximum centres
- 3 layers of 13mm GIB **x-block**®

Stud Depth (mm)	Width (mm)	Airborne Sound Insulation Rw (Rw + Ctr)		
		No insulation	Pink® Partition 50mm 11kg/m³ R1.2	Report Day Design 3094-4
64 steel	116	47 (41)	55 (45)	
70 timber	124	45 (40)	49 (44)	

XRP5

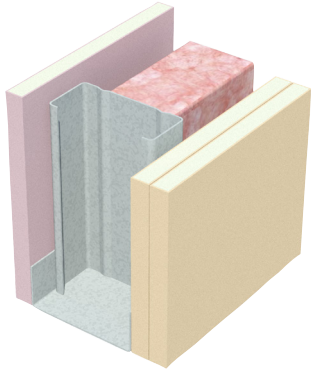

- 1 layer of 13mm **fire**shield
- Steel or timber stud framing at 600mm maximum centres
- 2 layers of 13mm GIB **x-block**®

Fire Resistance Level

-/60/60
rated from both sides

Report
FAR 2320

Stud Depth (mm)	Width (mm)	Airborne Sound Insulation Rw (Rw + Ctr)		
		No insulation	Pink® Partition 50mm 11kg/m³ R1.2	Report Day Design 3094-4
64 steel	103	45 (39)	52 (43)	
70 timber	109	43 (37)	46 (41)	

XRP6

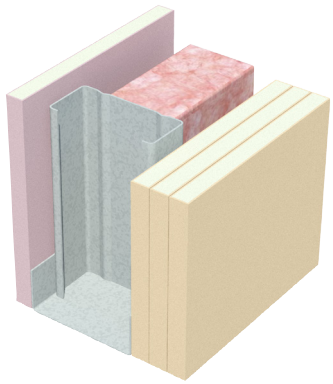

- 1 layer of 13mm **fire**shield
- Steel or timber stud framing at 600mm maximum centres
- 3 layers of 13mm GIB **x-block**®

Fire Resistance Level

-/60/60
rated from both sides

Report
FAR 2320

Stud Depth (mm)	Width (mm)	Airborne Sound Insulation Rw (Rw + Ctr)		
		No insulation	Pink® Partition 50mm 11kg/m³ R1.2	Report Day Design 3094-4
64 steel	116	47 (41)	55 (47)	
70 timber	124	46 (40)	49 (45)	

XRP7

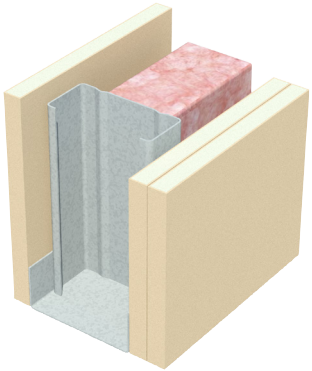

- 1 layer of 13mm GIB **x-block**®
- Steel or timber stud framing at 600mm maximum centres
- 2 layers of 13mm GIB **x-block**®

Fire Resistance Level

-/60/60
rated from both sides

Report
FAR 2320

Stud Depth (mm)	Width (mm)	Airborne Sound Insulation Rw (Rw + Ctr)		
		No insulation	Pink® Partition 50mm 11kg/m³ R1.2	Report Day Design 3094-4
64 steel	103	44 (39)	53 (46)	
70 timber	109	43 (38)	46 (42)	

XRP4

- [Option 1] Timber or steel ceiling joists
- [Option 2] Clips and Furring Channel
- [Option 3] Suspended Top Cross Rail and Furring Channel
- 2 layers of 13mm GIB **x-block**®

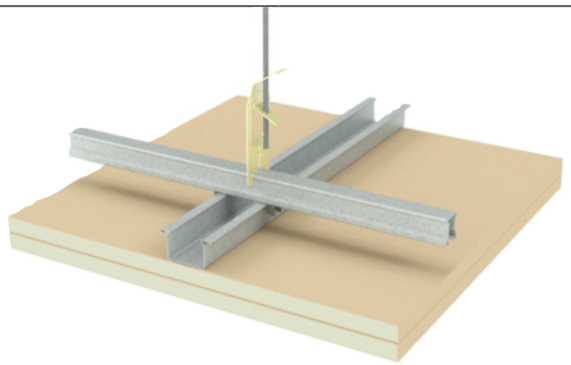

Maximum Framing Centres (mm)	Airborne Sound Insulation Rw (Rw + Ctr)	
600	35 (33)	Report Day Design 3094-4

Radiation Test Results

Table 1 Lead Equivalence in (mm)

13mm GIB x-block® Lead Equivalence measured in mm				
X-Ray Energy (kVp)	**1 layer**	**2 layers**	**3 layers**	**4 layers**
80	0.8	1.6	2.4	- *
100	0.75	1.5	2.25	2.9
125	0.5	1.0	1.4	1.9
150	0.4	0.7	1.0	1.3

1. Uncertainties ± 0.1mm
2. National Radiation Laboratory Reports 24062003/1, 24062008, 20022009.
3. *Quote from Report 20022009: 'Determination of lead equivalence for 4 layers of x-block Plasterboard at 80kVp was not feasible owing to the extremely low transmission of the X-rays through this sample thickness'.
4. kVp - kilovolts peak. Maximum voltage applied across the X-ray tube. The kVp controls the maximum energy of the emitted X-rays.

Table 2 Lead Equivalence in (kg/m²)

13mm GIB x-block® Lead Equivalence measured in kg/m²				
X-Ray Energy (kVp)	**1 layer**	**2 layers**	**3 layers**	**4 layers**
80	9.1	18.1	27.2	-
100	8.5	17.0	25.5	32.9
125	5.7	11.3	15.9	21.5
150	4.5	7.9	12.5	14.7

1. Calculated using the density of lead as 11340 kg/m³

X-Ray Resistance Energy Levels

X-Ray radiation is measured in kilovolts peak (kVp). Depending on the type of radiation equipment used in the room, diagnostic facilities will have different requirements for shielding:

- CT 120-140 kVp
- General radiographic rooms 60-90 kVp
- Dental 60-80 kVp
- Mammography 25-35 kVp

General Requirements

	Non-fire Rated	Fire Rated
Install control joints in plasterboard walls at: > 12m maximum intervals > At all control joints in the structure > At any change in the substrate	✓	✓
Use GIB **x-block**® jointing compound: > In the gap between the sheets > To fill the recessed joints on every layer > As the bedding coat with paper tape and as the second coat for the face layer. For the finish coat use masta**line** or masta**lite**. > To fill any other gaps and to cover all face layer fastener heads.	✓	✓
Treat all penetrations as shown in the construction details to maintain radiation protection or use lead of the appropriate thickness.	✓	✓
Use approved fire rated penetration details. Fire penetrations may require fire collars or other devices to maintain fire performance.		✓
Attach all fixtures to studs or purpose installed noggings. Wall anchors must not be fixed only to the plasterboard of fire rated walls.		✓

For acceptable modifications or variations to fire rated systems, refer to Section 2.3 Fire Resistance

Framing

	Non-fire Rated	Fire Rated
Use steel or timber framing.	✓	✓
Framing members as per framing table or structural design up to 600mm maximum.	✓	✓

> Noggings are permitted to assist the fixing of services.
> Plumbing and electrical services must not protrude beyond the face of the studs.

Plasterboard Layout

	Non-fire Rated	Fire Rated
Vertical Layout		
Sit GIB **x-block**® directly on the floor, leave no gap at the base of the sheet.	✓	✓
All recessed and butt joints must be backed by a framing member.	✓	✓
Leave a gap of 2mm between GIB **x-block**® sheets to allow GIB **x-block**® jointing compound to fill any gaps between and behind the sheets. [Figure 1]	✓	✓
Vertical joints must be 200mm minimum from the edge of any opening such as windows and doorways to minimise cracking at the joints.	✓	✓
Stagger recessed edges by 300mm minimum between layers and on opposite sides of the wall.	✓	✓
Stagger butt joints by 300mm minimum on adjoining sheets, between layers and on opposite sides of the wall.	✓	✓

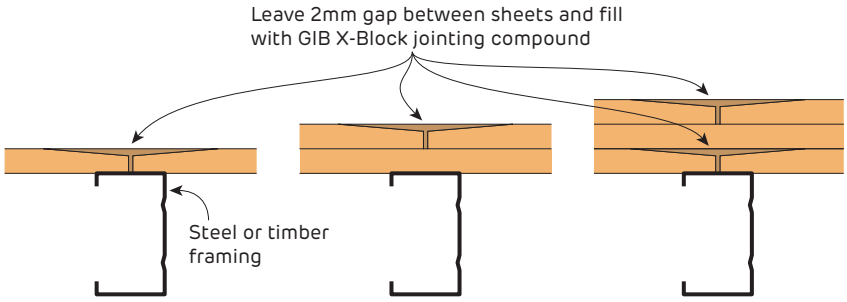

FIGURE 1 X-Block Jointing
Plan

Plasterboard Fixing

	Non-fire Rated	Fire Rated
Drive screws to just below the sheet surface, taking care not to break the paper linerboard. For over-driven screws, install another screw 20mm away. Leave or remove the over-driven screw and patch.	✓	✓
Use the 'Screw Only Method'.	✓	✓

Screw Type and Minimum Size for the Installation of Plasterboard to Steel

Plasterboard Thickness	1st Layer	2nd Layer	3rd Layer
13mm	6g x 25mm screw	6g x 41mm screw *	7g x 57mm screw *

For steel ≤ 0.75mm BMT, use fine thread needle point screws.
For steel ≥ 0.75mm BMT, use fine thread drill point screws.
*10g x 38mm Laminating screws may be used as detailed in installation diagrams.

Fastener Type and Minimum Size for the Installation of Plasterboard to Timber

Plasterboard Thickness	1st Layer	2nd Layer	3rd Layer
13mm	6g x 32mm screw	8g x 45mm screw	8g x 65mm screw

FIGURE 2 Fire Rated 1 Layer - Vertical
Screw Only Method

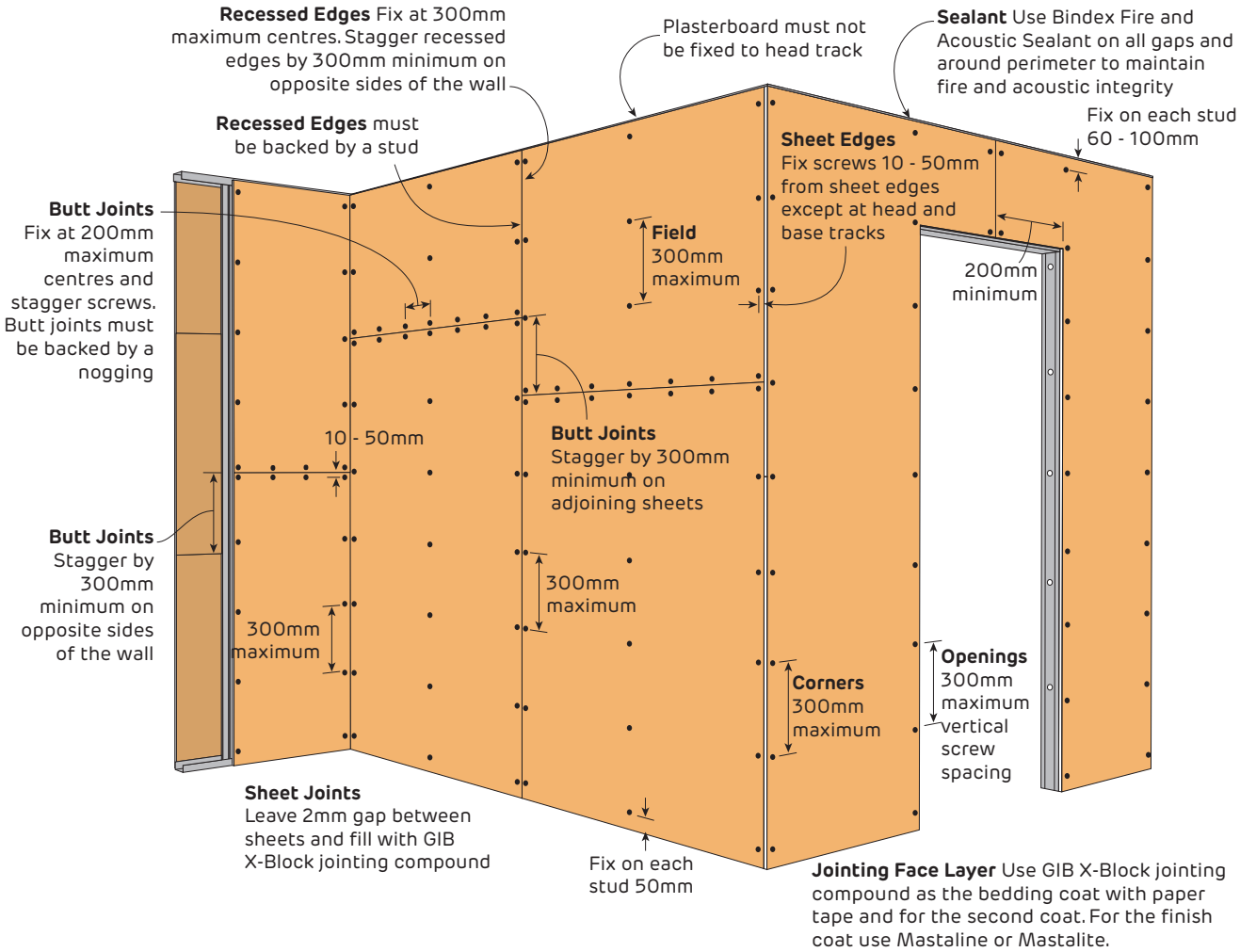

Maximum Ultimate Limit State Wind Load Table (kPa)

Plasterboard Thickness	Maximum Wall Stud Spacing			
	600mm	450mm	400mm	300mm
13mm	0.85	1.15	1.30	1.70

1. Calculations do not include the framing which must be independently designed to suit the desired loads.
2. If higher internal wind pressures are expected, please contact Siniat for specific design.

FIGURE 3 Fire Rated 2 Layers - Vertical + Vertical
Screw Only Method

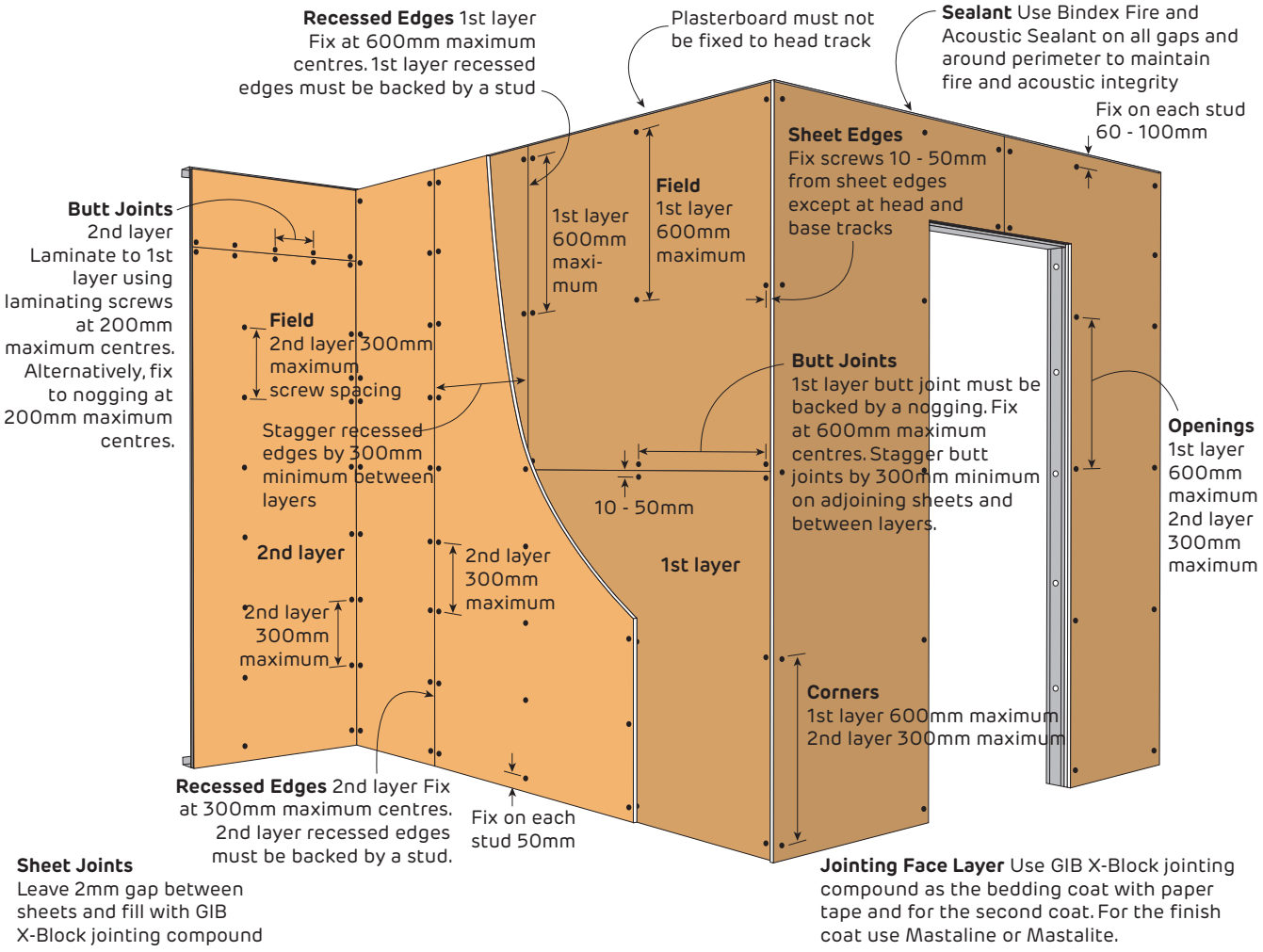

Maximum Ultimate Limit State Wind Load Table (kPa)

Plasterboard Thickness	Maximum Wall Stud Spacing			
	600mm	450mm	400mm	300mm
13mm	0.85	1.15	1.30	1.70

1. Calculations do not include the framing which must be independently designed to suit the desired loads.
2. If higher internal wind pressures are expected, please contact Siniat for specific design.

FIGURE 4 Fire Rated 3 Layers - Vertical + Vertical + Vertical
Screw Only Method

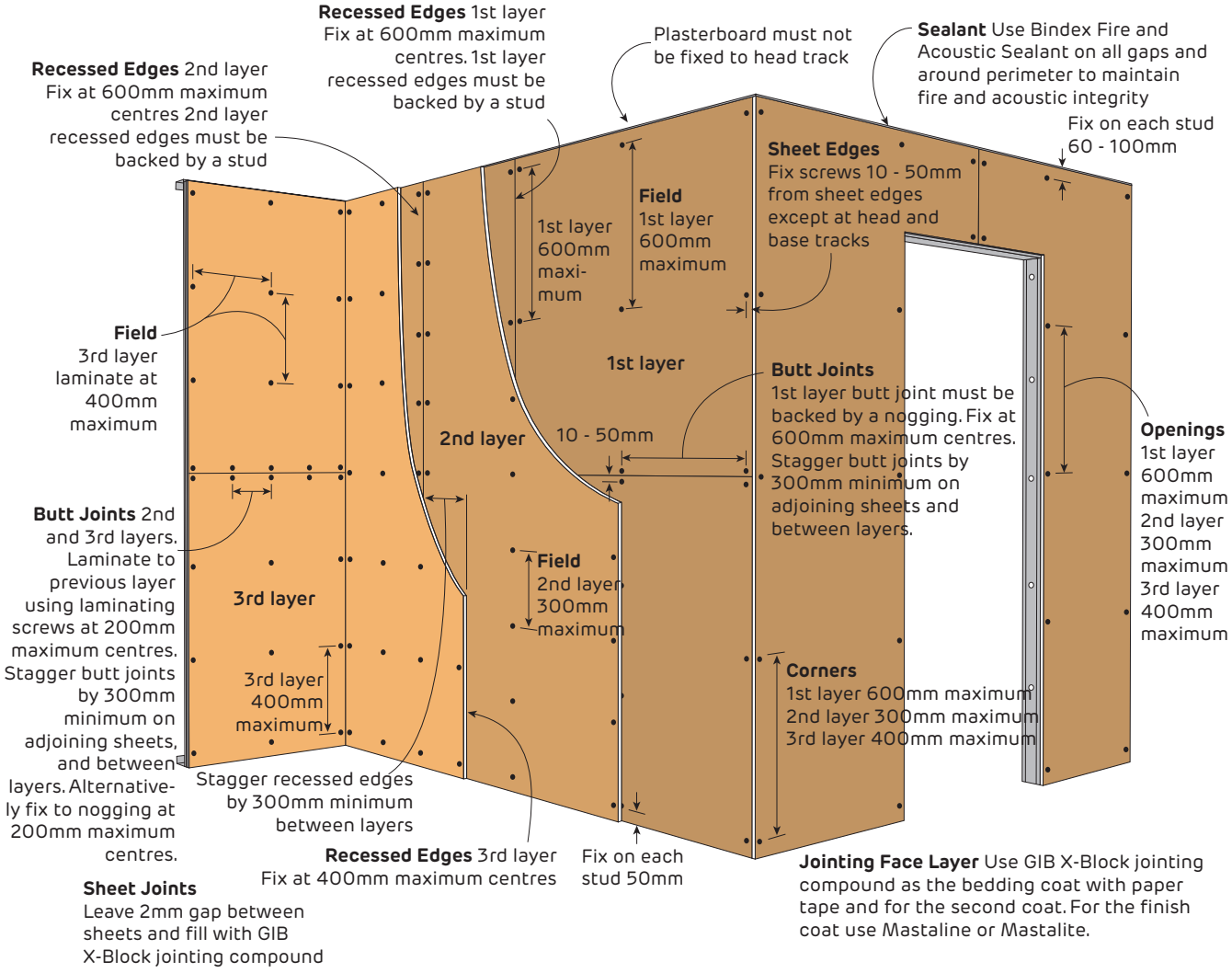

Maximum Ultimate Limit State Wind Load Table (kPa)

Plasterboard Thickness	Maximum Wall Stud Spacing			
	600mm	450mm	400mm	300mm
13mm	0.85	1.15	1.30	1.70

1. Calculations do not include the framing which must be independently designed to suit the desired loads.
2. If higher internal wind pressures are expected, please contact Siniat for specific design.

FIGURE 5 Fire Rated - 2 Layers
Screw Only Method

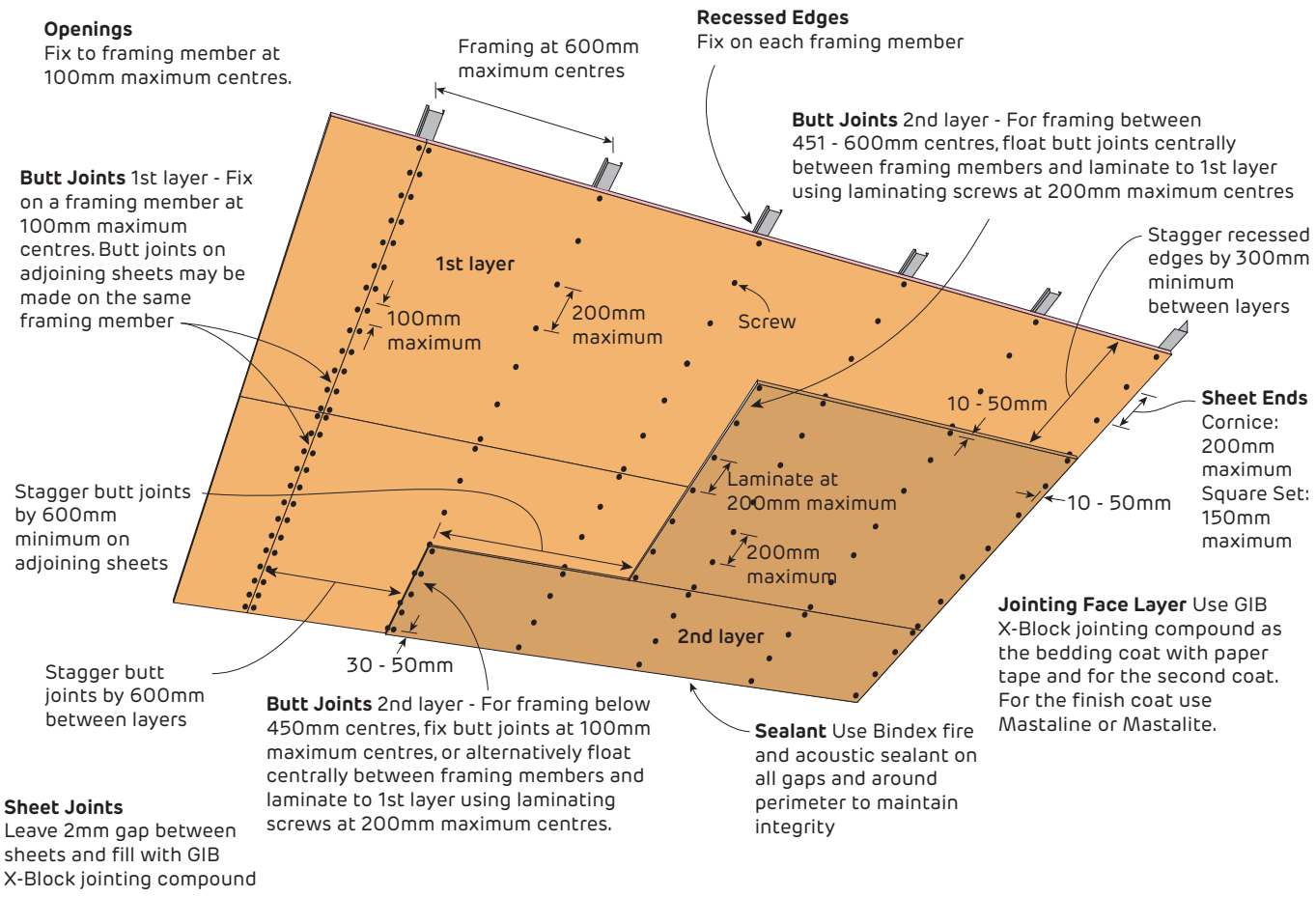

Fixing Pattern Table

Sheet Width	Screw Fixing Pattern
600mm	S S S S (4)
900mm	S S S S S S (6)
1200mm	S S S S S S S (7)
1350mm	S S S S S S S S (8)

S = One screw

Maximum Ultimate Limit State Wind Load Table (kPa)

Plasterboard Thickness	Maximum Ceiling Frame Spacing			
	600mm	450mm	400mm	300mm
13mm	1.15	1.60	1.80	2.45

1. Calculations do not include the framing which must be independently designed to suit the desired load.
2. Calculations include a ceiling insulation with maximum weight of 2.5 kg/m2 (equivalent to R5.0 Pink® Batts Ceiling insulation).
3. If higher internal wind pressures are expected, please contact Siniat for specific design.

Non-Fire Rated

X-Ray Protection Details - Systems XRP1 and XRP5 only

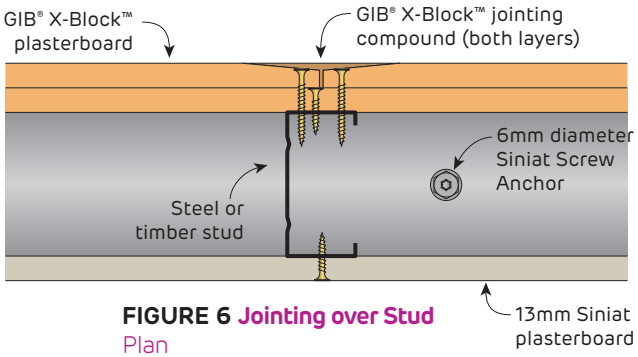

FIGURE 6 Jointing over Stud
Plan

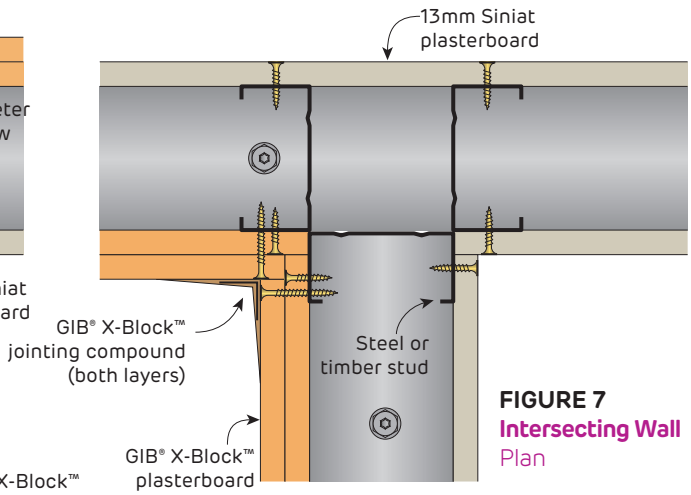

FIGURE 7 Intersecting Wall
Plan

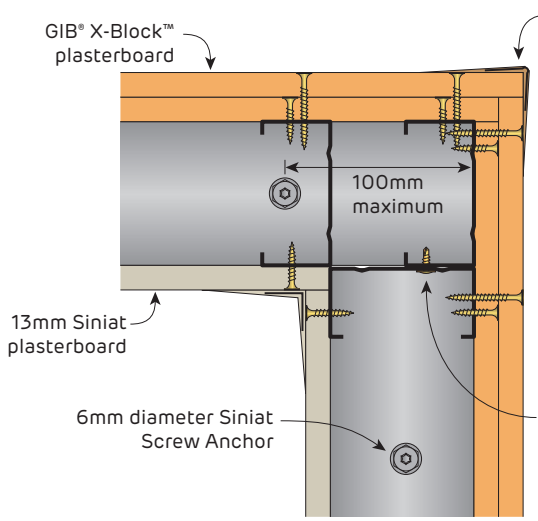

FIGURE 8 Wall Corner
Plan

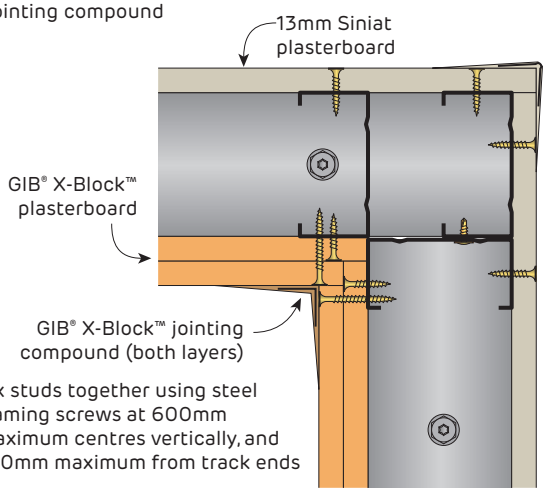

FIGURE 9 Wall Corner
Plan

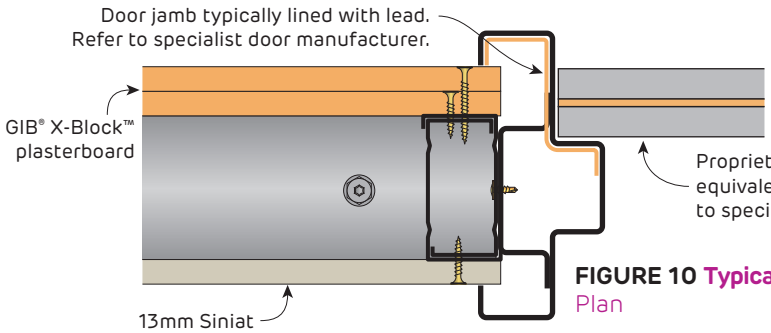

FIGURE 10 Typical Door Jamb
Plan

Fill any gaps with GIB® X-Block™ jointing compound

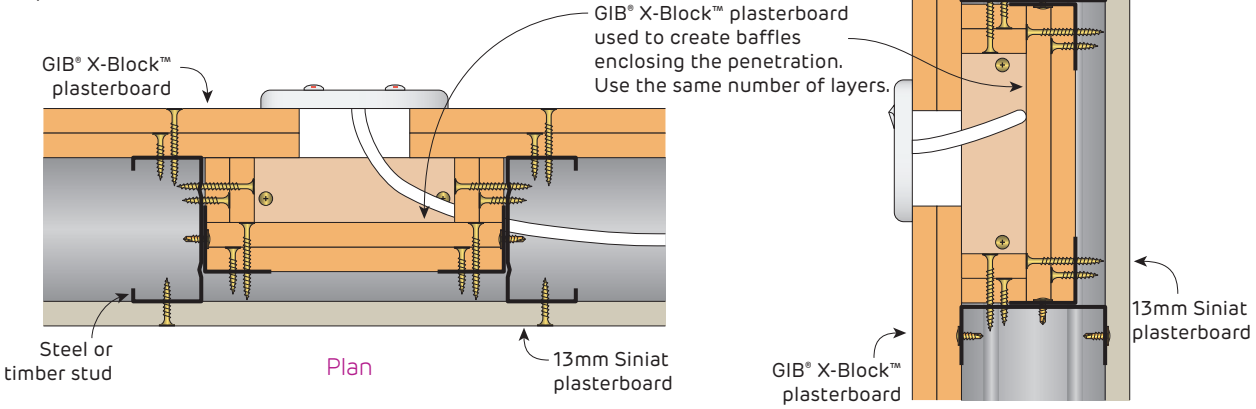

FIGURE 11 GPO Penetration

Non-Fire Rated
X-Ray Protection Details - Systems XRP2 only

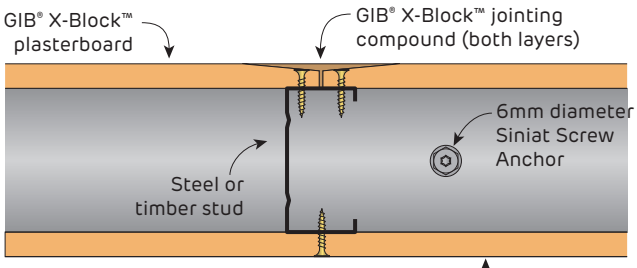

FIGURE 12 Jointing over Stud
Plan

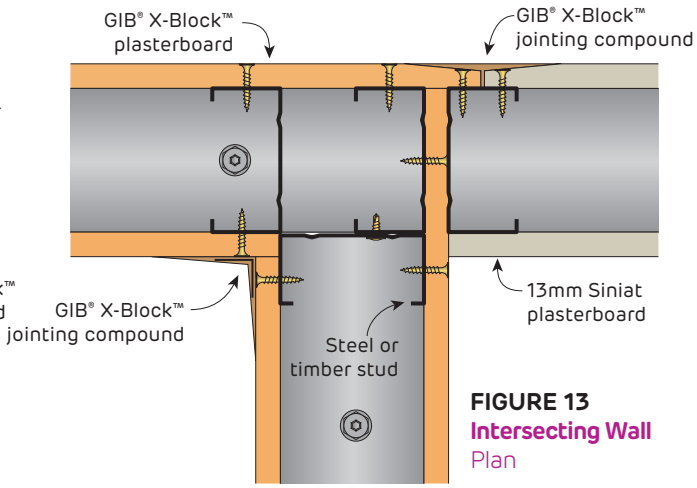

FIGURE 13 Intersecting Wall
Plan

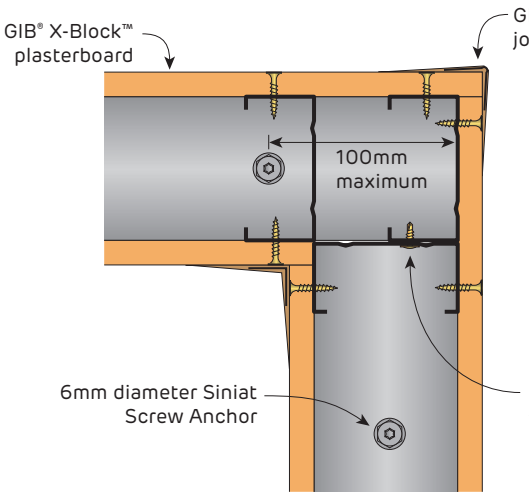

FIGURE 14 Wall Corner
Plan

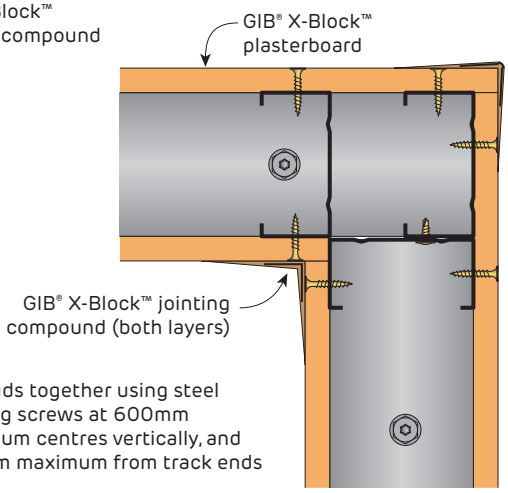

FIGURE 15 Wall Corner
Plan

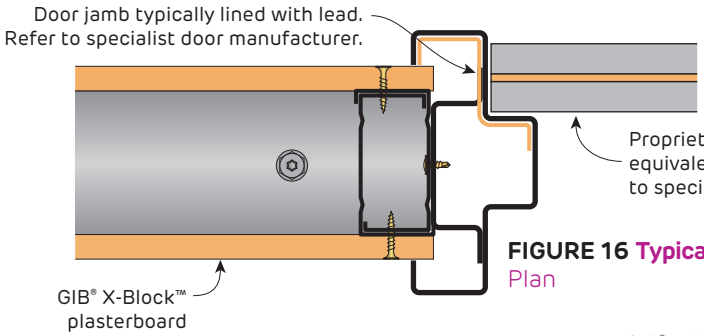

FIGURE 16 Typical Door Jamb
Plan

Fill any gaps with GIB® X-Block™ jointing compound

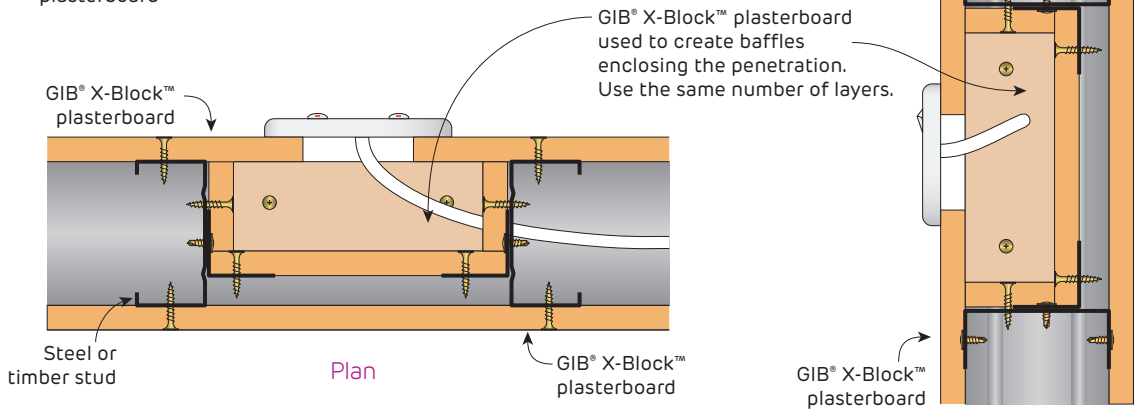

FIGURE 17 GPO Penetration

Non-Fire Rated

X-Ray Protection Details - Systems XRP3 and XRP6 only

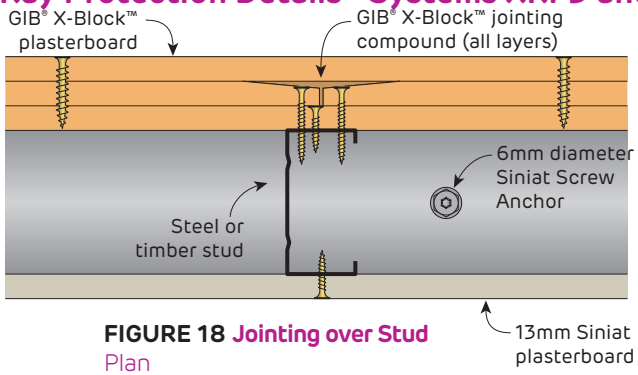

FIGURE 18 Jointing over Stud
Plan

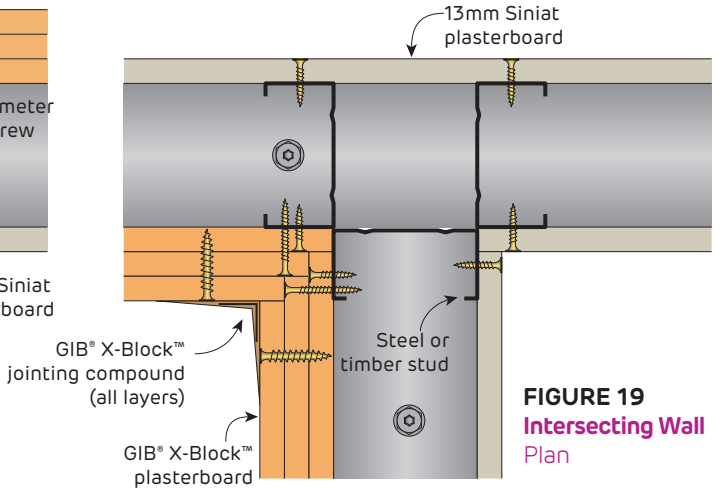

FIGURE 19 Intersecting Wall
Plan

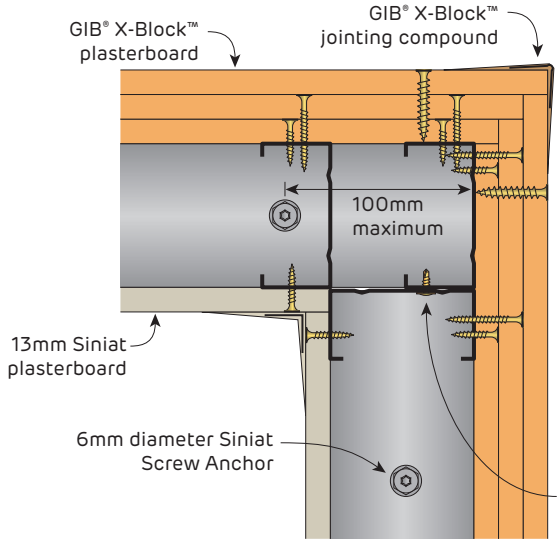

FIGURE 20 Wall Corner
Plan

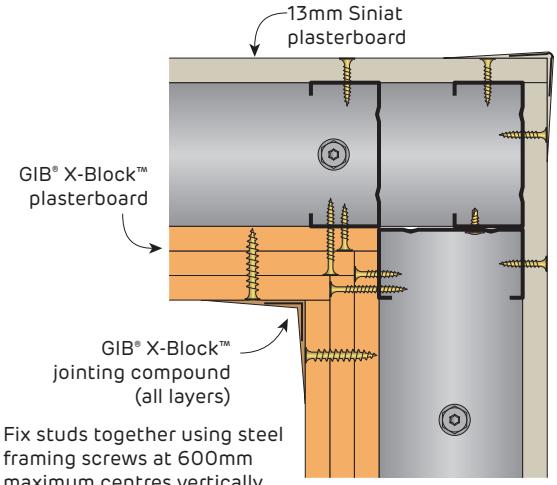

FIGURE 21 Wall Corner
Plan

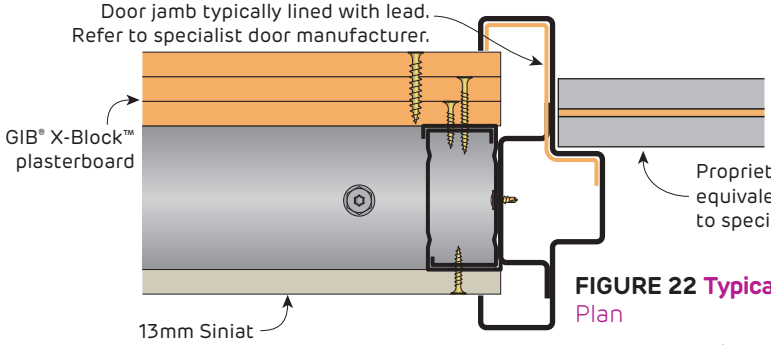

FIGURE 22 Typical Door Jamb
Plan

Fill any gaps with GIB® X-Block™ jointing compound

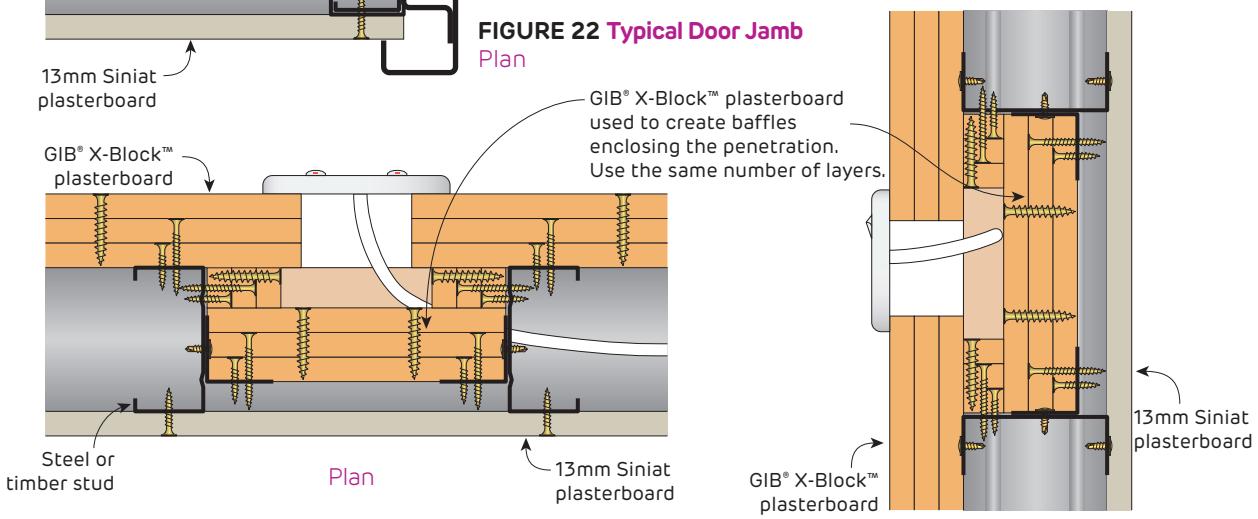

FIGURE 23 GPO Penetration

Fire Rated

X-Ray Protection Details - Systems XRP7 only

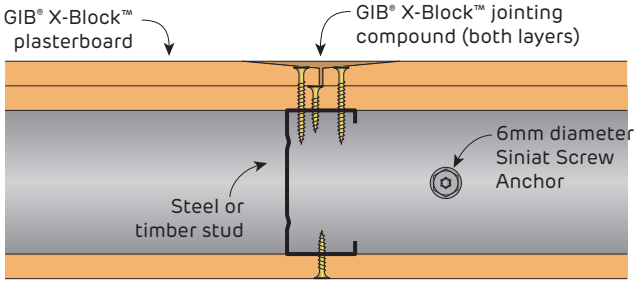

FIGURE 24 Jointing over Stud
Plan

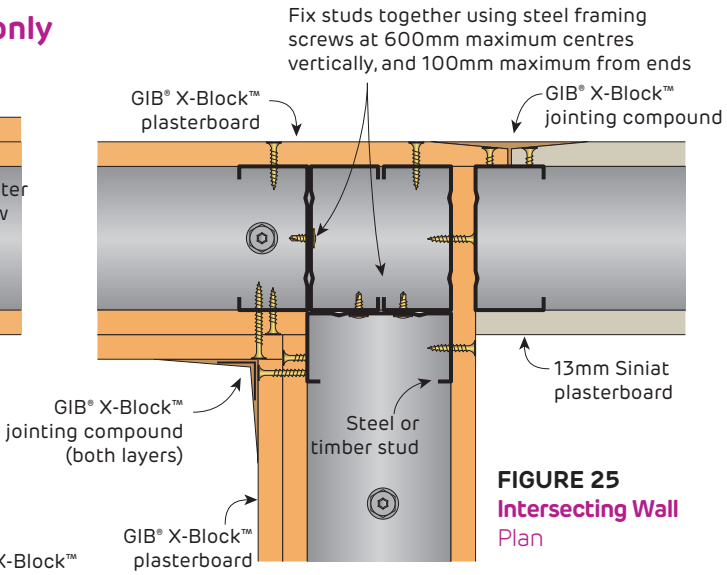

FIGURE 25 Intersecting Wall
Plan

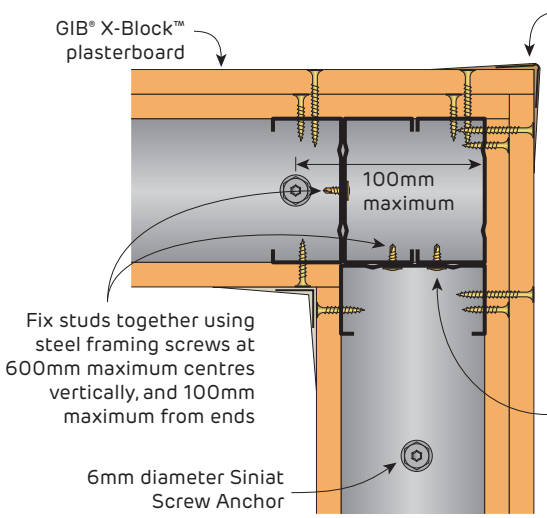

FIGURE 26 Wall Corner
Plan

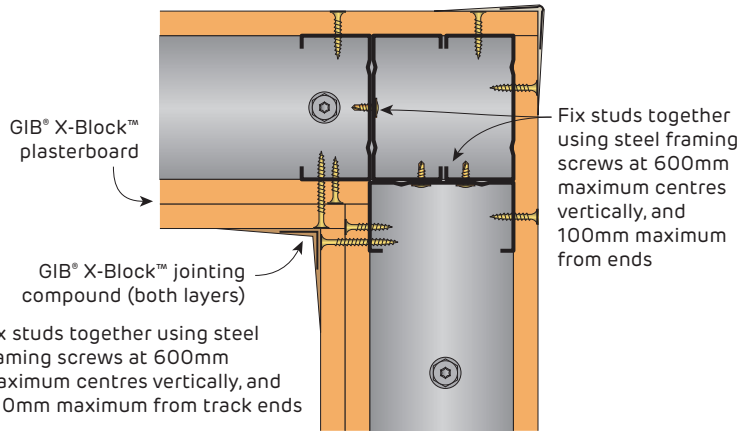

FIGURE 27 Wall Corner
Plan

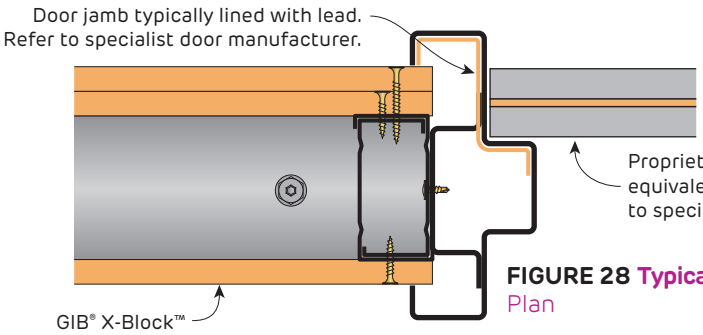

FIGURE 28 Typical Door Jamb
Plan

Fill any gaps with GIB® X-Block™ jointing compound

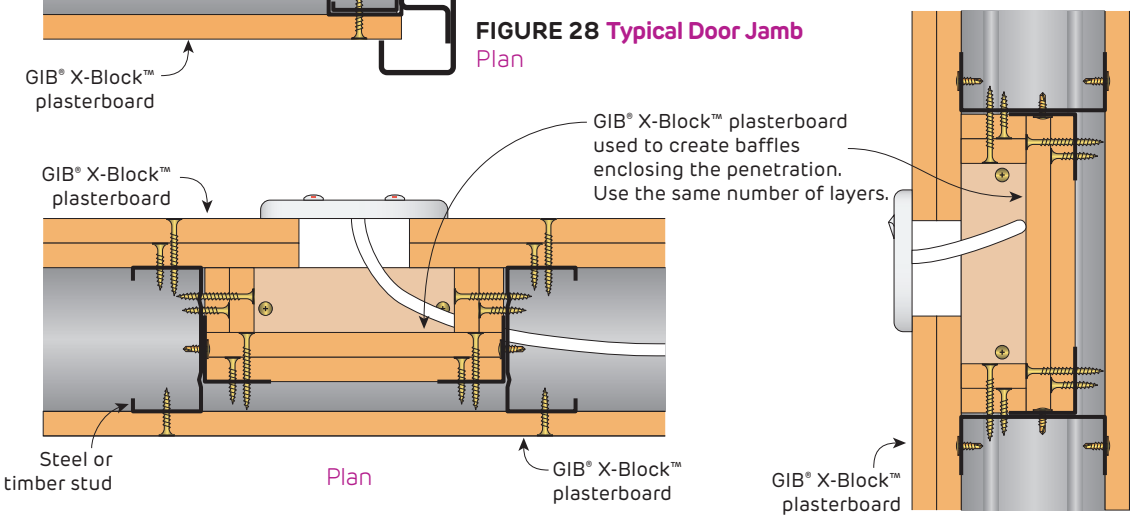

Plan

Section

FIGURE 29 GPO Penetration

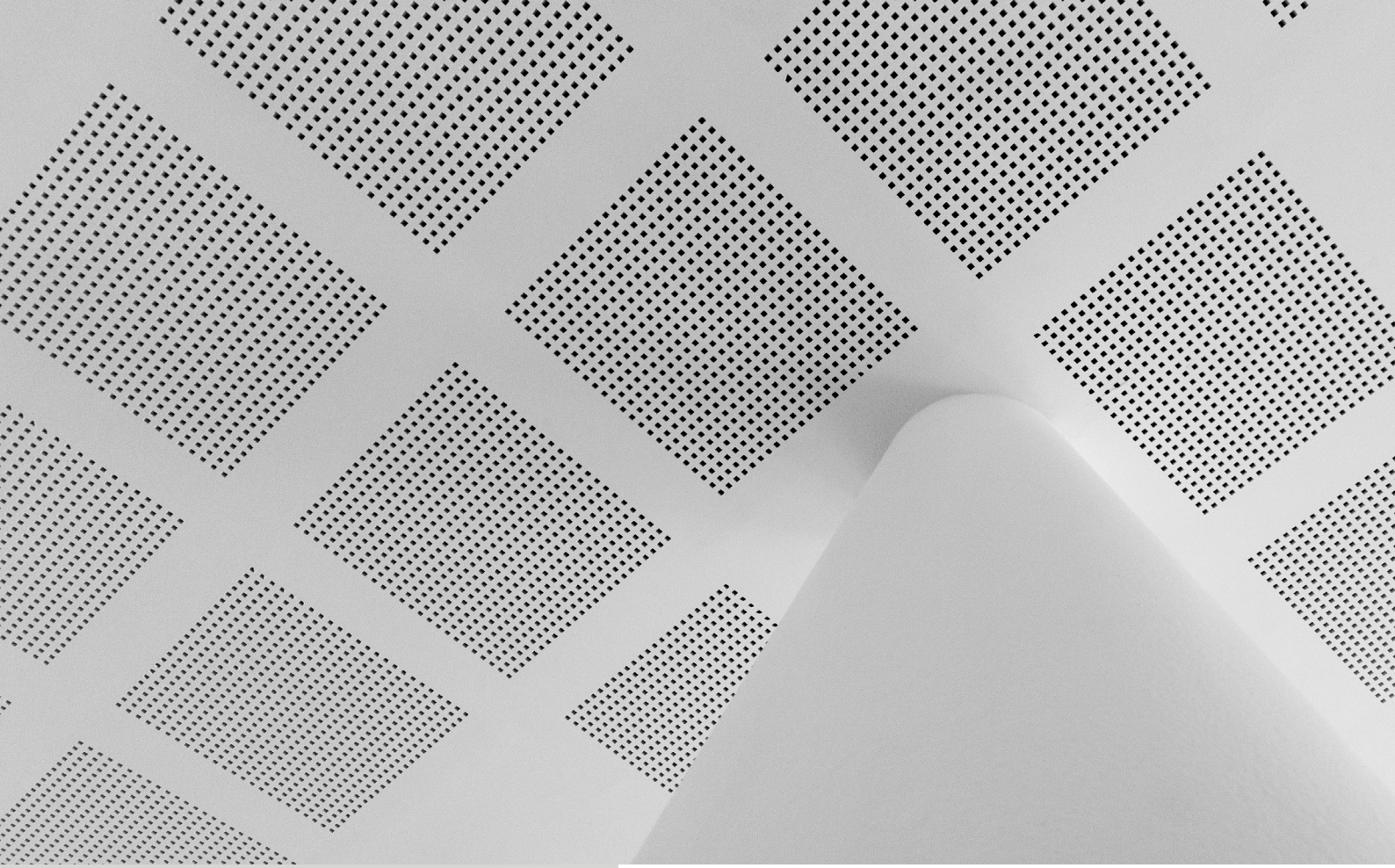

SYSTEMS	**660**
INSTALLATION	**662**
GENERAL REQUIREMENTS	662
FRAMING	662
LAYOUT	672
FIXING	674
CURVING	675
FINISHING	676
CONSTRUCTION DETAILS	**677**

6.7 Creason Perforated Plasterboard

creason is part of Siniat's range of acoustic perforated plasterboard. creason offers not only great acoustic performance with beautiful aesthetics, but now also offers air cleaning properties with inbuilt CAPT'AIR® technology.

It is ideal for use in a range of internal applications where controlling the sound reverberation time is required for large open areas such as offices, shopping centres, airports, schools, hospitals, conference halls, lecture theatres and libraries. creason can also be installed in residential ceilings to provide noise absorption in open plan living areas and home theatres. If creason is to be used on walls, we recommend installing above trafficable areas.

The acoustic performance of creason is achieved through a combination of sound diffusion, where reflected sound is dispersed and by sound absorption, whereby sound travels through the perforation holes and acoustic fleece backing. The result is a high quality sound experience with excellent speech intelligibility. Additional optional insulation improves the sound absorption.

The creason range is installed like regular plasterboard.

Round R12/25 No.8

12mm diameter circles with dark backing fleece

Open Area: 10.2 %

Nominal Sheet Dimensions: 12.5 x 1200 x 2400mm

Actual Sheet Dimensions: 12.5 x 1197 x 2397mm

Weight: 10 kg/m² (approximate)

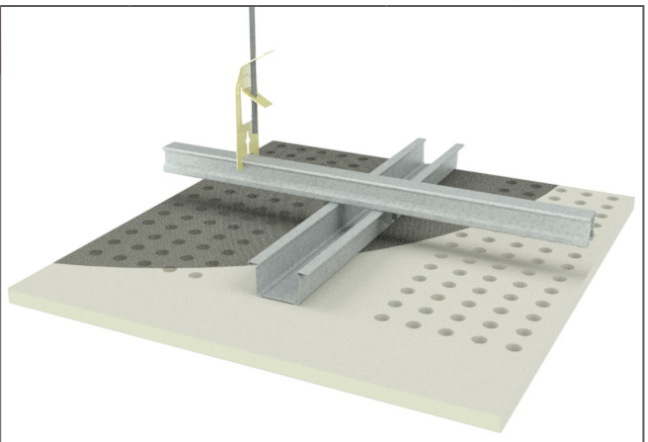

	Ceiling Cavity (mm)	α_p - Frequency (Hz)						α_w	NRC
		125	250	500	1000	2000	4000		
No Insulation	187	0.4	0.7	0.65	0.55	0.45	0.4	**0.5**	**0.6**
Pink® Partition 75mm 14kg/m³ R1.9	187	0.55	0.7	0.65	0.55	0.5	0.45	**0.55**	**0.6**

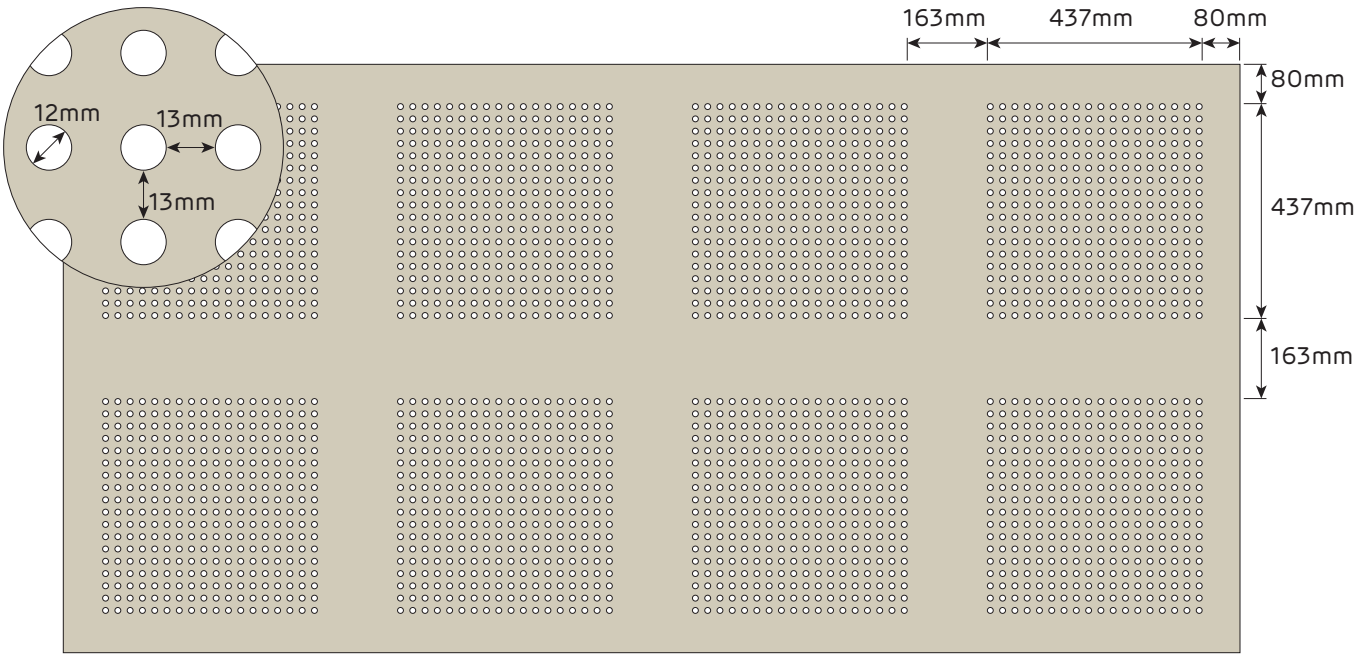

Cube C12/25 No.8

12 x 12mm squares with dark backing fleece

Open Area: 16.1 %

Nominal Sheet Dimensions: 12.5 x 1200 x 2400mm

Actual Sheet Dimensions: 12.5 x 1197 x 2397mm

Weight: 10 kg/m² (approximate)

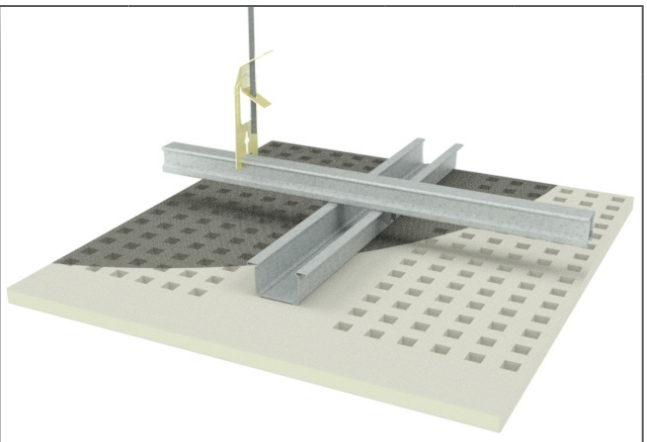

	Ceiling Cavity (mm)	α_p - Frequency (Hz)						α_w	NRC
		125	250	500	1000	2000	4000		
No Insulation	47	0.15	0.45	0.75	0.8	0.6	0.45	**0.6**	**0.65**
	187	0.45	0.75	0.8	0.65	0.55	0.5	**0.6**	**0.7**
Pink® Partition 75mm 14kg/m³ R1.9	47	0.4	0.75	0.9	0.8	0.65	0.55	**0.7**	**0.8**
	187	0.6	0.85	0.8	0.75	0.7	0.65	**0.75**	**0.8**
	587	0.7	0.75	0.8	0.7	0.6	0.6	**0.7**	**0.7**

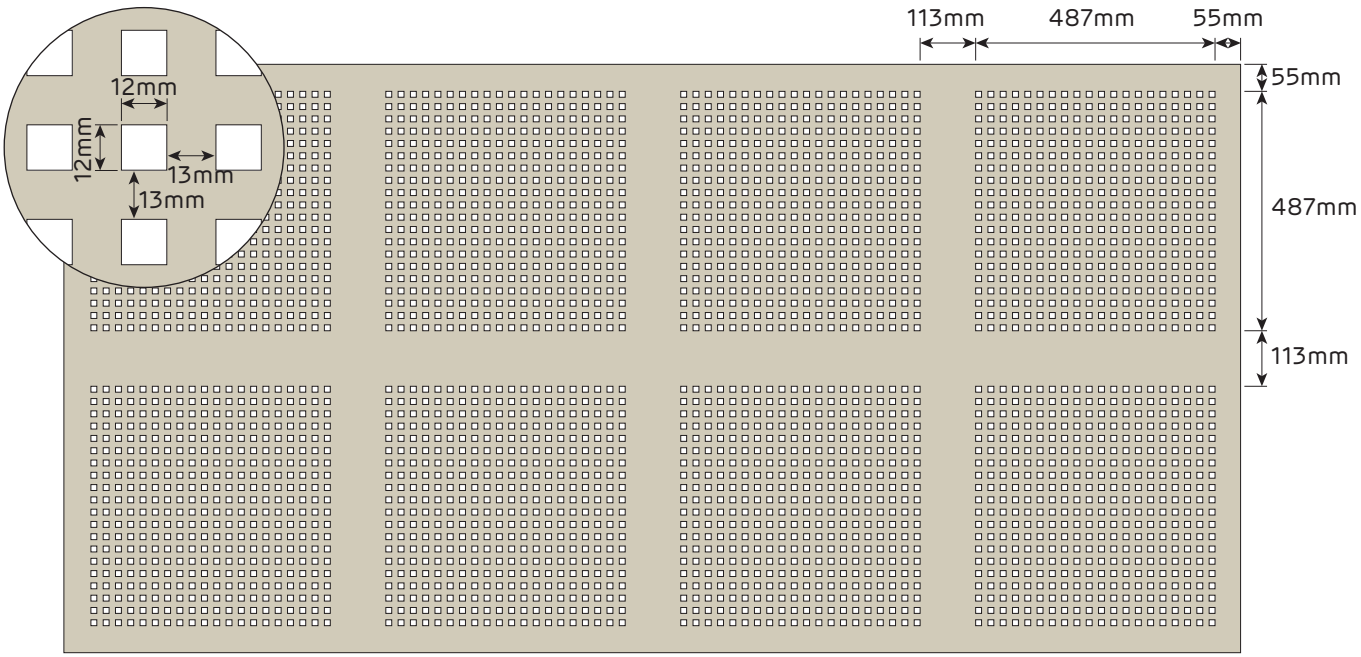

General Requirements

Install control joints in plasterboard ceilings: > At 12m maximum intervals > At all control joints in the structure > At any change in the substrate > At the junction of a large room and passageway. Separate creason ceilings from other building elements, such as walls and columns by creating control joints that allow for movement, e.g. utilising a shadow line profile or tear away bead.
All ceilings in this section are non-trafficable. Do not walk on plasterboard ceilings!
Limit dead loads on plasterboard ceilings to 2 kg/m^2 for plasterboard spanning 600mm framing centres.
Limit dead loads on plasterboard ceilings to 2.5 kg/m^2 for plasterboard spanning 450mm framing centres.
Attach ceiling fixtures to framing members only. Ensure the framing is designed to carry any additional load.

> creason must have an air cavity behind it for it to perform as a sound absorber.

> Plasterboard installations in close proximity to metal roofs (i.e. raked ceiling or with small ceiling cavities) require smaller control joint intervals or joints left unfilled as they are exposed to larger rates of thermal expansion and contraction of the roof and/or ceiling framing otherwise cracking of the ceiling and joint peaking is expected.

> Excessive vibration of the ceiling (by the installation of ceiling services, etc) is known to cause jointing cracking and joint peaking.

> Locate ceiling services so they do not cut through ceiling framing members, otherwise some degradation of the ceiling can be expected

Use the Siniat Reverberation time calculator to assist in determining how much of the ceiling and or wall area should be covered. Alternatively involve an acoustic consultant, especially for very high ceilings and unusually shaped rooms such as those with domed or sloping ceilings.

Siniat Reverberation Time Calculator

Use Siniat's Reverberation Time Calculator by clicking on the link or by using your phone's camera on the QR code.

Framing

Framing members as per framing tables or structural design up to 600mm maximum. Also refer to Section 5.1 for more information on ceiling framing.
For a specific project, determine the relevant wind pressure load on an internal ceiling from Section 2.3, or the QR link below in the Span Tables section. Wind pressure loads must be considered for internal ceilings to comply with *AS/NZS 1170.2 Wind Actions* and *AS/NZS 2785 Suspended Ceilings - Design and Installation.*
Contact Siniat or a structural engineer to check ceiling for earthquake actions. Specific project information is required.
Stagger joins in adjacent Top Cross Rails and Furring Channels by 1200mm minimum.
Install additional framing members around openings.

Non-Fire Rated
Internal Direct Fix Ceiling Frames

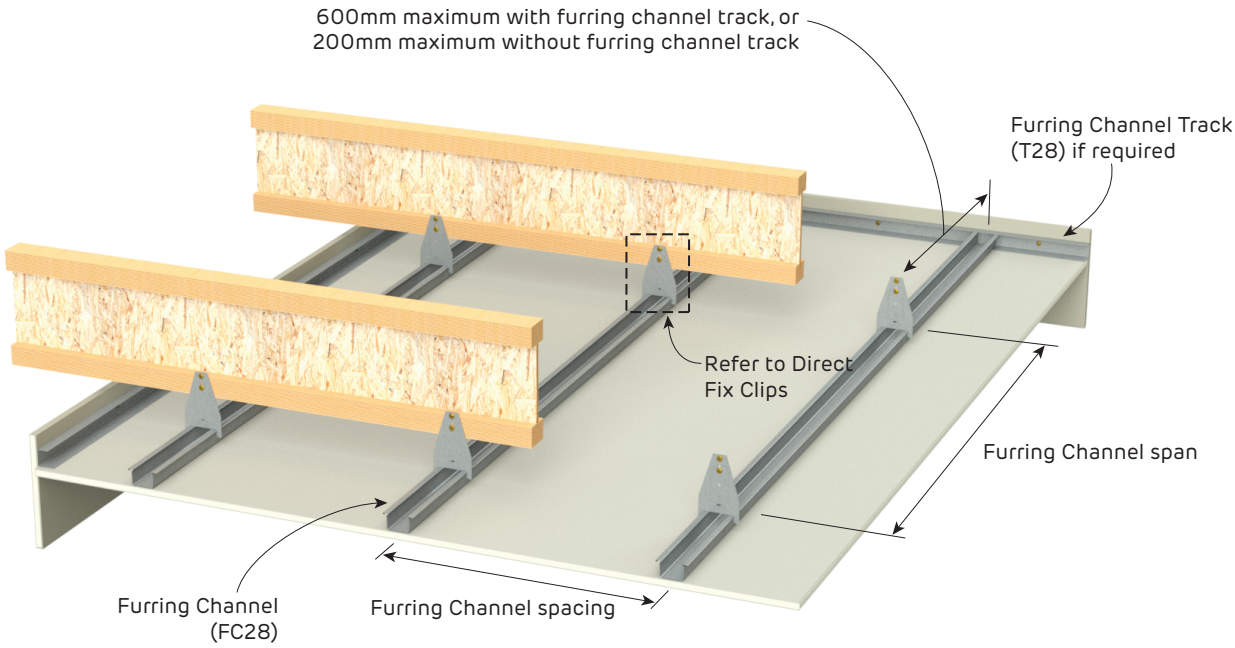

FIGURE 1 Direct Fix Furring Channel Ceiling Frame
Perspective

Non-Fire Rated
Details for Single Span, Double Span or 3-or-More Span Ceilings

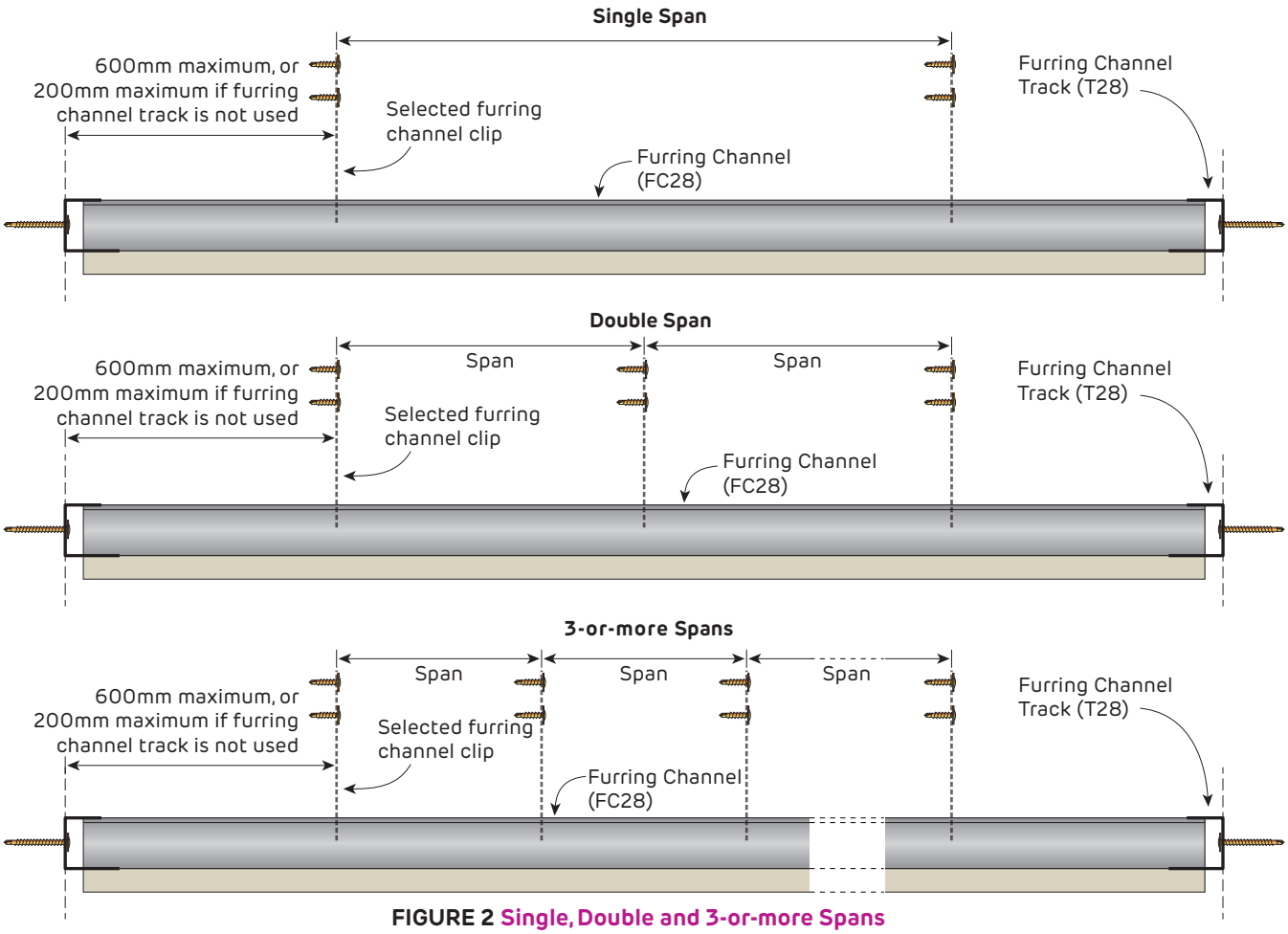

FIGURE 2 Single, Double and 3-or-more Spans
Section

Non-Fire Rated
Typical Direct Fix Clips

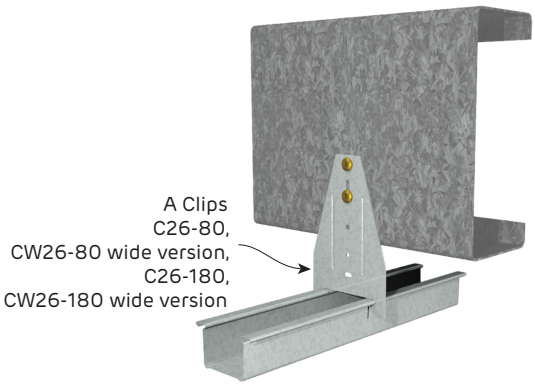

FIGURE 3 A Clip and Furring Channel
Perspective

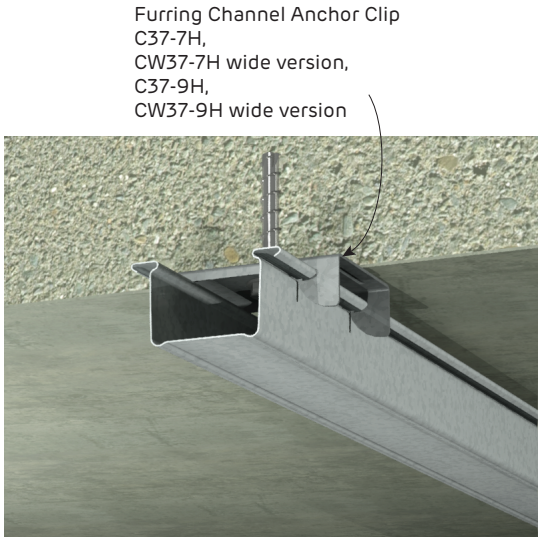

FIGURE 4 Anchor Clip and Furring Channel
Perspective

Direct fixing clips may generate noise when fixed to materials subject to daily thermal expansion and contraction

Table 1 28mm Furring Channel Ceiling Span Table - REGION A

Refer to Section 2.3 for assistance determining the relevant wind pressures for a specific project.

28mm Furring Channel (AFC28) Ceiling Span Table	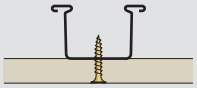	Up to BCA Building Importance Level 3	Ultimate pressure W_U (kPa)	0.39
			Serviceability pressure W_S (kPa)	0.25

Ceiling Lining	Furring Channel Spacing (mm)	Single Span		Double Span		3-or-more Spans	
		Span (mm)	Connection Demand (kN)	Spans (mm)	Connection Demand (kN)	Spans (mm)	Connection Demand (kN)
1 layer of 12.5mm Creason	600	1180	0.21	1580	0.72	1460	0.60
	400	1350	0.16	1810	0.55	1670	0.46
	300	1480	0.13	1990	0.45	1840	0.38

Table 2 28mm Furring Channel Ceiling Span Table - REGION A

Refer to Section 2.3 for assistance determining the relevant wind pressures for a specific project.

28mm Furring Channel (AFC28) Ceiling Span Table	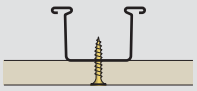	Up to BCA Building Importance Level 3	Ultimate pressure W_U (kPa)	0.46
			Serviceability pressure W_S (kPa)	0.3

Ceiling Lining	Furring Channel Spacing (mm)	Single Span		Double Span		3-or-more Spans	
		Span (mm)	Connection Demand (kN)	Spans (mm)	Connection Demand (kN)	Spans (mm)	Connection Demand (kN)
1 layer of 12.5mm Creason	600	1110	0.22	1490	0.75	1370	0.63
	400	1270	0.17	1700	0.57	1570	0.48
	300	1400	0.14	1870	0.47	1730	0.40

1. Table based upon downward (suction) and upward (uplift) pressures, intended for internal use only.
2. Table includes self weight and 1 kg/m² insulation weight with an additional 3 kg/m² service load. No further allowance for additional point loads or live loads.
3. Contact Siniat or a structural engineer to check ceiling for earthquake actions. Specific project information is required.
4. Table refers to Siniat Furring Channel of Base Metal Thickness (BMT) 0.42mm of grade G550 steel with Zincalume™ AM150 corrosion protection. Maximum production lengths available are 6.0m
5. Designed in accordance with *AS/NZS 4600:2018 Cold Formed Steel Structures* and *AS/NZS 2785:2020 Suspended Ceilings - Design and Installation.*
6. Wind pressures determined in accordance with *AS/NZS 1170.2 Wind Actions.*
7. Connections to clips must be checked with the *Clip Capacity Table.*
8. Ultimate Limit State Load Case 1: 1.2G + Wu (Suction) + $Q_{0.03kPa\ Service\ Load}$
   Ultimate Limit State Load Case 2: 0.9G + Wu (Uplift).
9. Serviceability Limit State Load Case 1: G, with deflection limited to Span/500.
   Serviceability Limit State Load Case 2: Ws, with deflection limited to Span/360.
10. Perimeter anchors at 600mm maximum centres and 100mm maximum from track ends with minimum 0.7 kN shear capacity.
11. The nominated lateral pressures and deflection limits must be checked for suitability for a specific project.
12. For BCA Building Importance Level 4, please contact Siniat.

Siniat Internal Wind Load Calculator

Refer to Section 2.3 for assistance determining the relevant internal wind pressures for a specific project. Or use the Siniat Internal Wind Load Calculator by clicking on the link or by using your phone's camera on the QR code.

Table 3 28mm Furring Channel Ceiling Span Table - REGION B

Refer to Section 2.3 for assistance determining the relevant wind pressures for a specific project.

28mm Furring Channel (AFC28) Ceiling Span Table	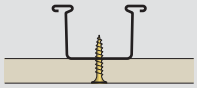	Up to BCA Building Importance Level 3	Ultimate pressure W_U (kPa)	0.59
			Serviceability pressure W_S (kPa)	0.25

Ceiling Lining	Furring Channel Spacing (mm)	Single Span		Double Span		3-or-more Spans	
		Span (mm)	Connection Demand (kN)	Spans (mm)	Connection Demand (kN)	Spans (mm)	Connection Demand (kN)
1 layer of 12.5mm Creason	600	1130	0.27	1410	0.85	1410	0.78
	400	1350	0.22	1730	0.70	1670	0.61
	300	1480	0.18	1990	0.60	1840	0.51

Table 4 28mm Furring Channel Ceiling Span Table - REGION B

Refer to Section 2.3 for assistance determining the relevant wind pressures for a specific project.

28mm Furring Channel (AFC28) Ceiling Span Table	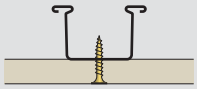	Up to BCA Building Importance Level 3	Ultimate pressure W_U (kPa)	0.71
			Serviceability pressure W_S (kPa)	0.3

Ceiling Lining	Furring Channel Spacing (mm)	Single Span		Double Span		3-or-more Spans	
		Span (mm)	Connection Demand (kN)	Spans (mm)	Connection Demand (kN)	Spans (mm)	Connection Demand (kN)
1 layer of 12.5mm Creason	600	1050	0.29	1310	0.91	1310	0.83
	400	1270	0.23	1610	0.74	1570	0.66
	300	1400	0.19	1860	0.64	1730	0.55

1. Table based upon downward (suction) and upward (uplift) pressures, intended for internal use only.
2. Table includes self weight and 1 kg/m² insulation weight with an additional 3 kg/m² service load. No further allowance for additional point loads or live loads.
3. Contact Siniat or a structural engineer to check ceiling for earthquake actions. Specific project information is required.
4. Table refers to Siniat Furring Channel of Base Metal Thickness (BMT) 0.42mm of grade G550 steel with Zincalume™ AM150 corrosion protection. Maximum production lengths available are 6.0m
5. Designed in accordance with *AS/NZS 4600:2018 Cold Formed Steel Structures* and *AS/NZS 2785:2020 Suspended Ceilings - Design and Installation.*
6. Wind pressures determined in accordance with *AS/NZS 1170.2 Wind Actions.*
7. Connections to clips must be checked with the *Clip Capacity Table.*
8. Ultimate Limit State Load Case 1: 1.2G + Wu (Suction) + $Q_{0.03kPa\ Service\ Load}$
   Ultimate Limit State Load Case 2: 0.9G + Wu (Uplift).
9. Serviceability Limit State Load Case 1: G, with deflection limited to Span/500.
   Serviceability Limit State Load Case 2: Ws, with deflection limited to Span/360.
10. Perimeter anchors at 600mm maximum centres and 100mm maximum from track ends with minimum 0.7 kN shear capacity.
11. The nominated lateral pressures and deflection limits must be checked for suitability for a specific project.
12. For BCA Building Importance Level 4, please contact Siniat.

Non-Fire Rated
Internal Suspended Ceiling Frames

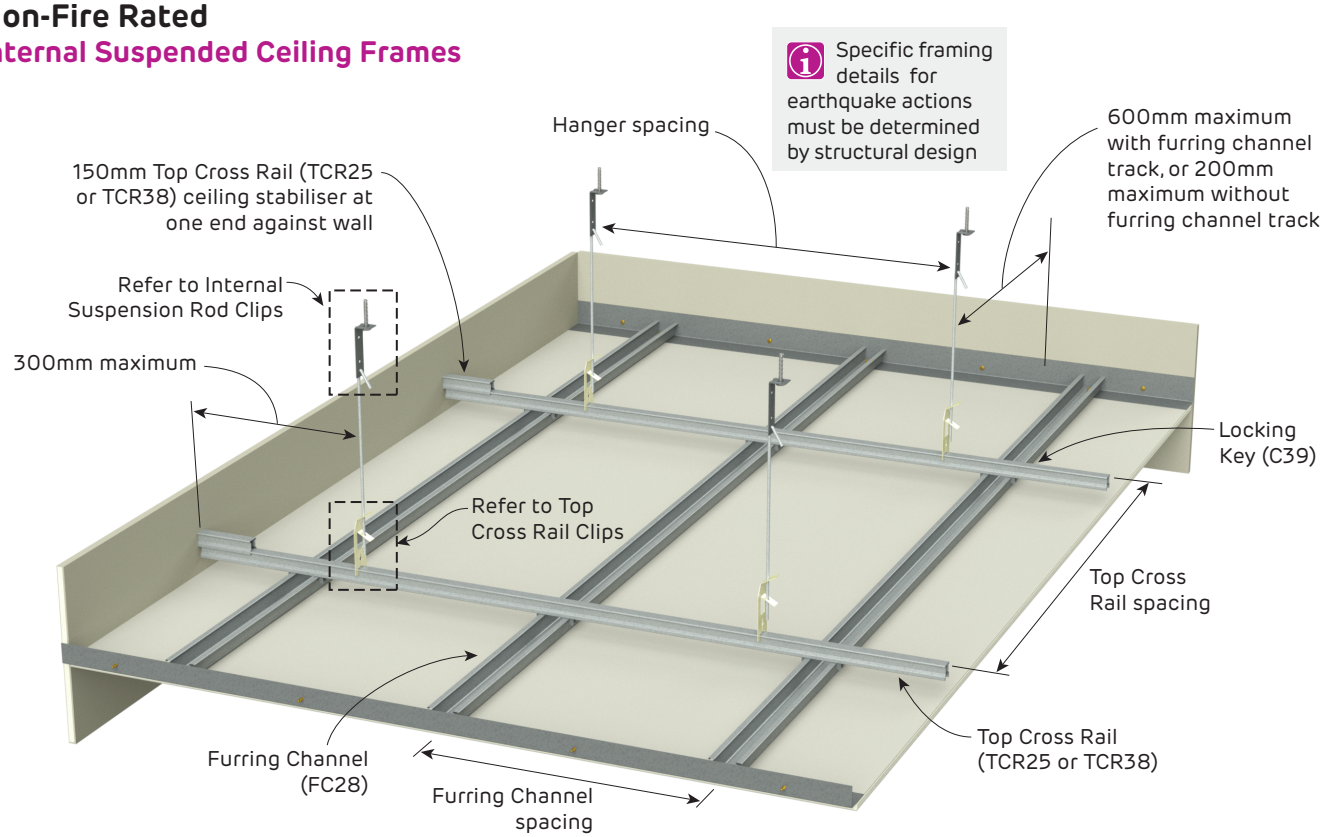

FIGURE 5 Suspended Ceiling Frame
Perspective

Non-Fire Rated
Details for Single Span, Double Span or 3-or-More Span Ceilings

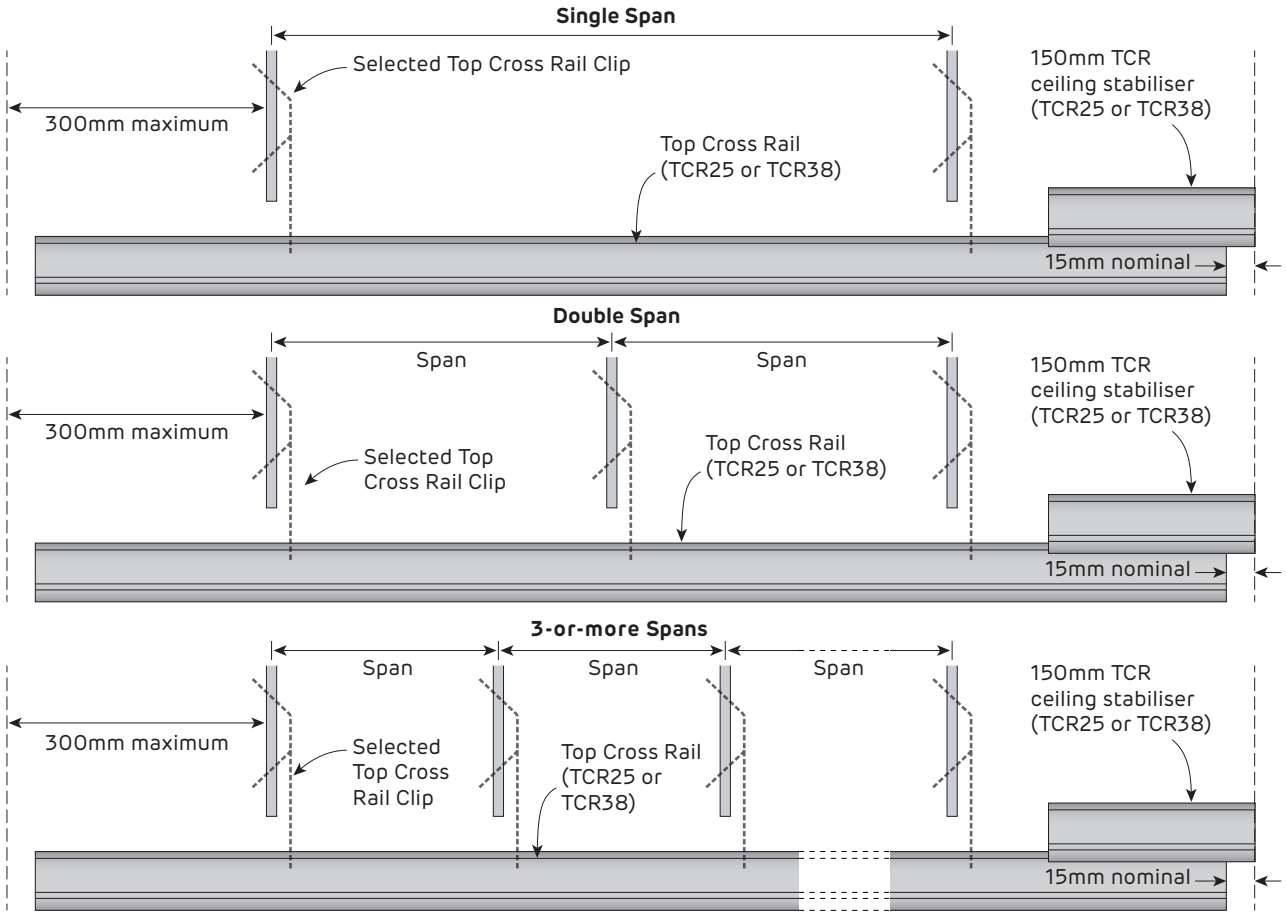

FIGURE 6 Top Cross Rail - Single, Double and 3-or-more Spans
Section

Non-Fire Rated

Typical Suspension Rod Clips

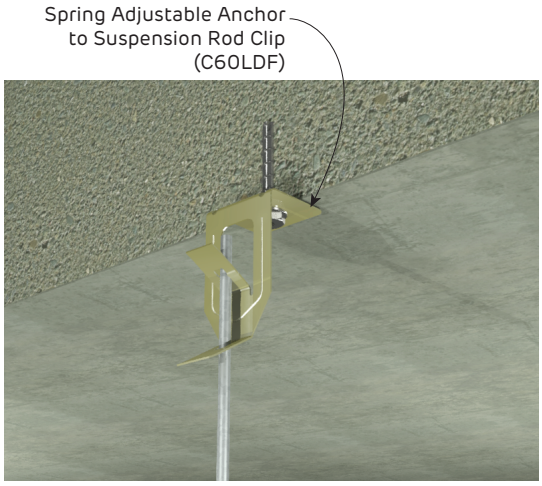

FIGURE 7 Spring Adjustable Direct Fix Clip to Concrete
Perspective

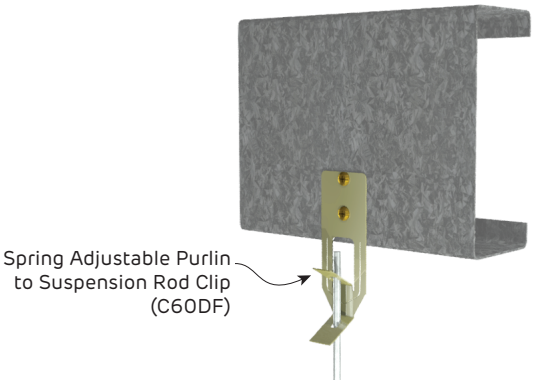

FIGURE 8 Spring Adjustable Direct Fix Clip to Purlin
Perspective

Typical Top Cross Rail Clips

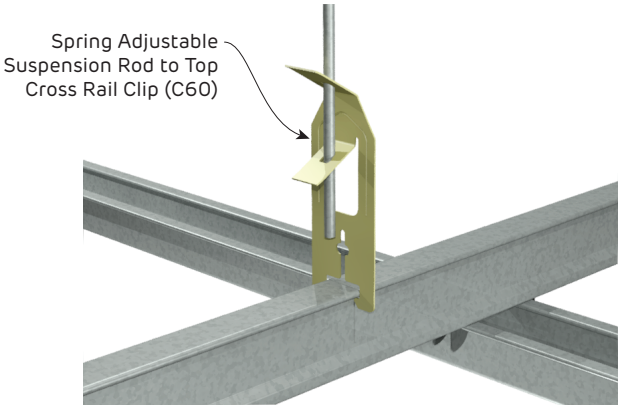

FIGURE 9 Spring Adjustable Suspension Rod to TCR Clip
Perspective and Sections

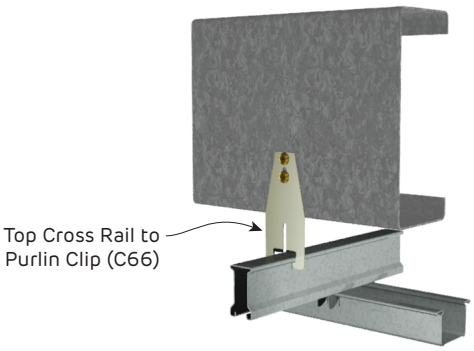

FIGURE 10 Top Cross Rail Direct Fix Clip to Purlin
Perspective and Sections

Locking Key

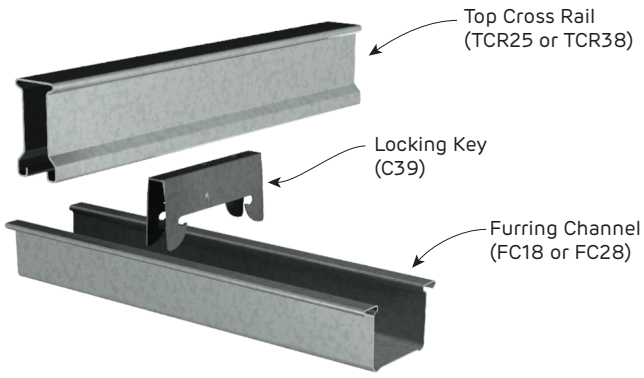

FIGURE 11 Locking Key
Perspective

Table 5 25mm Top Cross Rail Ceiling Span Table - REGION A

Refer to Section 2.3 for assistance determining the relevant wind pressures for a specific project.

25mm Top Cross Rail Span Suspended Ceiling Table	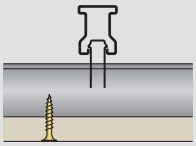	Up to BCA Building Importance Level 3	Ultimate pressure W_U (kPa)	0.39
			Serviceability pressure W_S (kPa)	0.25

Ceiling Lining	28mm Furring Channel Spacing (mm)	Top Cross Rail Spacing (mm)	Single Span		Double Span		3-or-more Spans	
			Hanger Spacing (mm)	Hanger Demand (kN)	Hanger Spacing (mm)	Hanger Demand (kN)	Hanger Spacing (mm)	Hanger Demand (kN)
1 layer of 12.5mm Creason	600	900	1040	0.42	970	0.99	1050	0.98
		1050	990	0.47	900	1.07	970	1.05
		1200	950	0.52	840	1.14	910	1.13
	400	900	1040	0.42	1040	1.06	1120	1.04
		1050	990	0.47	960	1.14	1040	1.13
		1200	900	0.52	900	1.22	970	1.20

Table 6 25mm Top Cross Rail Ceiling Span Table - REGION B

Refer to Section 2.3 for assistance determining the relevant wind pressures for a specific project.

25mm Top Cross Rail Span Suspended Ceiling Table	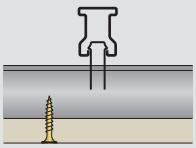	Up to BCA Building Importance Level 3	Ultimate pressure W_U (kPa)	0.59
			Serviceability pressure W_S (kPa)	0.25

Ceiling Lining	28mm Furring Channel Spacing (mm)	Top Cross Rail Spacing (mm)	Single Span		Double Span		3-or-more Spans	
			Hanger Spacing (mm)	Hanger Demand (kN)	Hanger Spacing (mm)	Hanger Demand (kN)	Hanger Spacing (mm)	Hanger Demand (kN)
1 layer of 12.5mm Creason	600	750	1110	0.50	920	1.04	1000	1.03
		900	1040	0.56	840	1.14	910	1.13
		1050	960	0.61	780	1.23	840	1.22
	400	900	1040	0.56	900	1.22	970	1.20
		1050	960	0.61	830	1.31	900	1.30
		1200	900	0.65	780	1.41	840	1.39

Anchor Table

Concrete Grade	Anchor
20 - 25 MPa	SSA6x60
≥32MPa	SSA6x45

1. No edge / spacing effects.

1. Table based upon downward (suction) and upward (uplift) pressures, intended for internal use only. Down-struts are required for uplift.
2. Table includes self weight and 1 kg/m^2 insulation weight with an additional 3 kg/m^2 service load. No further allowance for additional point loads or live loads.
3. Contact Siniat or a structural engineer to check ceiling for earthquake actions. Specific project information is required.
4. Table refers to Siniat Furring Channels of 0.42mm Base Metal Thickness (BMT) of grade G550 steel and Siniat Top Cross Rails of 0.75mm BMT of grade G300, both with Zincalume™ AM150 corrosion protection. Maximum production lengths available are 6.0m
5. Furring Channels checked for 2-or-more spans only. If required, contact Siniat for Single Span furring channel check.
6. Designed in accordance with *AS/NZS 4600:2018 Cold Formed Steel Structures* and *AS/NZS 2785:2020 Suspended Ceilings - Design and Installation.*
7. Wind pressures determined in accordance with *AS/NZS 1170.2 Wind Actions.*
8. Connections to clips must be checked with the *Clip Capacity Table.*
9. Ultimate Limit State Load Case 1: 1.2G + Wu (Suction) + $Q_{0.03kPa\ Service\ Load}$
   Ultimate Limit State Load Case 2: 0.9G + Wu (Uplift).
10. Serviceability Limit State Load Case 1: G, with deflection limited to Span/500.
    Serviceability Limit State Load Case 2: G + Ws, with deflection limited to Span/200.
11. Perimeter anchors at 600mm maximum centres and 100mm maximum from track ends with minimum 0.7 kN shear capacity.
12. The nominated lateral pressures and deflection limits must be checked for suitability for a specific project.
13. For BCA Building Importance Level 4, please contact Siniat.

Table 7 38mm Top Cross Rail Ceiling Span Table - REGION A

Refer to Section 2.3 for assistance determining the relevant wind pressures for a specific project.

38mm Top Cross Rail Span Suspended Ceiling Table	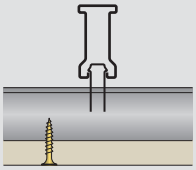	Up to BCA Building Importance Level 3	Ultimate pressure W_U (kPa)	0.39
			Serviceability pressure W_S (kPa)	0.25

Ceiling Lining	28mm Furring Channel Spacing (mm)	Top Cross Rail Spacing (mm)	Single Span		Double Span		3-or-more Spans	
			Hanger Spacing (mm)	Hanger Demand (kN)	Hanger Spacing (mm)	Hanger Demand (kN)	Hanger Spacing (mm)	Hanger Demand (kN)
1 layer of 12.5mm Creason	600	1050	1410	0.67	107	1.27	115	1.25
		1200	1350	0.73	100	1.36	108	1.34
		1350	1300	0.79	940	1.44	102	1.43
	400	1050	1410	0.67	1150	1.37	1240	1.35
		1200	1350	0.73	1080	1.47	1160	1.44
		1350	1300	0.79	1010	1.54	1100	1.54

Table 8 38mm Top Cross Rail Ceiling Span Table - REGION A

Refer to Section 2.3 for assistance determining the relevant wind pressures for a specific project.

38mm Top Cross Rail Span Suspended Ceiling Table	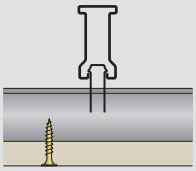	Up to BCA Building Importance Level 3	Ultimate pressure W_U (kPa)	0.46
			Serviceability pressure W_S (kPa)	0.3

Ceiling Lining	28mm Furring Channel Spacing (mm)	Top Cross Rail Spacing (mm)	Single Span		Double Span		3-or-more Spans	
			Hanger Spacing (mm)	Hanger Demand (kN)	Hanger Spacing (mm)	Hanger Demand (kN)	Hanger Spacing (mm)	Hanger Demand (kN)
1 layer of 12.5mm Creason	600	900	1360	0.72	1010	1.34	1090	1.32
		1050	1300	0.79	940	1.42	1020	1.41
		1200	1250	0.85	890	1.52	960	1.50
	400	1050	1360	0.72	1090	1.45	1180	1.43
		1200	1300	0.79	1020	1.55	1100	1.52
		1350	1250	0.85	960	1.64	1040	1.62

Anchor Table

Concrete Grade	Anchor
20 - 25 MPa	SSA6x60
≥32MPa	SSA6x45

1. No edge / spacing effects.

1. Table based upon downward (suction) and upward (uplift) pressures, intended for internal use only. Down-struts are required for uplift.
2. Table includes self weight and 2 kg/m² insulation weight with an additional 3 kg/m² service load. No further allowance for additional point loads or live loads.
3. Contact Siniat or a structural engineer to check ceiling for earthquake actions. Specific project information is required.
4. Table refers to Siniat Furring Channels of 0.42mm Base Metal Thickness (BMT) of grade G550 steel and Siniat Top Cross Rails of 0.75mm BMT of grade G300, both with Zincalume™ AM150 corrosion protection. Maximum production lengths available are 6.0m
5. Furring Channels checked for 2-or-more spans only. If required, contact Siniat for Single Span furring channel check.
6. Designed in accordance with *AS/NZS 4600:2018 Cold Formed Steel Structures* and *AS/NZS 2785:2020 Suspended Ceilings - Design and Installation.*
7. Wind pressures determined in accordance with *AS/NZS 1170.2 Wind Actions.*
8. Connections to clips must be checked with the *Clip Capacity Table* in Section 5.1.
9. Ultimate Limit State Load Case 1: 1.2G + Wu (Suction) + $Q_{0.03kPa\ Service\ Load}$
   Ultimate Limit State Load Case 2: 0.9G + Wu (Uplift).
10. Serviceability Limit State Load Case 1: G, with deflection limited to Span/500.
    Serviceability Limit State Load Case 2: G + Ws, with deflection limited to Span/200.
11. Perimeter anchors at 600mm maximum centres and 100mm maximum from track ends with minimum 0.7 kN shear capacity.
12. The nominated lateral pressures and deflection limits must be checked for suitability for a specific project.
13. For BCA Building Importance Level 4, please contact Siniat.

Table 9 38mm Top Cross Rail Ceiling Span Table - REGION B

Refer to Section 2.3 for assistance determining the relevant wind pressures for a specific project.

38mm Top Cross Rail Span Suspended Ceiling Table	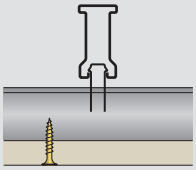	Up to BCA Building Importance Level 3	Ultimate pressure W_U (kPa)	0.59
			Serviceability pressure W_S (kPa)	0.25

Ceiling Lining	28mm Furring Channel Spacing (mm)	Top Cross Rail Spacing (mm)	Single Span		Double Span		3-or-more Spans	
			Hanger Spacing (mm)	Hanger Demand (kN)	Hanger Spacing (mm)	Hanger Demand (kN)	Hanger Spacing (mm)	Hanger Demand (kN)
1 layer of 12.5mm Creason	600	900	1380	0.75	1000	1.36	1080	1.34
		1050	1290	0.82	920	1.46	1000	1.45
		1200	1220	0.88	860	1.55	930	1.54
	400	900	1380	0.75	1080	1.46	1160	1.44
		1050	1290	0.82	1000	1.58	1080	1.56
		1200	1220	0.88	930	1.68	1010	1.67

Table 10 38mm Top Cross Rail Ceiling Span Table - REGION B

Refer to Section 2.3 for assistance determining the relevant wind pressures for a specific project.

38mm Top Cross Rail Span Suspended Ceiling Table	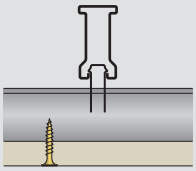	Up to BCA Building Importance Level 3	Ultimate pressure W_U (kPa)	0.71
			Serviceability pressure W_S (kPa)	0.3

Ceiling Lining	28mm Furring Channel Spacing (mm)	Top Cross Rail Spacing (mm)	Single Span		Double Span		3-or-more Spans	
			Hanger Spacing (mm)	Hanger Demand (kN)	Hanger Spacing (mm)	Hanger Demand (kN)	Hanger Spacing (mm)	Hanger Demand (kN)
1 layer of 12.5mm Creason	600	900	1300	0.81	930	1.45	1000	1.43
		1050	1220	0.89	860	1.56	930	1.55
		1200	1150	0.96	800	1.66	870	1.65
	400	900	1300	0.81	1000	1.56	1090	1.55
		1050	1220	0.89	930	1.69	1000	1.66
		1200	1150	0.96	840	1.75	920	1.75

Anchor Table

Concrete Grade	Anchor
20 - 25 MPa	SSA6x60
≥32MPa	SSA6x45

1. No edge / spacing effects.

1. Table based upon downward (suction) and upward (uplift) pressures, intended for internal use only. Down-struts are required for uplift.
2. Table includes self weight and 2 kg/m^2 insulation weight with an additional 3 kg/m^2 service load. No further allowance for additional point loads or live loads.
3. Contact Siniat or a structural engineer to check ceiling for earthquake actions. Specific project information is required.
4. Table refers to Siniat Furring Channels of 0.42mm Base Metal Thickness (BMT) of grade G550 steel and Siniat Top Cross Rails of 0.75mm BMT of grade G300, both with Zincalume™ AM150 corrosion protection. Maximum production lengths available are 6.0m
5. Furring Channels checked for 2-or-more spans only. If required, contact Siniat for Single Span furring channel check.
6. Designed in accordance with *AS/NZS 4600:2018 Cold Formed Steel Structures* and *AS/NZS 2785:2020 Suspended Ceilings - Design and Installation.*
7. Wind pressures determined in accordance with *AS/NZS 1170.2 Wind Actions.*
8. Connections to clips must be checked with the *Clip Capacity Table* in Section 5.1.
9. Ultimate Limit State Load Case 1: 1.2G + Wu (Suction) + $Q_{0.03kPa\ Service\ Load}$
   Ultimate Limit State Load Case 2: 0.9G + Wu (Uplift).
10. Serviceability Limit State Load Case 1: G, with deflection limited to Span/500.
    Serviceability Limit State Load Case 2: G + Ws, with deflection limited to Span/200.
11. Perimeter anchors at 600mm maximum centres and 100mm maximum from track ends with minimum 0.7 kN shear capacity.
12. The nominated lateral pressures and deflection limits must be checked for suitability for a specific project.
13. For BCA Building Importance Level 4, please contact Siniat.

Layout

Plan the ceiling layout to suit the creason sheet size in order to minimise the number of joints and create symmetrical patterns.
Start sheeting from the centre of the room.
Install creason ceilings perpendicular to framing members.
Chamfer butt joints and cut edges in preparation for jointing.
Fix butt joints on Wide-face Furring Channel (FC60/28).
Install one entire row in each direction before proceeding. Refer to Figure 12.

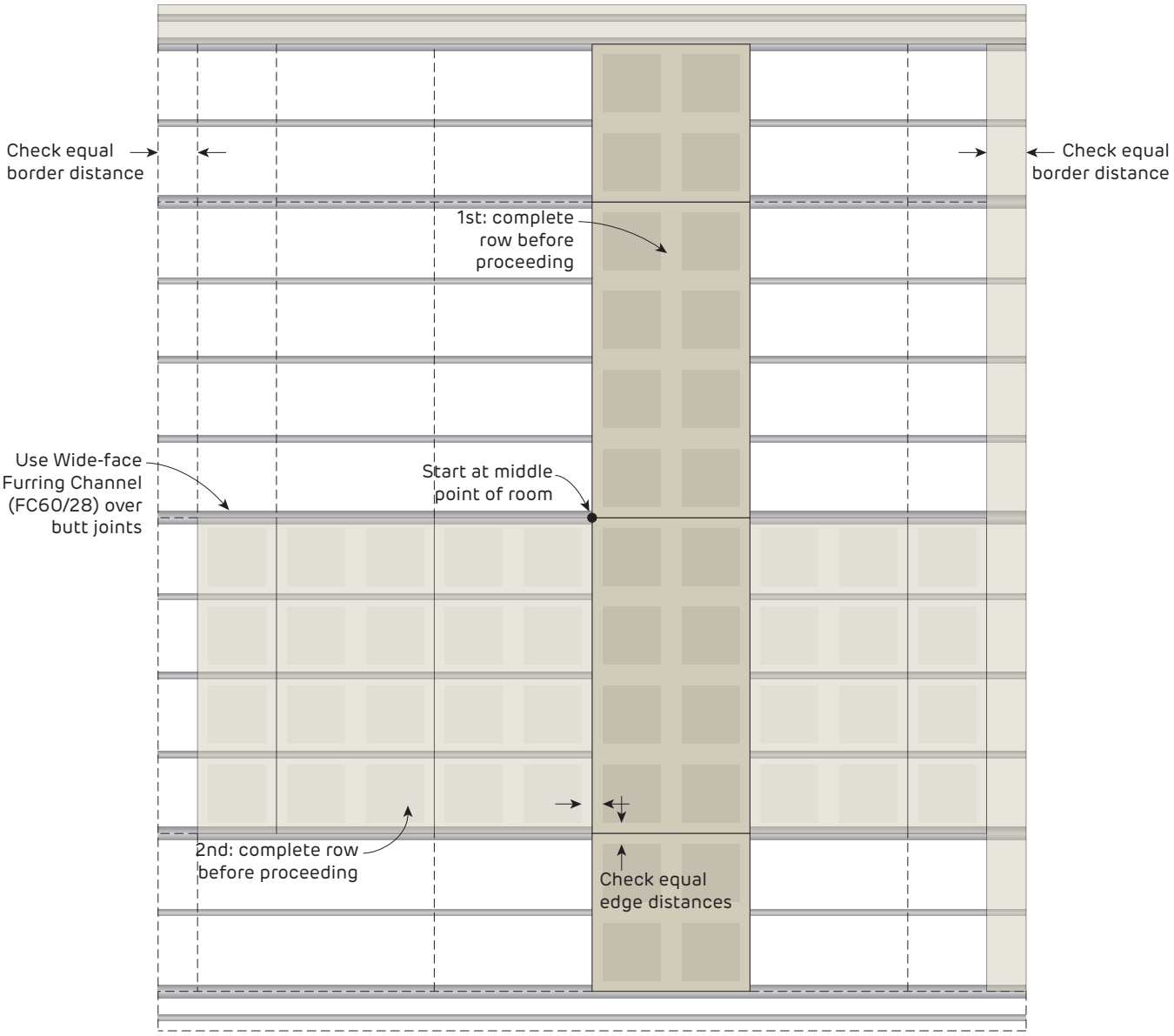

FIGURE 12 Ceiling Layout
Plan

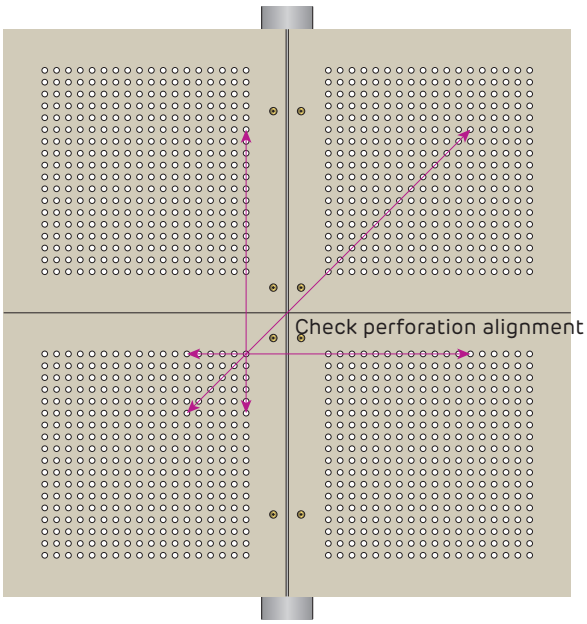

FIGURE 13 Perforation Alignment
Plan

Fixing

Use the 'Screw Only Method'. Adhesive is not permitted.
Drive screws to just below the sheet surface, taking care not to break the paper linerboard. For over-driven screws, install another screw 20mm away. Leave or remove the over-driven screw and patch.

Screw Type and Minimum Size for the Installation of Plasterboard to Steel

Plasterboard Thickness	1st Layer
12.5mm	6g x 25mm screw

For steel ≤ 0.75mm BMT, use fine thread needle point screws.
For steel ≥ 0.75mm BMT, use fine thread drill point screws.

Fastener Type and Minimum Size for the Installation of Plasterboard to Softwood Timber

Plasterboard Thickness	1st Layer
12.5mm	6g x 32mm screw

FIGURE 14 Creason Internal Ceiling - 1 Layer
Screw Only Method

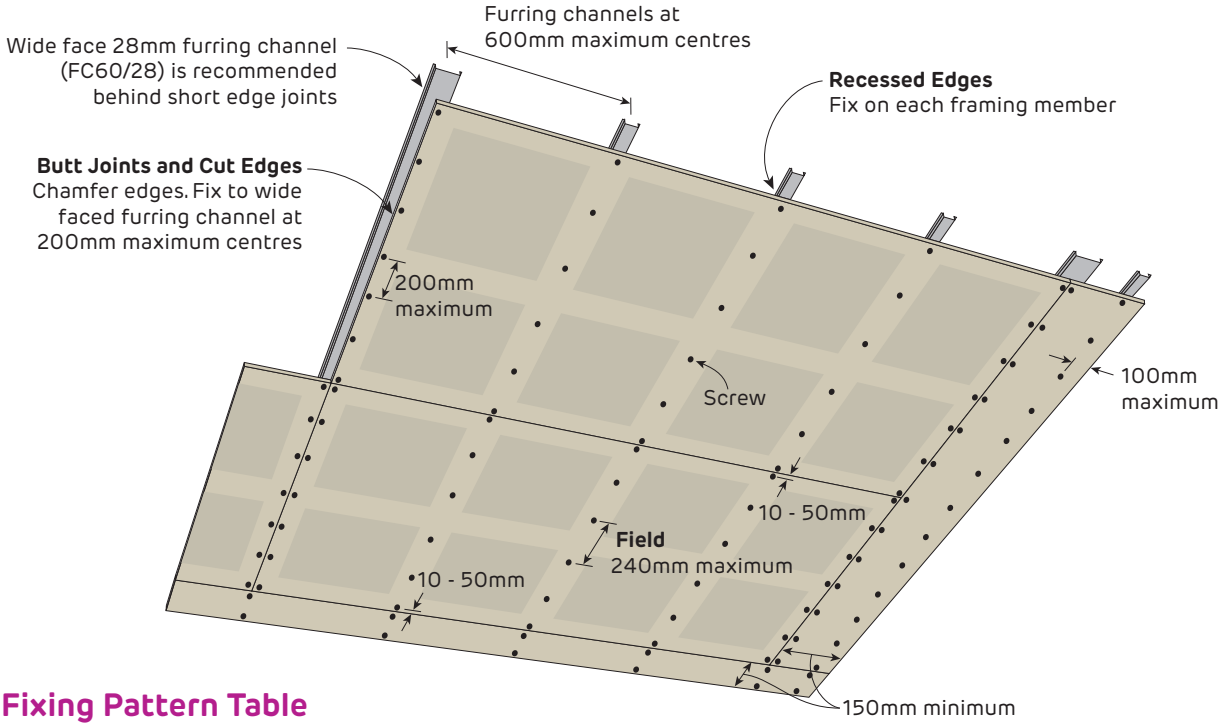

Fixing Pattern Table

Sheet Width	Location	Screw Fixing Pattern
1200mm	Field	S S S S S S (6)
	Short edges (butt joints)	S S S S S S S (7)

S = One screw

Maximum Ultimate Limit State Wind Load Table (kPa)

Plasterboard Thickness	Maximum Ceiling Frame Spacing		
	600mm	400mm	300mm
12.5mm	1.00	1.55	2.10

1. Calculations do not include the framing which must be independently designed to suit the desired load.
2. Calculations include a ceiling insulation with maximum weight of 1.05 kg/m² (equivalent to Pink® Partition 75mm 14kg/m³ R1.9 Batts).
3. If higher internal wind pressures are expected, please contact Siniat for specific design.

Curving

Apply water on the front face with a roller and leave for 30 minutes.
Lay the sheet over a template. Secure the panel on one side of the template.
Press the sheet against the template using a batten, moving it every 100mm. Secure the panel on the other side of the template. Drying time approximately 2 hours.

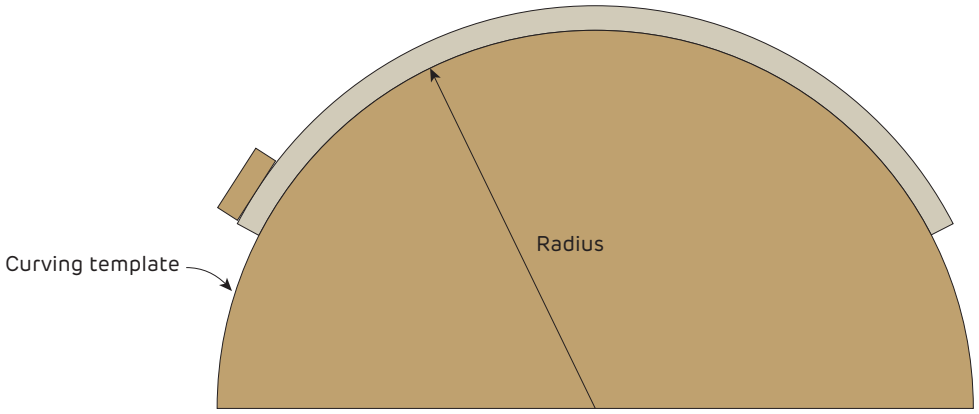

FIGURE 15 Curving Template
Section

Table 11 Maximum Frame Spacing and Minimum Curve Radius for Creason

Creason	Curve Radius (mm)		
	2000	2500	3000
	Maximum Framing Centres (mm)		
Concave - curved along length	300	300	400
Convex - curved along length	300	300	400
Concave - curved along width	-	300	400
Convex - curved along width	-	-	400

Finishing

Jointing

Jointing must not be conducted until all ceiling services and access panels are installed in the ceiling, otherwise the excessive vibration may cause joint cracking or peaking.
Dampen chamfered edges with water to remove any loose gypsum before applying jointing compounds.
Use paper tape and 2 coats of **masta**base, **masta**longset or **masta**tape-in and a finish coat of **masta**glide, **masta**line or **masta**lite. For more information refer to Section 7.3.
Do not obstruct perforations during jointing.

Sanding

Sanding is a critical part of achieving a high quality finish. Care should be taken when sanding joints to achieve a smooth surface.
Lightly sand to a smooth even surface using 150 to 220 grit sandpaper or sanding mesh. Do not expose or scuff the paper linerboard while sanding.

Painting

A three coat paint system must be applied in accordance with Australian Standard *AS/NZS 2311, Guide to the painting of buildings*. Both the quality of the paint and how it is applied have a large effect on the finished appearance of the crea**son** plasterboard.
Apply the paint with a short napped roller and avoid the application of excess paint at any time.

- Only use a roller application for painting. Roller application applies a uniform texture over the entire surface and ensures the paint does not fill the perforations or contact the acoustic felt on the back of the plasterboard.
- Spray painting is not permitted.
- For more information on finishing plasterboard refer to Section 7.

Non-Fire Rated
Creason Details

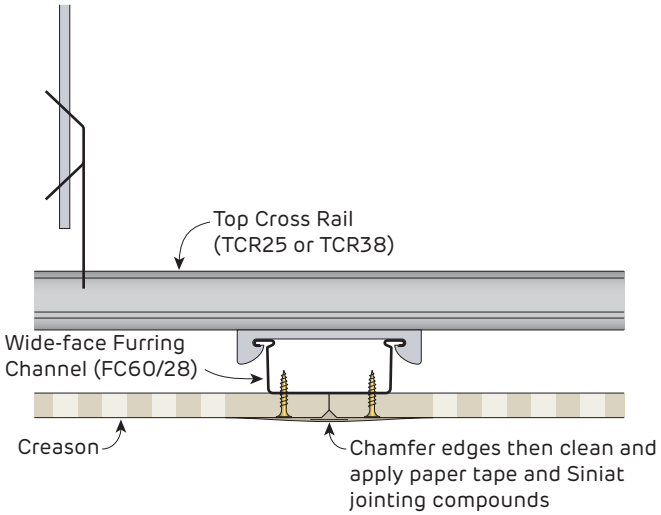

FIGURE 16 Butt Joints
Section

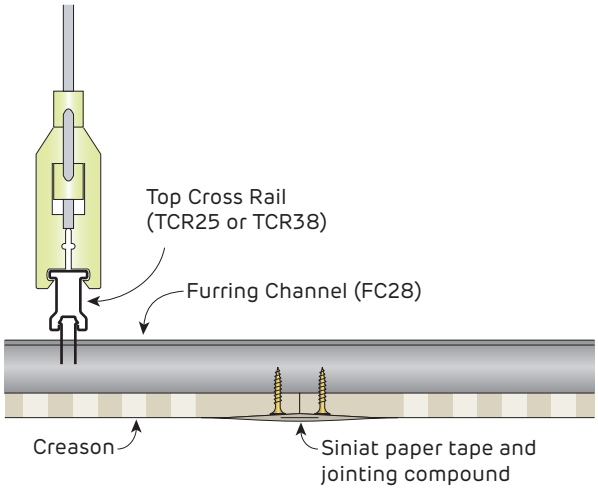

FIGURE 17 Recessed Joints
Section

Control Joints

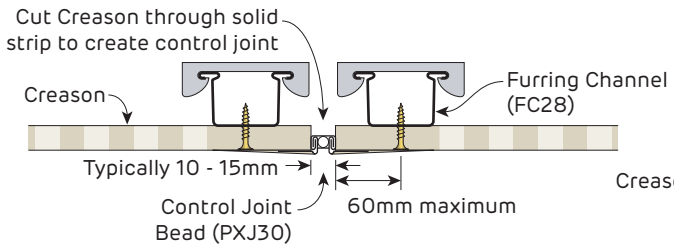

FIGURE 18 Control Joint
Parallel to furring channel
Section

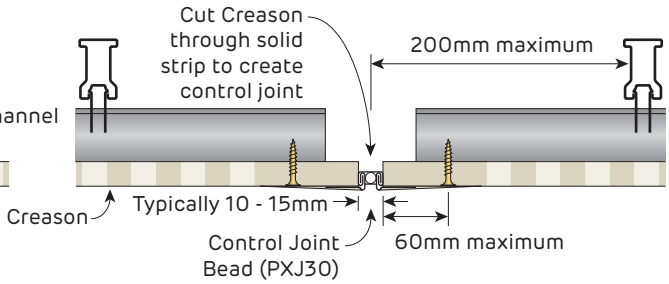

FIGURE 19 Control Joint
Perpendicular to furring channel
Section

Non-Fire Rated
Ceiling Perimeter Finishing Details

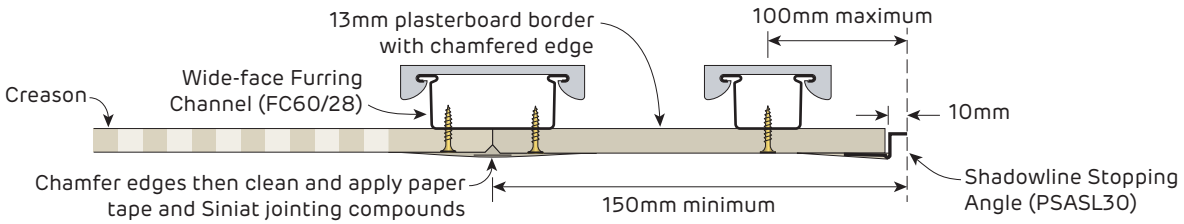

FIGURE 20 Finishing Detail - Shadowline
Section

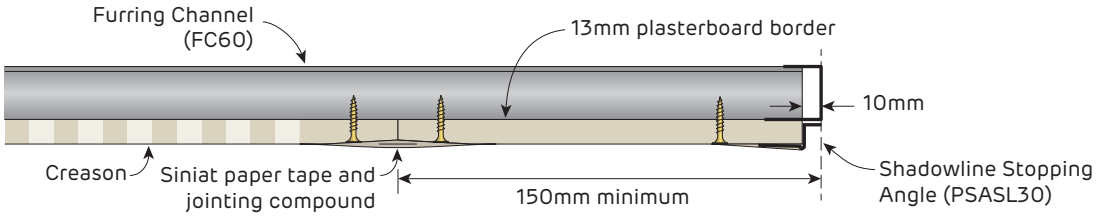

FIGURE 21 Finishing Detail - Shadowline
Section

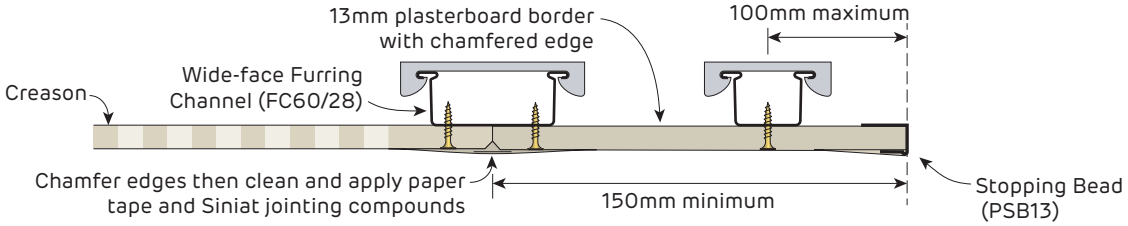

FIGURE 22 Finishing Detail - Stopping Bead
Section

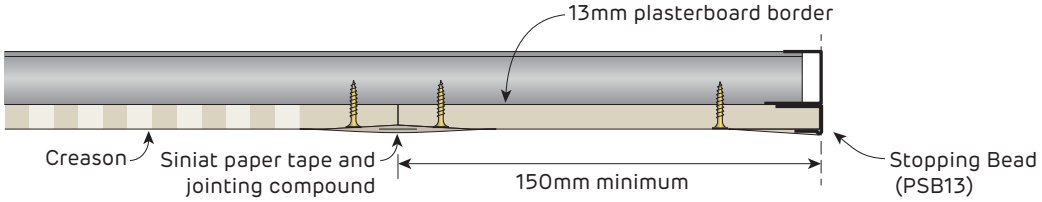

FIGURE 23 Finishing Detail - Stopping Bead
Section

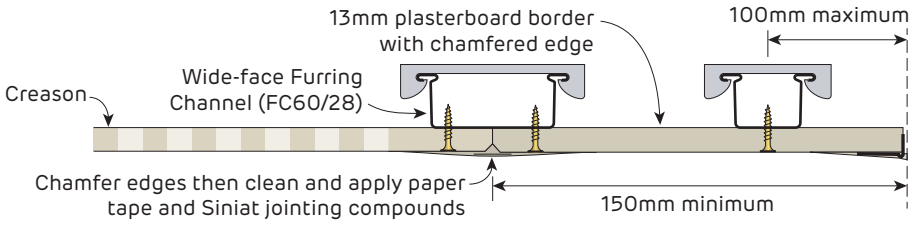

Ceilings using a square set finishing detail have low tolerance for building movement and are more prone to cracking and joint peaking

FIGURE 24 Finishing Detail - Tear Away Bead
Section

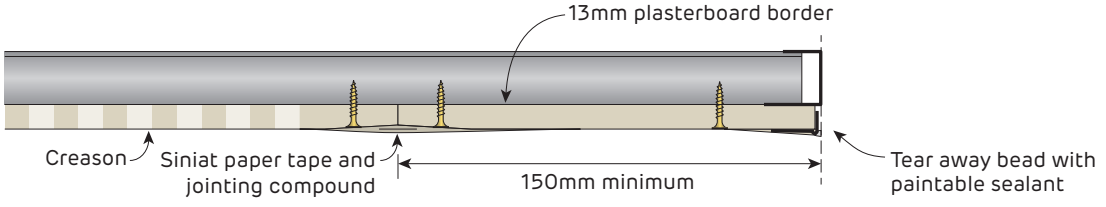

FIGURE 25 Finishing Detail - Tear Away Bead
Section

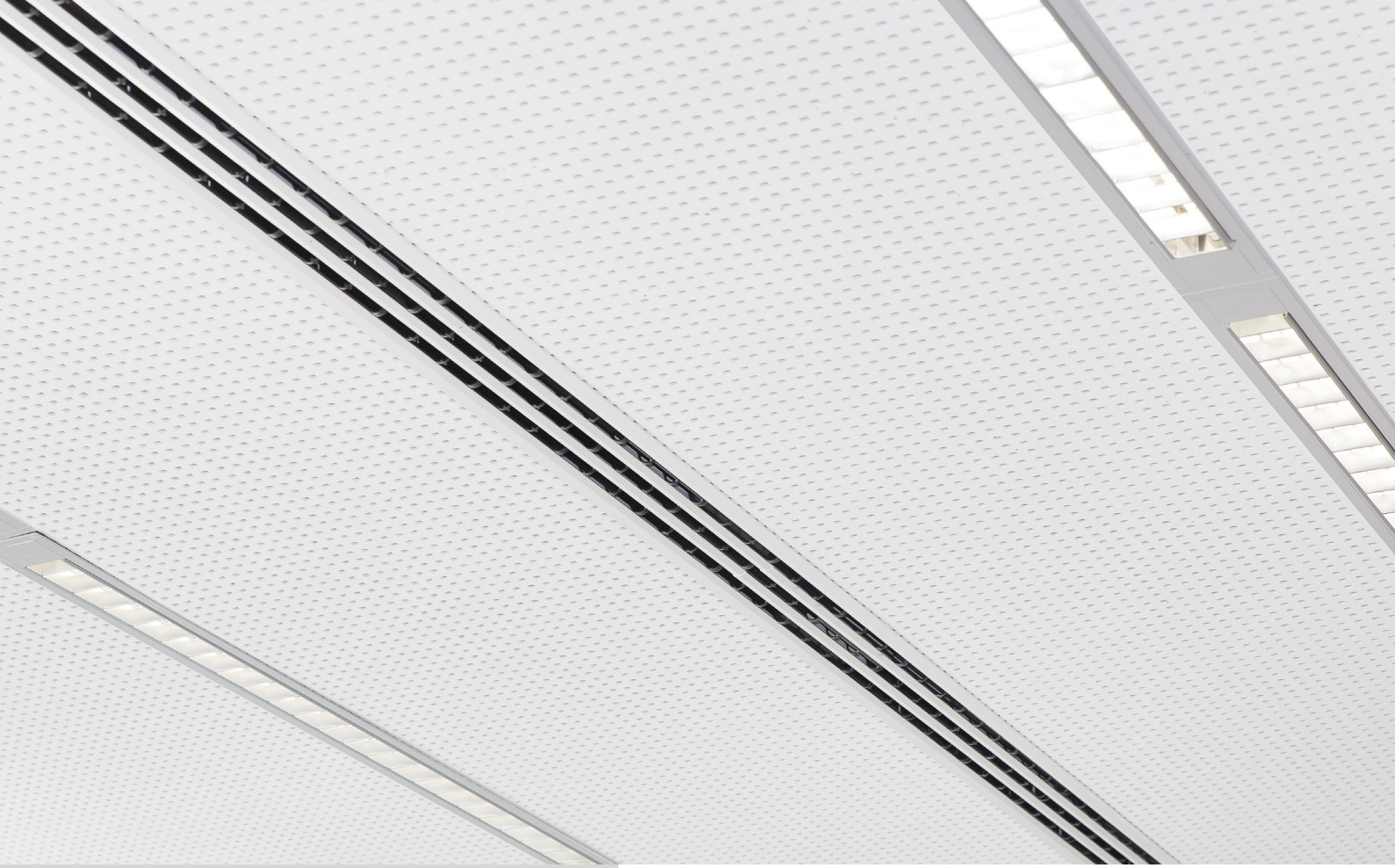

SYSTEMS	**680**
EDGE TYPE	685
INSTALLATION	**686**
GENERAL REQUIREMENTS	686
FRAMING	687
ACCESS PANEL	697
LAYOUT	698
FIXING	700
FINISHING	702
CONSTRUCTION DETAILS	**703**

6.8 Createx Perforated Plasterboard

createx with CAPT'AIR® technology brings a breath of fresh air to wall and acoustic ceiling linings. Delivering excellent acoustic performance, stunning aesthetics and CAPT'AIR® air cleaning properties, **createx** is the smart choice for all commercial applications.

Manufactured with high quality, ultra-sharp perforations in a variety of continuous perforated patterns for a seamless finish, **createx** with CAPT'AIR® technology meets the high level of acoustic performance required for commercial public areas such as offices, shopping centres, airports, schools, hospitals, conference halls, lecture theatres and libraries.

createx with CAPT'AIR® technology incorporates urea polymer manufacturing process which reacts with formaldehyde creating a non-harmful compound that is absorbed by the plasterboard. This results in a safer environment for any space where **createx** is installed.

Round R8/18

8mm diameter circle perforations with dark backing fleece

Open Area: 14.3 %

Furring Channel Centres: 400mm maximum

Sheet Dimensions: 1200 x 1988 x 12.5mm

Weight: 10 kg/m² (approximate)

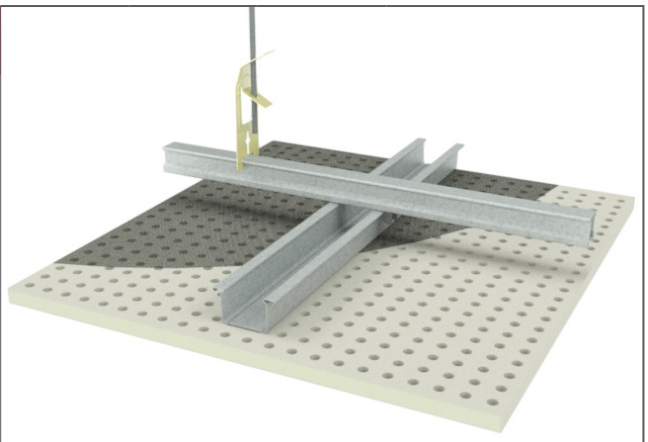

	Ceiling Cavity (mm)	α_p - Frequency (Hz)						α_w	NRC
		125	250	500	1000	2000	4000		
Pink® Partition 50mm 14kg/m³ R1.3	37	0.35	0.85	1.0	0.9	0.65	0.6	**0.7**	**0.85**
	187	0.55	0.95	0.85	0.85	0.65	0.6	**0.7**	**0.85**
Pink® Partition 75mm 14kg/m³ R1.9	187	0.55	0.8	0.8	0.75	0.7	0.65	**0.7**	**0.75**
No Insulation	187	0.45	0.7	0.8	0.7	0.65	0.6	**0.7**	**0.7**
Pink® Partition 75mm 14kg/m³ R1.9	587	0.65	0.7	0.8	0.7	0.6	0.65	**0.7**	**0.7**

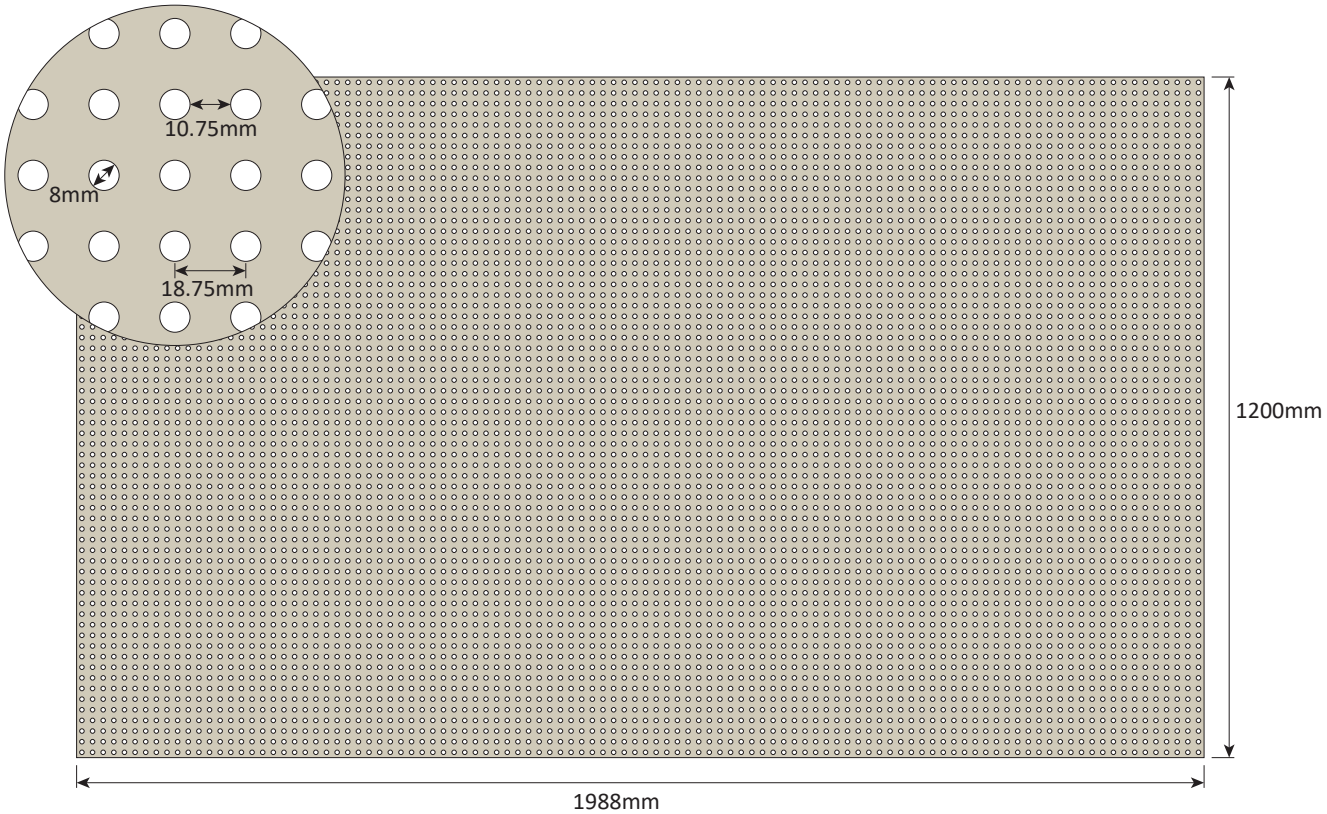

Round R12/25

12mm diameter circle perforations with dark backing fleece

Open Area: 18.2 %

Furring Channel Centres: 400mm maximum

Sheet Dimensions: 1200 x 2000 x 12.5mm

Weight: 10 kg/m² (approximate)

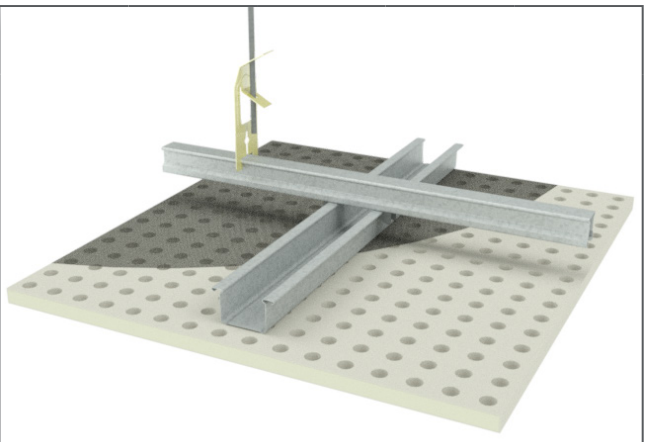

	Ceiling Cavity (mm)	α_p - Frequency (Hz)						α_w	NRC
		125	250	500	1000	2000	4000		
Pink® Partition 50mm 14kg/m³ R1.3	37	0.35	0.75	0.95	0.9	0.75	0.65	**0.8**	**0.85**
Pink® Partition 75mm 14kg/m³ R1.9	187	0.6	0.8	0.85	0.8	0.8	0.75	**0.75**	**0.8**
No Insulation	187	0.45	0.75	0.9	0.7	0.7	0.55	**0.7**	**0.75**

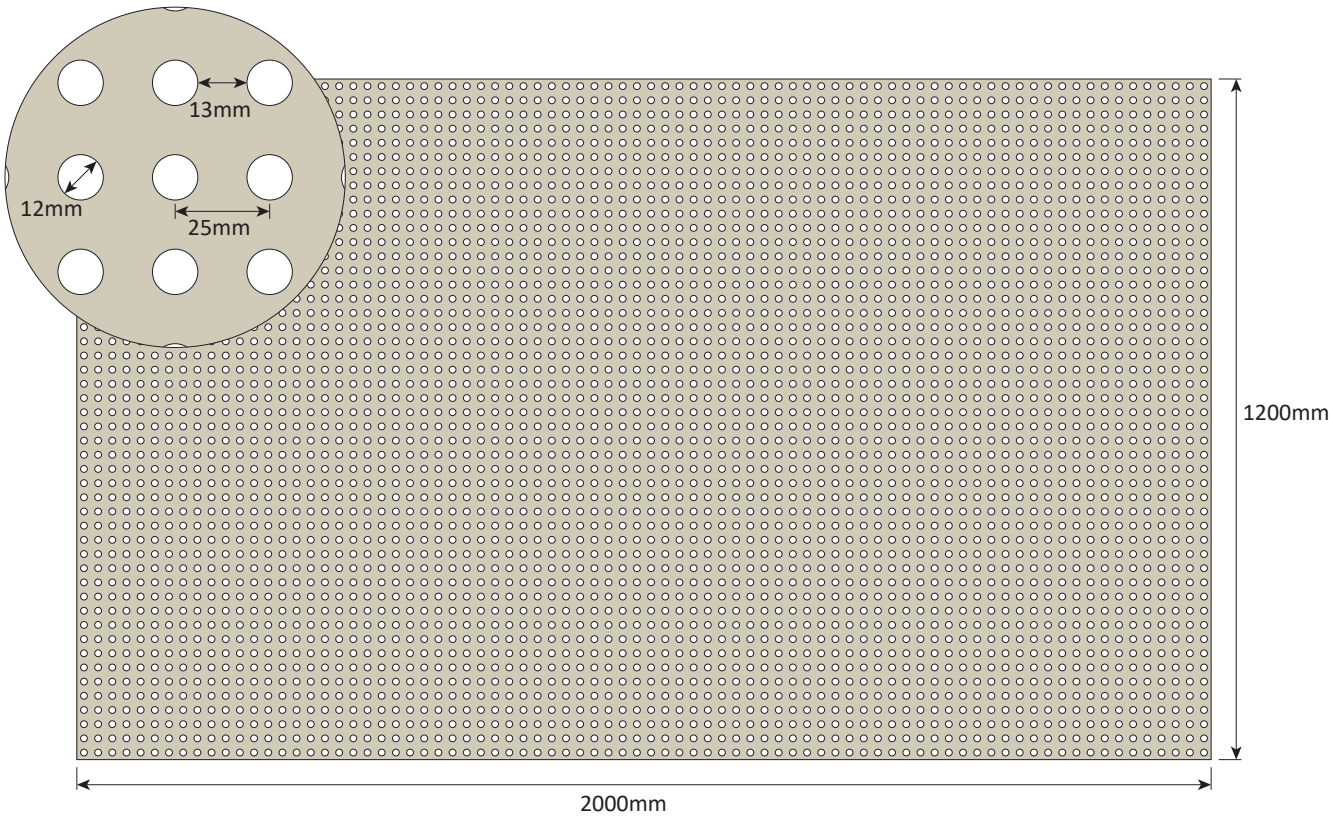

Cube C12/25

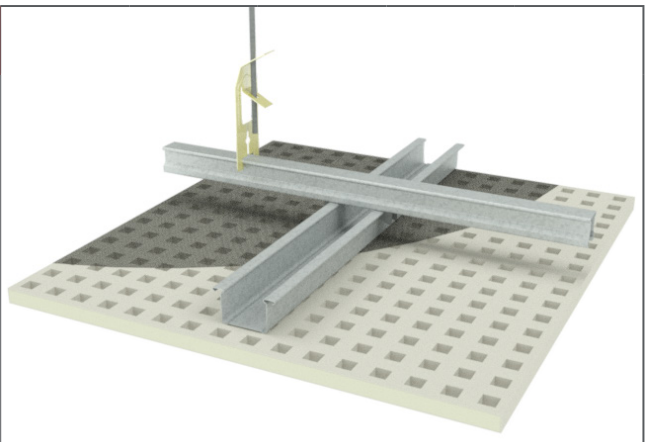

12mm square perforations with dark backing fleece

Open Area: 23.1 %

Furring Channel Centres: 400mm maximum

Sheet Dimensions: 1200 x 2000 x 12.5mm

Weight: 10 kg/m² (approximate)

	Ceiling Cavity (mm)	α_p - Frequency (Hz)						α_w	NRC
		125	250	500	1000	2000	4000		
Pink® Partition 50mm 14kg/m³ R1.3	37	0.25	0.7	0.85	0.85	0.75	0.75	**0.85**	**0.8**
No Insulation	187	0.45	0.8	0.9	0.75	0.7	0.65	**0.75**	**0.8**
Pink® Partition 75mm 14kg/m³ R1.9	187	0.6	0.9	0.95	0.9	0.85	0.8	**0.9**	**0.9**
Pink® Partition 75mm 14kg/m³ R1.9	587	0.75	0.8	0.9	0.85	0.75	0.8	**0.85**	**0.85**

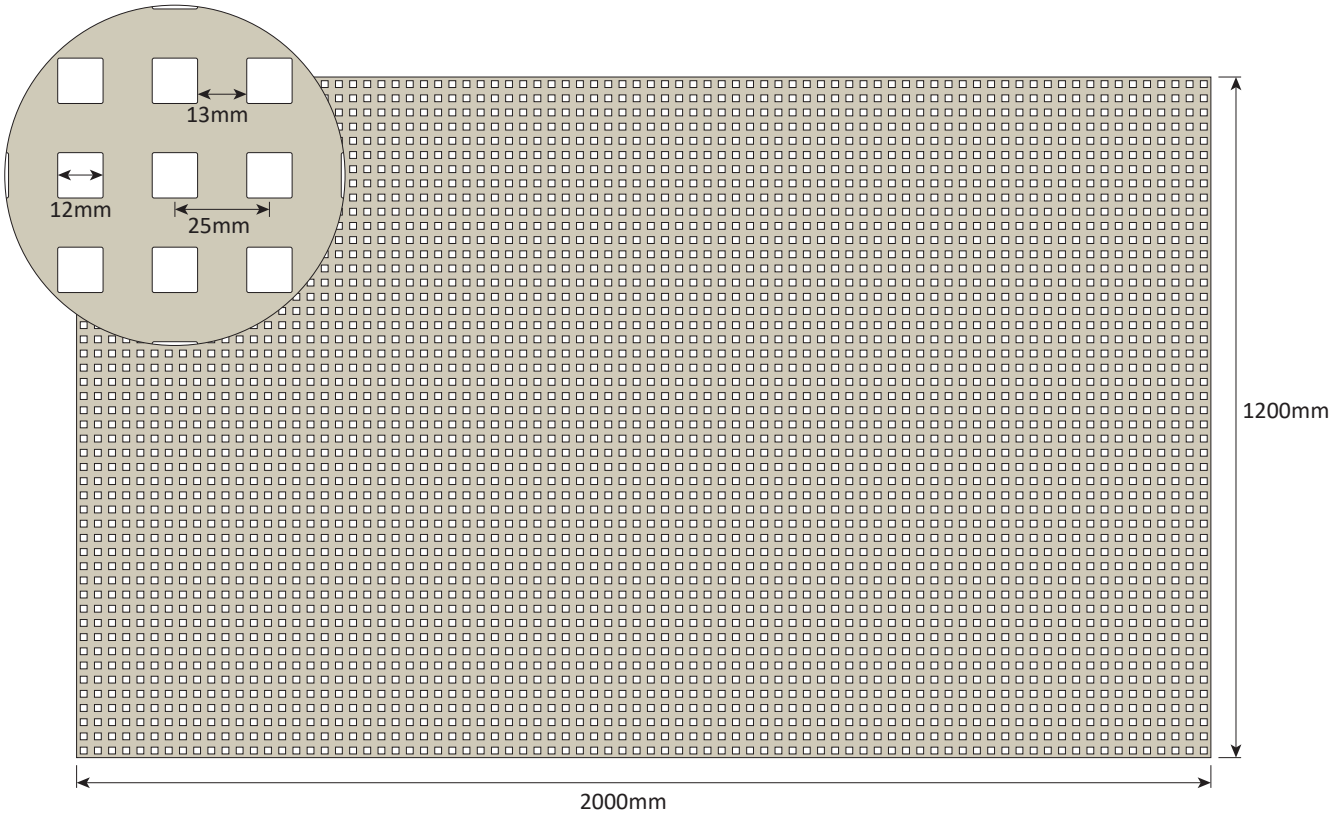

Dynamic D8-12

8mm and 12mm diameter circle perforations with dark backing fleece

Open Area: 13.1 %

Furring Channel Centres: 400mm maximum

Sheet Dimensions: 1200 x 2000 x 12.5mm

Weight: 10 kg/m² (approximate)

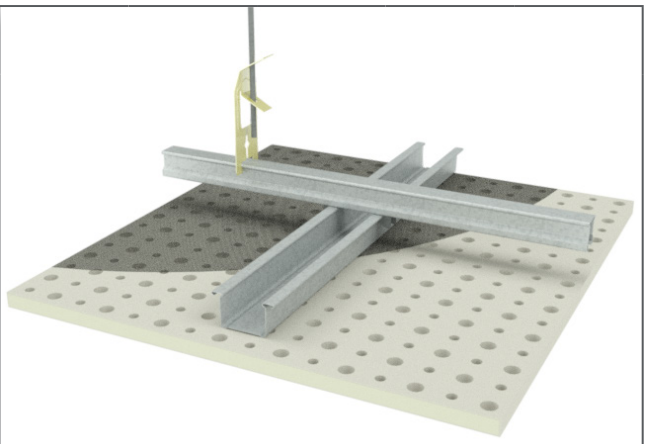

	Ceiling Cavity (mm)	α_p - Frequency (Hz)						α_w	NRC
		125	250	500	1000	2000	4000		
No Insulation	187	0.25	0.65	0.6	0.35	0.3	0.35	**0.35**	**0.5**
Pink® Partition 75mm 14kg/m³ R1.9	187	0.55	1.0	0.9	0.7	0.5	0.45	**0.55**	**0.8**
Pink® Partition 75mm 14kg/m³ R1.9	587	0.6	0.7	0.75	0.7	0.6	0.6	**0.7**	**0.7**

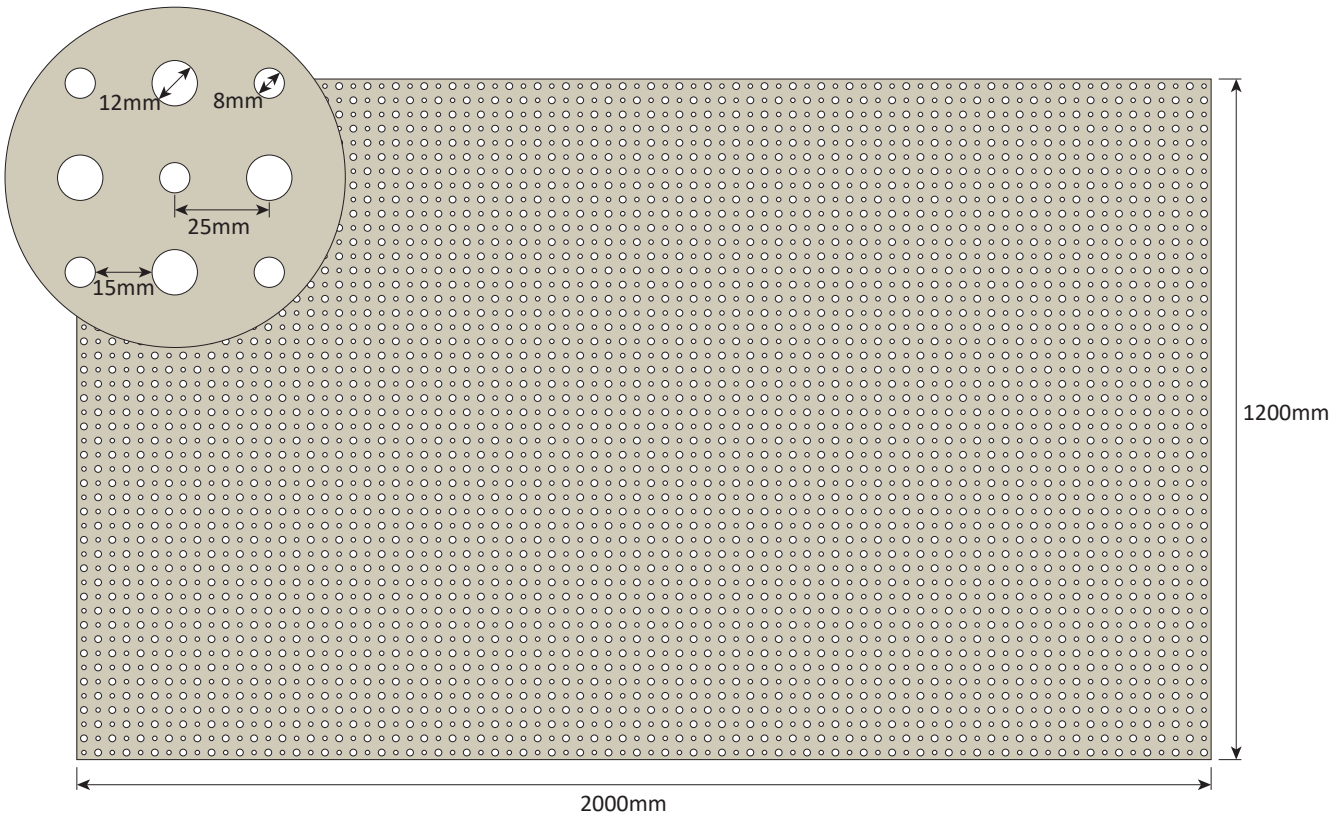

Space S8-15-20

8mm, 15mm and 20mm diameter circle perforations with dark backing fleece

Open Area: 10.2 %

Furring Channel Centres: 400mm maximum

Sheet Dimensions: 1200 x 1950 x 12.5mm

Weight: 10 kg/m² (approximate)

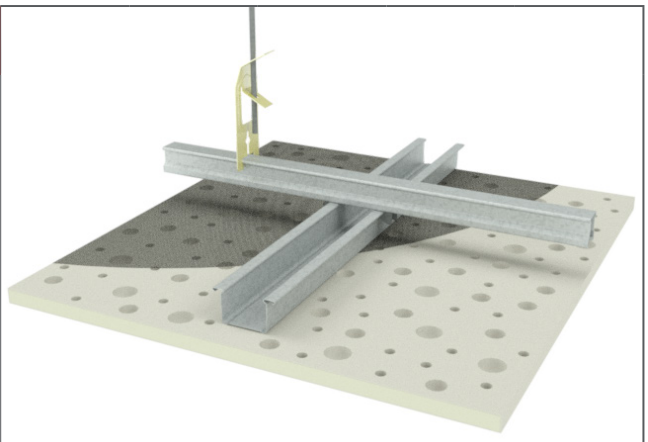

	Ceiling Cavity (mm)	α_p - Frequency (Hz)						α_w	NRC
		125	250	500	1000	2000	4000		
Pink® Partition 50mm 14kg/m³ R1.3	37	0.4	0.7	0.65	0.65	0.5	0.5	**0.6**	**0.65**
No Insulation	187	0.45	0.65	0.7	0.6	0.45	0.4	**0.5**	**0.6**
Pink® Partition 50mm 14kg/m³ R1.3	187	0.45	0.6	0.65	0.65	0.5	0.5	**0.6**	**0.6**
Pink® Partition 75mm 14kg/m³ R1.9	187	0.5	0.65	0.65	0.65	0.5	0.5	**0.6**	**0.6**
Pink® Partition 75mm 14kg/m³ R1.9	587	0.6	0.6	0.7	0.65	0.45	0.45	**0.55**	**0.6**

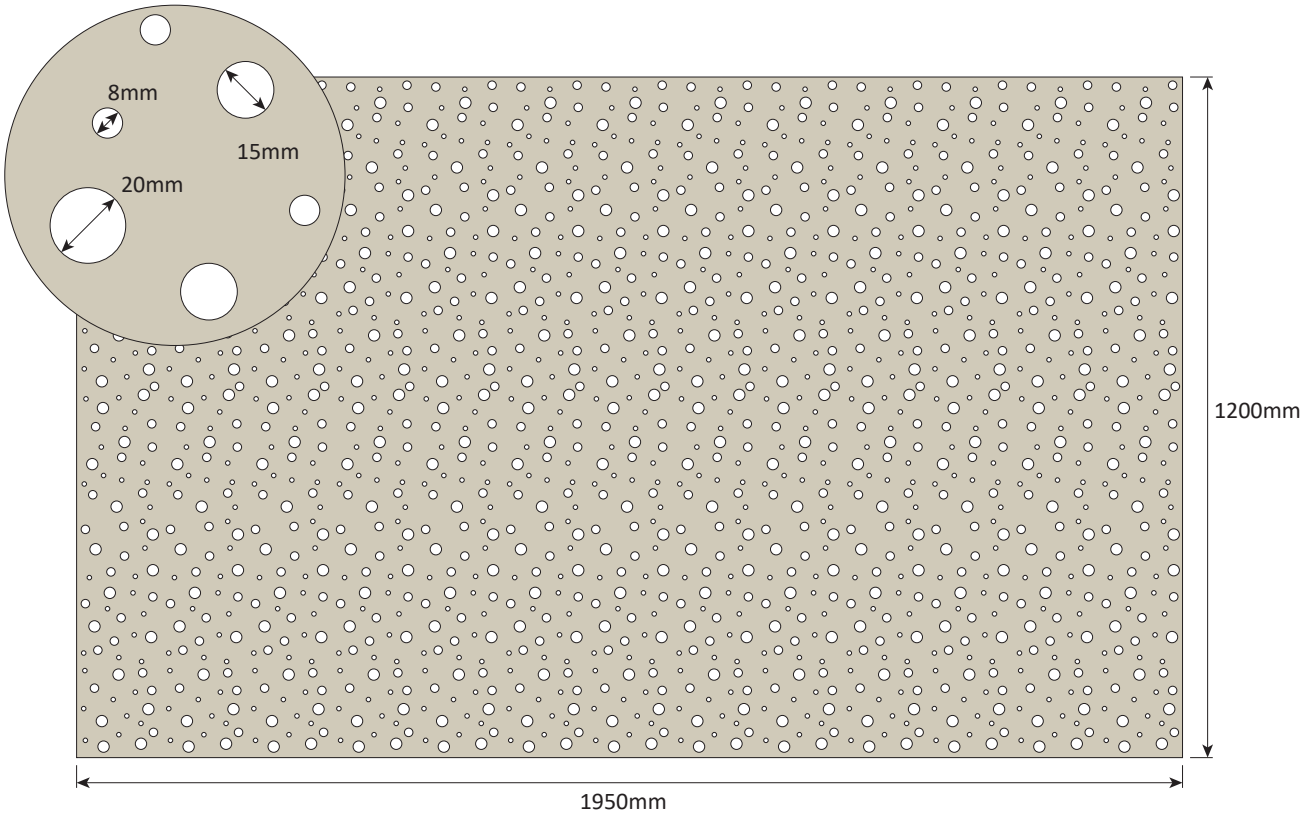

Edge Type

V Edge

All createx perforation patterns come with a V edge profile.

The V edge profile easily facilitates precise alignment of the perforated boards, ensuring that the boards are straight and the continuous perforation patterns align perfectly.

The V edge is used when a jointless appearance is required. Joints are tapeless and virtually invisible when filled with mastatape-in jointing compound followed by mastalite, mastaglide, or mastaline to finish the joint ready for painting.

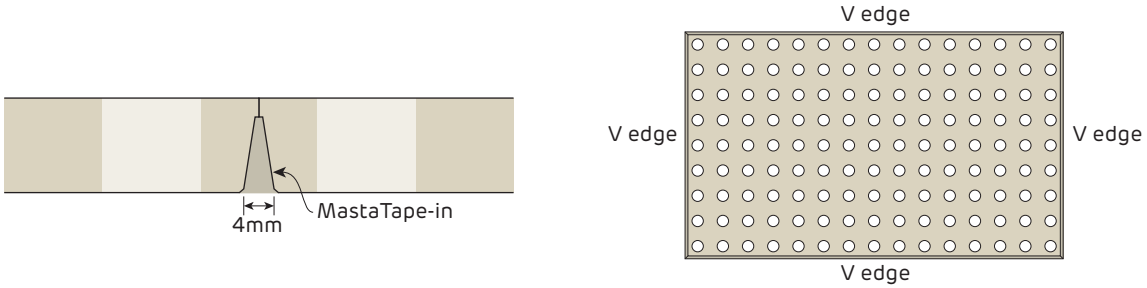

FIGURE 1 V Edge
Section

Createx Jointing Compound

Name	Size	Type	Application
			Createx Joints
mastatape-in	20 kg bucket	Premix	✓



General Requirements

Install control joints in plasterboard ceilings: > At 10m maximum intervals > At all control joints in the structure > At any change in the substrate > At the junction of a larger room and passageway. Separate create**x** ceilings from other building elements, such as walls and columns by creating control joints that allow for movement, e.g. utilising a shadow line profile or tear away bead.
Do not rigidly fix create**x** to the perimeter.
All ceilings in this section are non-trafficable. Do not walk on plasterboard ceilings!
Limit dead loads on create**x** ceilings to 2 kg/m^2.
Attach ceiling fixtures to framing members only. Ensure the framing is designed to carry any additional load.
Cut all openings for services before jointing with masta**tape-in**.
Locate ceiling services between framing to avoid cutting of top cross rails or furring channels. If furring channels are cut then provide additional support with top cross rails and hangers. Refer to Figures 15 and 16.

> create**x** must have an air cavity behind it for it to perform as a sound absorber.

> create**x** installations in close proximity to metal roofs (i.e. raked ceiling or with small ceiling cavities) require smaller control joint intervals or joints left unfilled as they are exposed to larger rates of thermal expansion and contraction of the roof and/or ceiling framing otherwise cracking of the ceiling and joint peaking is expected.

> Excessive vibration of the ceiling (by installing ceiling services, etc) is known to cause jointing cracking and joint peaking.

> Locate ceiling services so they do not cut through ceiling framing members, otherwise some degradation of the ceiling can be expected.

Use the Siniat Reverberation time calculator to assist in determining how much of the ceiling and or wall area should be covered. Alternatively involve an acoustic consultant, especially for very high ceilings and unusually shaped rooms such as those with domed or sloping ceilings.

Siniat Reverberation Time Calculator

Use Siniat's Reverberation Time Calculator by clicking on the link or by using your phone's camera on the QR code.

Framing

Framing members as per framing tables or structural design up to 400mm maximum. Also refer to Section 5.1 for more information on ceiling framing.
For a specific project, determine the relevant wind pressure load on an internal ceiling from Section 2.3, or the QR link below. Wind pressure loads must be considered for internal ceilings to comply with *AS/NZS 1170.2 Wind Actions* and *AS/NZS 2785 Suspended Ceilings - Design and Installation.*
Contact Siniat or a structural engineer to check ceiling for earthquake actions. Specific project information is required.
Stagger joins in adjacent Top Cross Rails and Furring Channels by 1200mm minimum.
Install additional framing members around openings.
Downstruts must be installed for Top Cross Rail suspended ceilings in all buildings except air-conditioned hospitals, offices and shopping centres that are effectively sealed where the external walls have non-opening windows. Refer to Downstrut Framing Tables.

Do not fix create**x** directly to timber joists

Siniat Internal Wind Load Calculator

Refer to Section 2.3 for assistance determining the relevant internal wind pressures for a specific project. Or use the Siniat Internal Wind Load Calculator by clicking on the link or by using your phone's camera on the QR code.

Non-Fire Rated
Internal Direct Fix Ceiling Frames

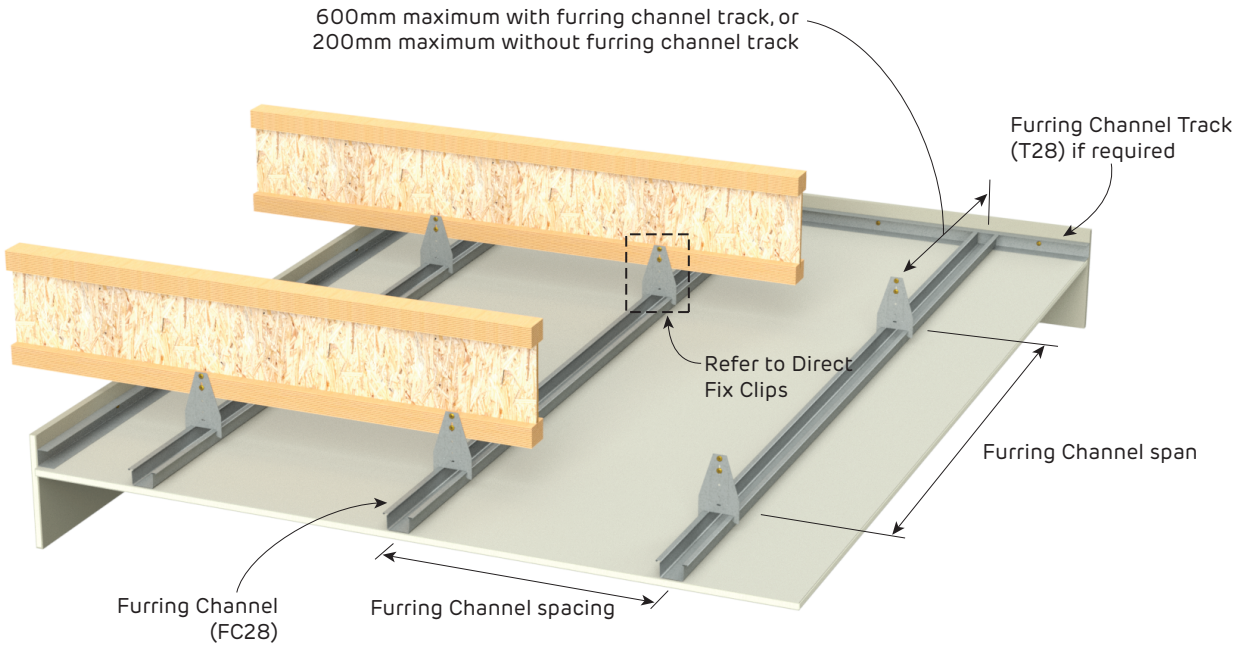

FIGURE 1 Direct Fix Furring Channel Ceiling Frame
Perspective

Details for Single Span, Double Span or 3-or-More Span Ceilings

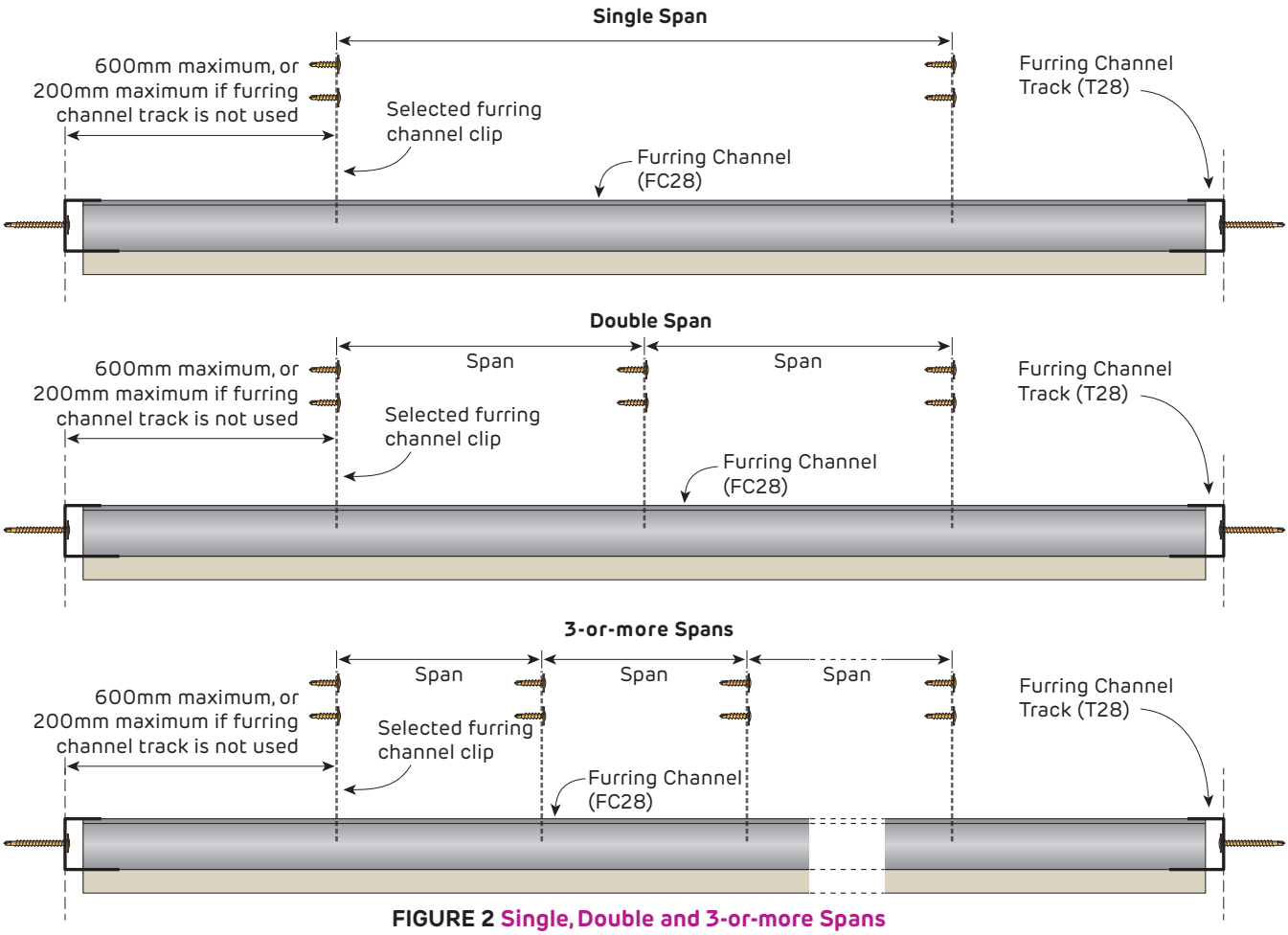

FIGURE 2 Single, Double and 3-or-more Spans
Section

Non-Fire Rated

Typical Direct Fix Clips

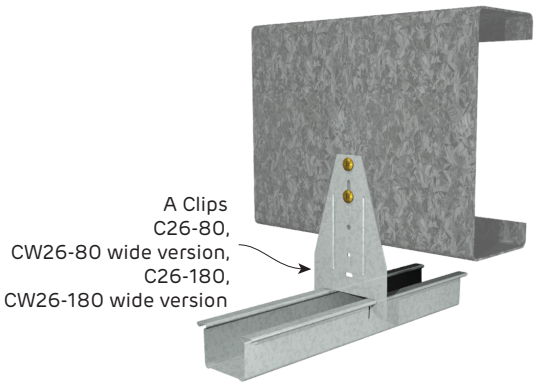

FIGURE 3 A Clip and Furring Channel
Perspective

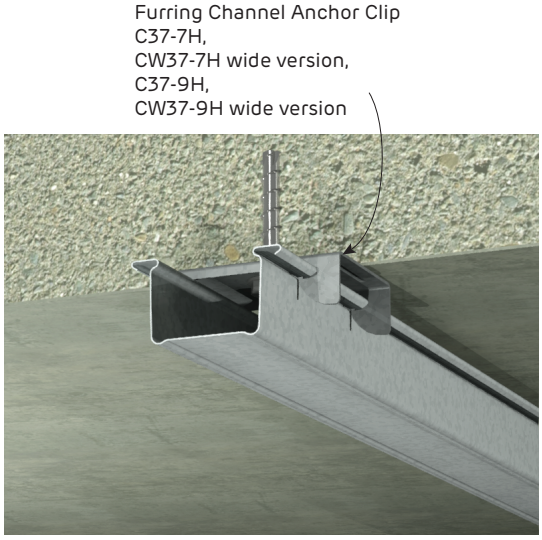

FIGURE 4 Anchor Clip and Furring Channel
Perspective

Direct fixing clips may generate noise when fixed to materials subject to daily thermal expansion and contraction

Table 1 28mm Furring Channel Ceiling Span Table

Refer to Section 2.3 for assistance determining the relevant wind pressures for a specific project.

28mm Furring Channel (AFC28) Ceiling Span Table Furring channels at 400mm maximum spacing						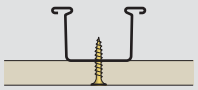
Wind Region	**Ultimate Wind Pressure W_u (kPa)**	**Serviceability Wind Pressure W_s (kPa)**	**Single Span**		**2 or more Spans**	
			Maximum Span (mm)	Connection Demand (kN)	Maximum Span (mm)	Connection Demand (kN)
REGION A	0.39	0.25	1350	0.15	1670	0.47
	0.47	0.3	1270	0.16	1570	0.50
	0.54	0.35	1200	0.17	1490	0.53
REGION B	0.59	0.25	1350	0.20	1670	0.63
	0.71	0.3	1270	0.22	1570	0.69
	0.83	0.35	1200	0.24	1490	0.74

1. Table based upon downward (suction) and upward (uplift) pressures, intended for internal use only.
2. Table includes self weight and 2 kg/m^2 insulation weight with an additional 3 kg/m^2 service load. No further allowance for additional point loads or live loads.
3. Contact Siniat or a structural engineer to check ceiling for earthquake actions. Specific project information is required.
4. Table refers to Siniat Furring Channel of Base Metal Thickness (BMT) 0.42mm of grade G550 steel with Zincalume™ AM150 corrosion protection. Maximum production lengths available are 6.0m
5. Designed in accordance with *AS/NZS 4600:2018 Cold Formed Steel Structures* and *AS/NZS 2785:2000 Suspended Ceilings - Design and Installation.*
6. Wind pressures determined in accordance with *AS/NZS 1170.2 Wind Actions.*
7. Connections to clips must be checked with the *Clip Capacity Table* in Section 5.1.
8. Ultimate Limit State Load Case 1: 1.2G + Wu (Suction) + $Q_{0.03kPa\ Service\ Load}$
   Ultimate Limit State Load Case 2: 0.9G + Wu (Uplift).
9. Serviceability Limit State Load Case 1: G, with deflection limited to Span/500.
   Serviceability Limit State Load Case 2: Ws, with deflection limited to Span/360.
10. Perimeter anchors at 600mm maximum centres and 100mm maximum from track ends with minimum 0.7 kN shear capacity.
11. The nominated lateral pressures and deflection limits must be checked for suitability for a specific project.
12. For BCA Building Importance Level 4, please contact Siniat.

Non-Fire Rated

Internal Suspended Ceiling Frames

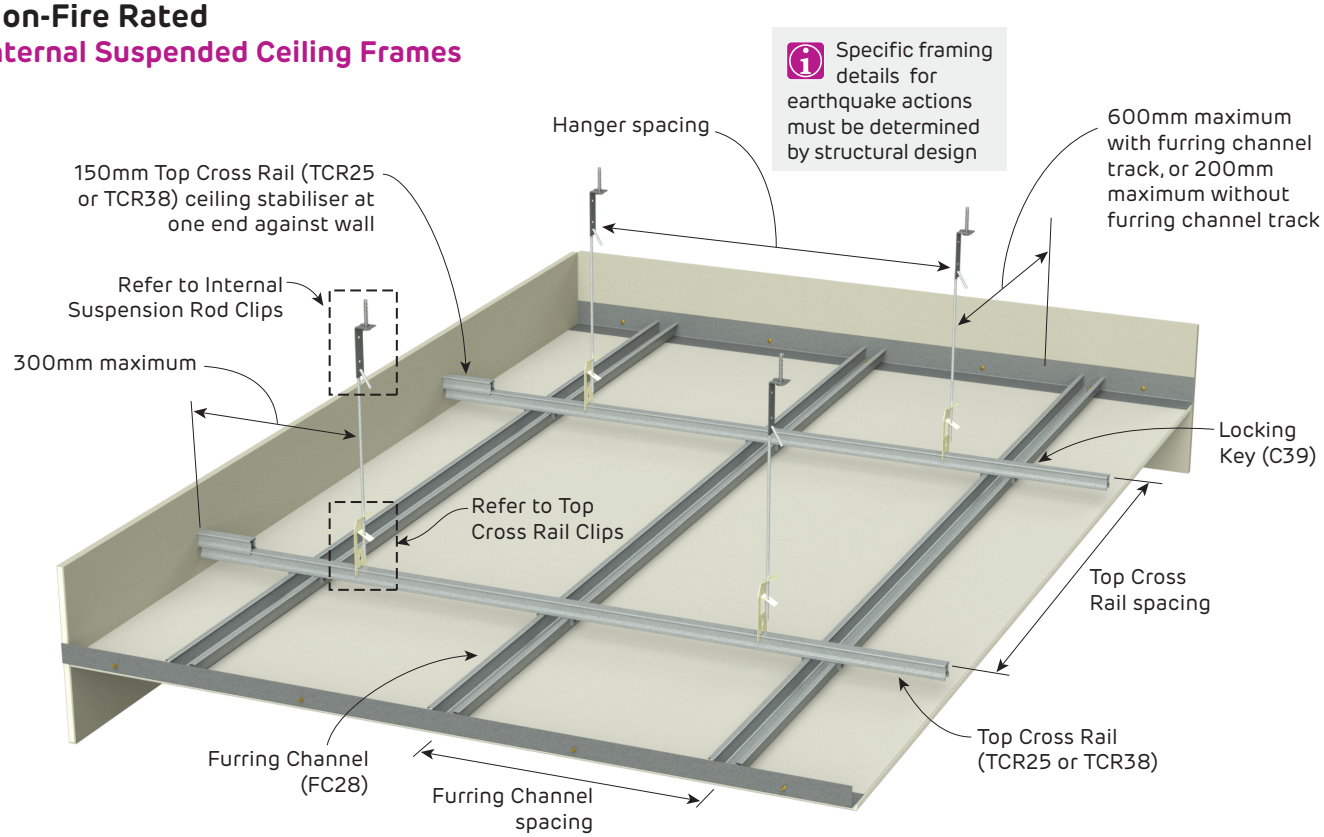

FIGURE 5 Suspended Ceiling Frame
Perspective

Details for Single Span, Double Span or 3-or-More Span Ceilings

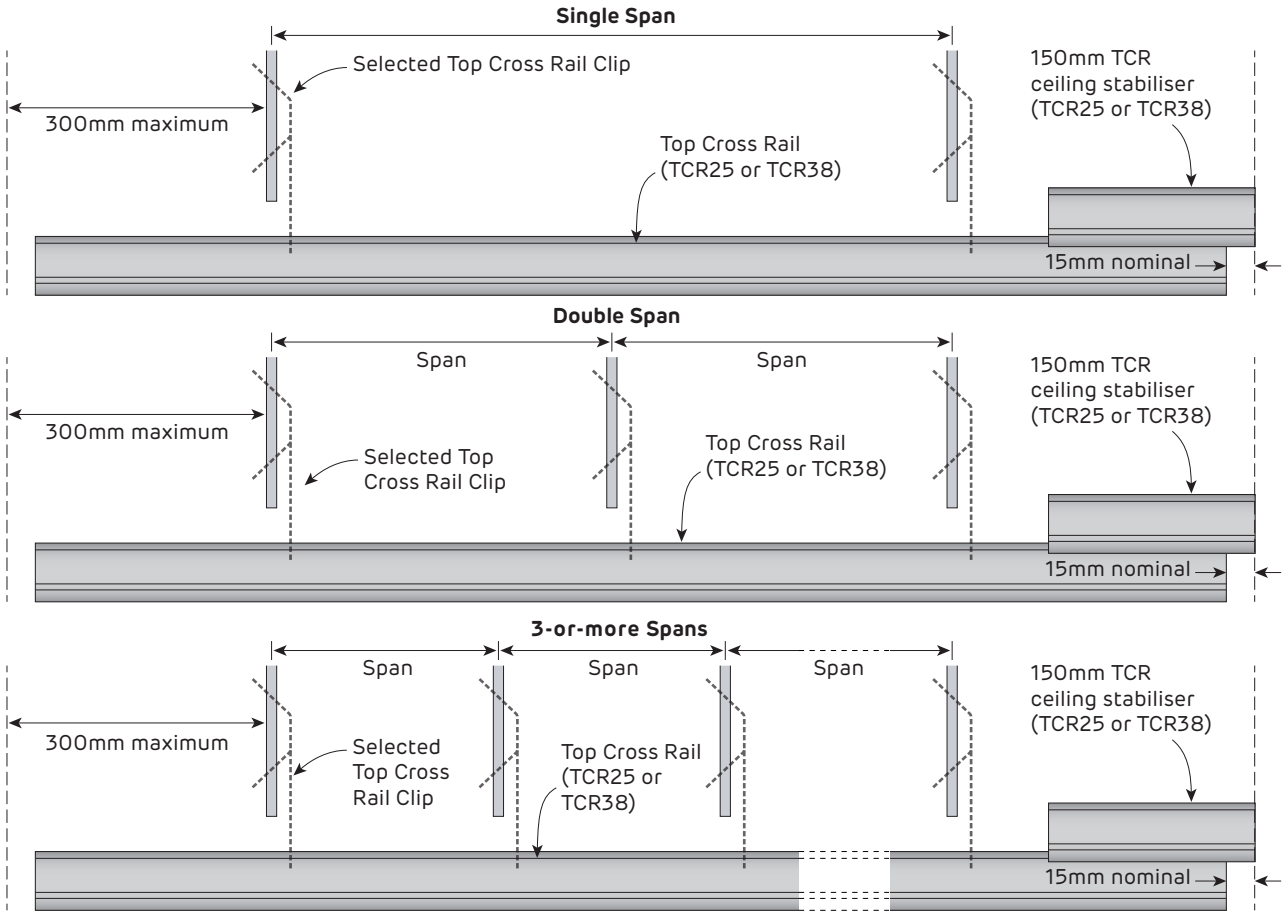

FIGURE 6 Top Cross Rail - Single, Double and 3-or-more Spans
Section

Non-Fire Rated

Typical Suspension Rod Clips

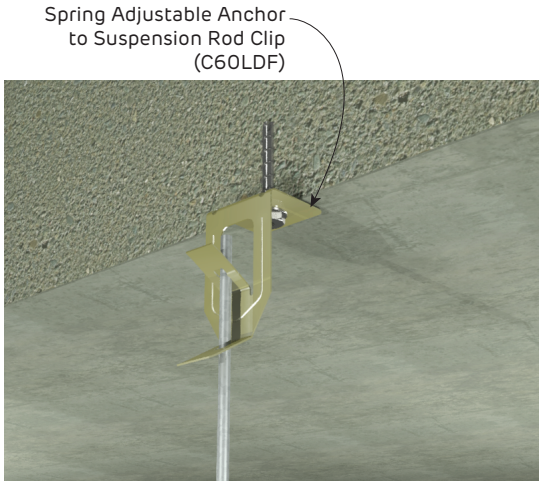

FIGURE 7 Spring Adjustable Direct Fix Clip to Concrete
Perspective

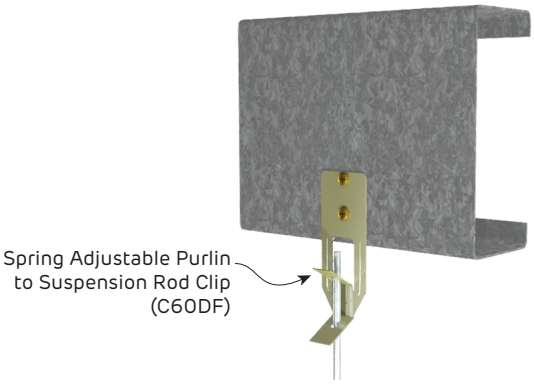

FIGURE 8 Spring Adjustable Direct Fix Clip to Purlin
Perspective

Typical Top Cross Rail Clips

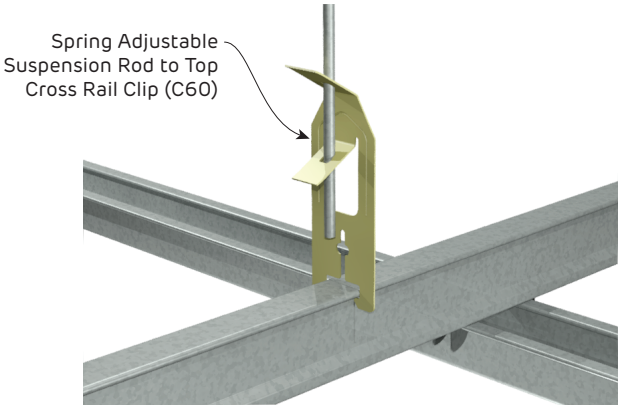

FIGURE 9 Spring Adjustable Suspension Rod to TCR Clip
Perspective and Sections

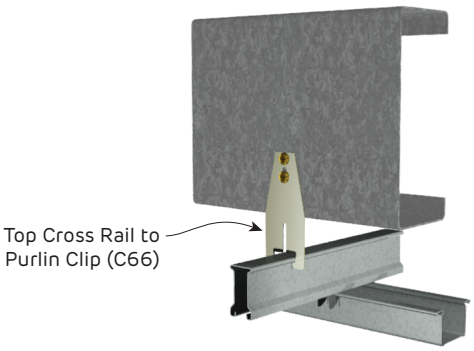

FIGURE 10 Top Cross Rail Direct Fix Clip to Purlin
Perspective and Sections

Locking Key

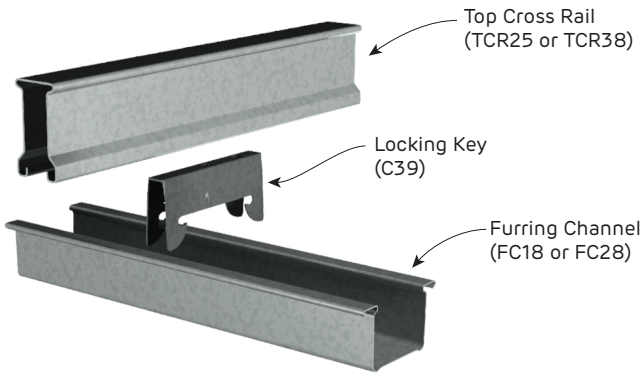

FIGURE 11 Locking Key
Perspective

Table 2 Top Cross Rail Ceiling Span Table - REGION A

Refer to Section 2.3 for assistance determining the relevant wind pressures for a specific project.

Top Cross Rail Span Table Suspended ceiling lined with Createx and 28mm Furring channels (AFC28) at 400mm maximum spacing				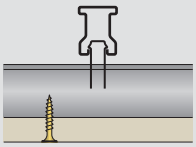		Up to BCA Building Importance Level 3	
Ultimate Wind Pressure W_u (kPa)	**Serviceability Wind Pressure W_s (kPa)**	**Top Cross Rail**	**Top Cross Rail Spacing (mm)**	**Double Span**		**3 or more Spans**	
				Hanger Spacing (mm)	Hanger Demand (kN)	Hanger Spacing (mm)	Hanger Demand (kN)
0.39	0.25	TCR25	900	1060	1.04	1150	1.03
			1050	980	1.12	1060	1.11
			1200	920	1.20	990	1.18
		TCR38	900	1270	1.24	1370	1.23
			1050	1170	1.34	1270	1.33
			1200	1100	1.43	1200	1.42
0.47	0.3	TCR25	900	1000	1.11	1080	1.10
			1050	920	1.19	1000	1.19
			1200	860	1.28	930	1.26
		TCR38	900	1190	1.32	1290	1.31
			1050	1100	1.43	1190	1.41
			1200	1030	1.53	1110	1.51
0.54	0.35	TCR25	900	950	1.17	1020	1.15
			1050	880	1.26	950	1.25
			1200	820	1.35	890	1.34
		TCR38	900	1130	1.39	1220	1.37
			1050	1050	1.51	1130	1.48
			1200	980	1.61	1060	1.59

1. Table based upon downward (suction) and upward (uplift) pressures, intended for internal use only. Down-struts are required for uplift.
2. Table includes self weight and 1 kg/m^2 insulation weight with an additional 3 kg/m^2 service load. No further allowance for additional point loads or live loads.
3. Downstruts must be installed for TCR suspended ceilings in all buildings except air-conditioned hospitals, offices and shopping centres that are effectively sealed where the external walls have non-opening windows.
4. Contact Siniat or a structural engineer to check ceiling for earthquake actions. Specific project information is required.
5. Table refers to Siniat Furring Channels of 0.42mm Base Metal Thickness (BMT) of grade G550 steel and Siniat Top Cross Rails of 0.75mm BMT of grade G300, both with Zincalume™ AM150 corrosion protection. Maximum production lengths available are 6.0m
6. Furring Channels checked for 2-or-more spans only. If required, contact Siniat for Single Span furring channel check.
7. Designed in accordance with *AS/NZS 4600:2018 Cold Formed Steel Structures* and *AS/NZS 2785:2000 Suspended Ceilings - Design and Installation.*
8. Wind pressures determined in accordance with *AS/NZS 1170.2 Wind Actions.*
9. Connections to clips must be checked with the *Clip Capacity Table* in Section 5.1.
10. Ultimate Limit State Load Case 1: 1.2G + Wu (Suction) + $Q_{0.03kPa\ Service\ Load}$
    Ultimate Limit State Load Case 2: 0.9G + Wu (Uplift).
11. Serviceability Limit State Load Case 1: G, with deflection limited to Span/500.
12. Serviceability Limit State Load Case 2: G + Ws, with deflection limited to Span/200.
13. Perimeter anchors at 600mm maximum centres and 100mm maximum from track ends with minimum 0.7 kN shear capacity.
14. The nominated lateral pressures and deflection limits must be checked for suitability for a specific project.
15. For BCA Building Importance Level 4, please contact Siniat.

Table 3 Top Cross Rail Ceiling Span Table - REGION B

Refer to Section 2.3 for assistance determining the relevant wind pressures for a specific project.

Top Cross Rail Span Table Suspended ceiling lined with Createx and 28mm Furring channels (AFC28) at 400mm maximum spacing				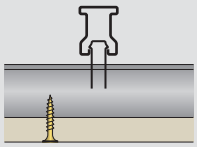		Up to BCA Building Importance Level 3	
Ultimate Wind Pressure W_u (kPa)	**Serviceability Wind Pressure W_s (kPa)**	**Top Cross Rail**	**Top Cross Rail Spacing (mm)**	**Double Span**		**3 or more Spans**	
				Hanger Spacing (mm)	Hanger Demand (kN)	Hanger Spacing (mm)	Hanger Demand (kN)
0.59	0.25	TCR25	900	910	1.20	990	1.19
			1050	850	1.30	920	1.29
			1200	790	1.39	860	1.38
		TCR38	900	1090	1.43	1180	1.42
			1050	1010	1.55	1090	1.53
			1200	950	1.67	1020	1.64
0.71	0.3	TCR25	900	850	1.29	920	1.28
			1050	790	1.40	850	1.38
			1200	740	1.50	800	1.48
		TCR38	900	1020	1.55	1100	1.53
			1050	940	1.66	1020	1.65
			1200	860	1.74	950	1.76
0.83	0.35	TCR25	900	800	1.38	860	1.35
			1050	740	1.49	800	1.47
			1200	690	1.58	750	1.57
		TCR38	900	960	1.65	1030	1.62
			1050	870	1.75	950	1.74
			1200	760	1.74	830	1.74

1. Table based upon downward (suction) and upward (uplift) pressures, intended for internal use only. Down-struts are required for uplift.
2. Table includes self weight and 1 kg/m^2 insulation weight with an additional 3 kg/m^2 service load. No further allowance for additional point loads or live loads.
3. Downstruts must be installed for TCR suspended ceilings in all buildings except air-conditioned hospitals, offices and shopping centres that are effectively sealed where the external walls have non-opening windows.
4. Contact Siniat or a structural engineer to check ceiling for earthquake actions. Specific project information is required.
5. Table refers to Siniat Furring Channels of 0.42mm Base Metal Thickness (BMT) of grade G550 steel and Siniat Top Cross Rails of 0.75mm BMT of grade G300, both with Zincalume™ AM150 corrosion protection. Maximum production lengths available are 6.0m
6. Furring Channels checked for 2-or-more spans only. If required, contact Siniat for Single Span furring channel check.
7. Designed in accordance with *AS/NZS 4600:2018 Cold Formed Steel Structures* and *AS/NZS 2785:2000 Suspended Ceilings - Design and Installation.*
8. Wind pressures determined in accordance with *AS/NZS 1170.2 Wind Actions.*
9. Connections to clips must be checked with the *Clip Capacity Table* in Section 5.1.
10. Ultimate Limit State Load Case 1: 1.2G + Wu (Suction) + $Q_{0.03kPa\ Service\ Load}$
    Ultimate Limit State Load Case 2: 0.9G + Wu (Uplift).
11. Serviceability Limit State Load Case 1: G, with deflection limited to Span/500.
12. Serviceability Limit State Load Case 2: G + Ws, with deflection limited to Span/200.
13. Perimeter anchors at 600mm maximum centres and 100mm maximum from track ends with minimum 0.7 kN shear capacity.
14. The nominated lateral pressures and deflection limits must be checked for suitability for a specific project.
15. For BCA Building Importance Level 4, please contact Siniat.

Downstrut

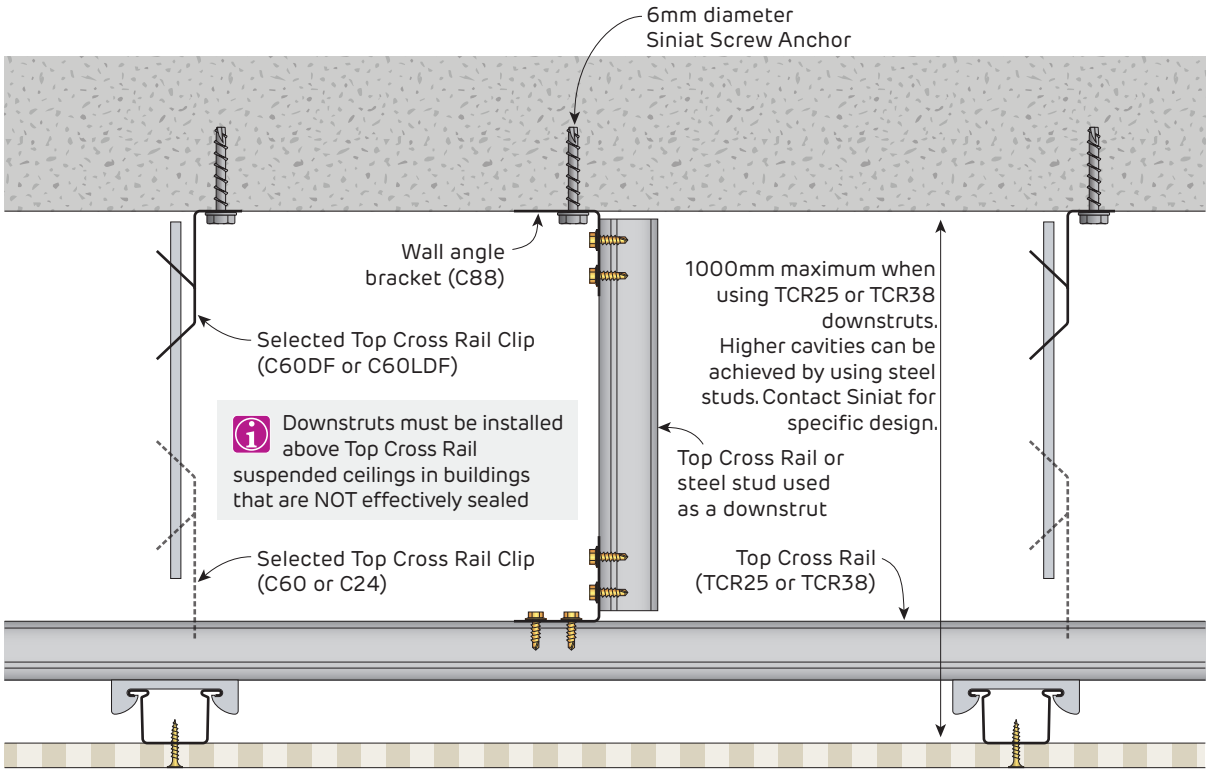

FIGURE 12 Downstrut
Section

Table 4 Downstrut Table - REGION A

Refer to Section 2.3 for assistance determining the relevant wind pressures for a specific project.

Downstrut Interval Table (along Top Cross Rail) Suspended ceiling lined with Createx and 28mm Furring channels (AFC28) at 400mm maximum spacing				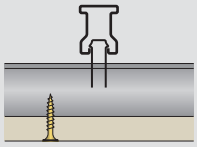	Up to BCA Building Importance Level 3
Ultimate Wind Pressure W_u (kPa)	**Serviceability Wind Pressure W_s (kPa)**	**Top Cross Rail**	**Top Cross Rail Spacing (mm)**	**Double Span**	**3 or more Spans**
				Maximum Downstrut Intervals (mm)	Maximum Downstrut Intervals (mm)
0.39	0.25	TCR25	900	1570	1670
			1050	1470	1570
			1200	1400	1490
		TCR38	900	1960	2070
			1050	1860	1960
			1200	1780	1870
0.47	0.3	TCR25	900	1430	1530
			1050	1340	1430
			1200	1260	1350
		TCR38	900	1820	1920
			1050	1720	1780
			1200	1630	1670
0.54	0.35	TCR25	900	1330	1430
			1050	1250	1330
			1200	1180	1260
		TCR38	900	1330	1770
			1050	1250	1640
			1200	1180	1540

1. Downstruts must be installed for TCR suspended ceilings in all buildings except air-conditioned hospitals, offices and shopping centres that are effectively sealed where the external walls have non-opening windows.

Table 5 Downstrut Table - REGION B

Refer to Section 2.3 for assistance determining the relevant wind pressures for a specific project.

Downstrut Interval Table (along Top Cross Rail) Suspended ceiling lined with Createx and 28mm Furring channels (AFC28) at 400mm maximum spacing				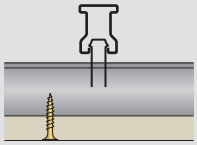	Up to BCA Building Importance Level 3
Ultimate Wind Pressure W_U (kPa)	**Serviceability Wind Pressure W_S (kPa)**	**Top Cross Rail**	**Top Cross Rail Spacing (mm)**	**Double Span** Maximum Downstrut Intervals (mm)	**3 or more Spans** Maximum Downstrut Intervals (mm)
0.59	0.25	TCR25	900	1280	1360
			1050	1190	1280
			1200	1120	1200
		TCR38	900	1650	1690
			1050	1550	1560
			1200	1470	1460
0.71	0.3	TCR25	900	1160	1100
			1050	1090	1160
			1200	1020	1100
		TCR38	900	1520	1520
			1050	1410	1400
			1200	1230	1310
0.83	0.35	TCR25	900	1080	1150
			1050	1000	1080
			1200	930	1010
		TCR38	900	1380	1390
			1050	1180	1290
			1200	1030	1130

1. Downstruts must be installed for TCR suspended ceilings in all buildings except air-conditioned hospitals, offices and shopping centres that are effectively sealed where the external walls have non-opening windows.

Access Panel

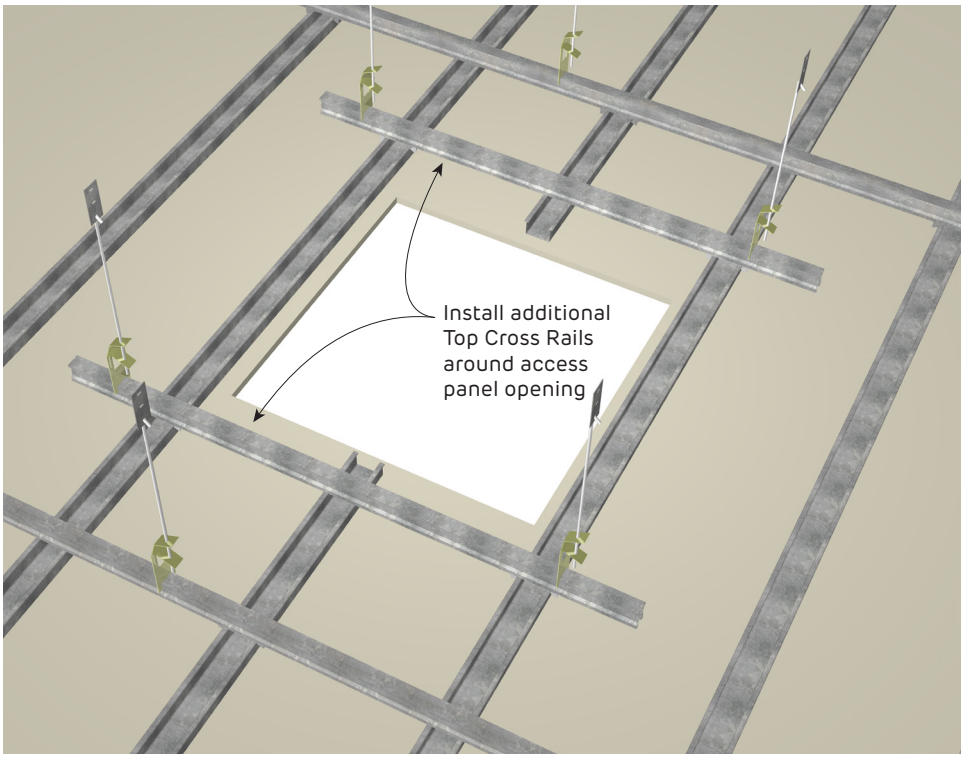

FIGURE 15 Createx Access Panel Framing
Perspective



FIGURE 16 Createx Access Panel Framing
Perspective

Layout

Start sheeting from the centre of the room.
Install **createx** ceilings perpendicular to framing members.
Fix short edges on a Wide-face Furring Channel (F60/28).
Install one entire row in each direction before proceeding. Refer to Figure 17.

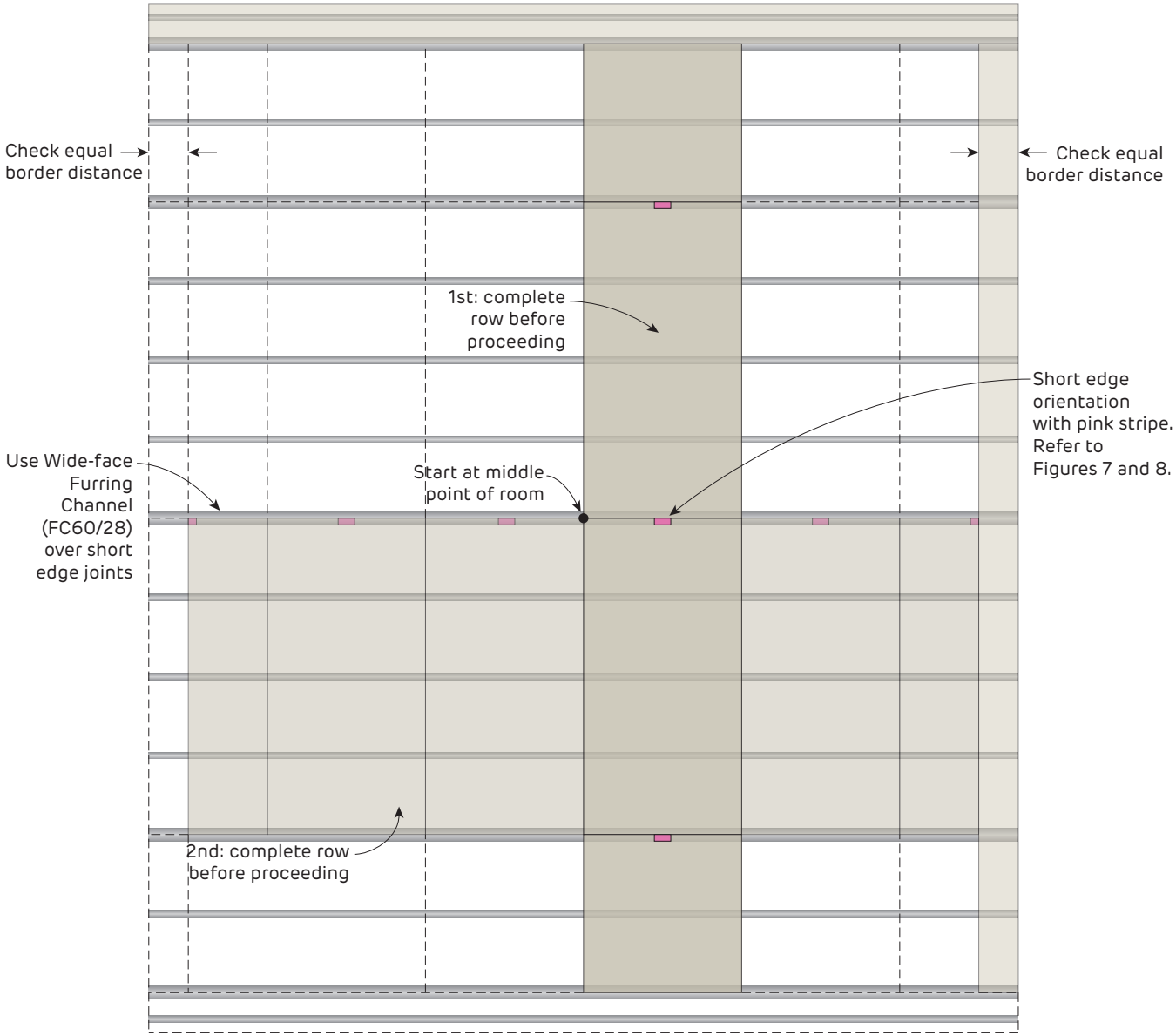

FIGURE 17 Ceiling Layout
Plan

Sheet Orientation Along Short Edges

Align the short edges of createx sheets so that the pink paint stripe does not coincide with each other. Refer to Figure 18 for the correct orientation.

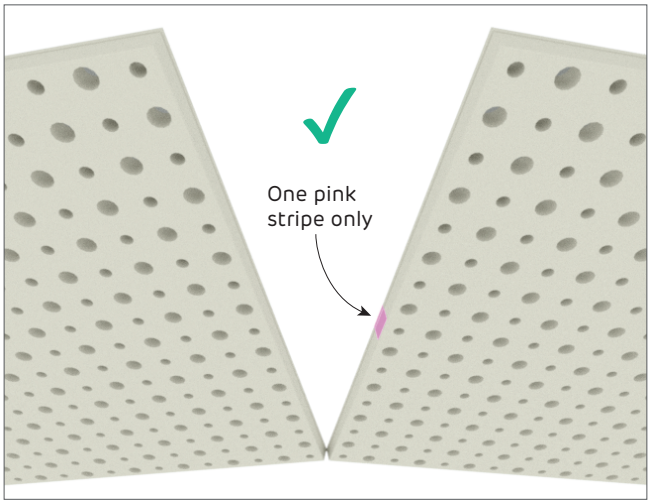

FIGURE 18 Correct Short Edge Orientation
Perspective

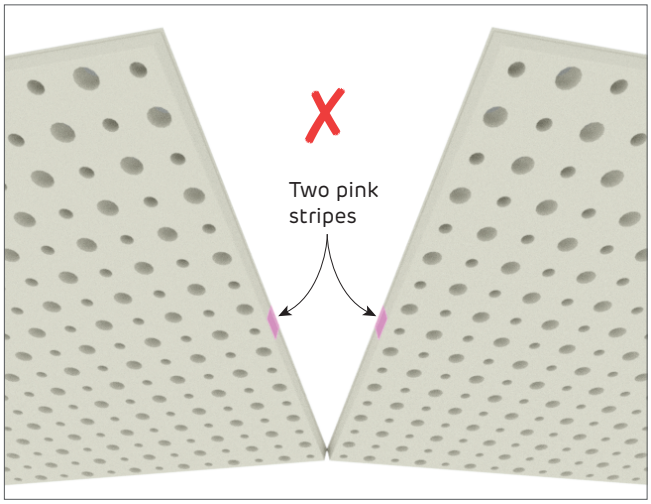

FIGURE 19 Incorrect Short Edge Orientation
Perspective

Perforation Alignment

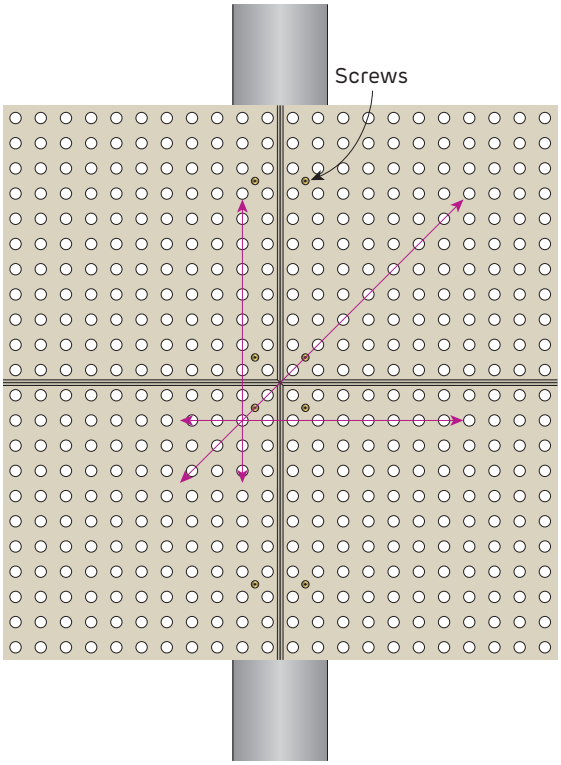

FIGURE 20 Perforation Alignment
Plan

Fixing

Use the 'Screw Only Method'. Adhesive is not permitted.
Drive screws to just below the sheet surface, taking care not to break the paper linerboard. For over-driven screws, install another screw 20mm away. Leave or remove the over-driven screw and patch.
Press createx firmly on to the grid when screwing.
Start fastening from the corner, where the plasterboard meets previously attached boards.
Fasten long edge first and then short edges.
Use a straight edge across adjoining sheets to check both sheets are level across the joints. If necessary, adjust the level of the sheets by unscrewing perimeter screws slightly, so both sheets are level across joints.

Screw Type and Minimum Size for the Installation of Plasterboard to Steel

Plasterboard Thickness	1st Layer
12.5mm	6g x 25mm screw

For steel ≤ 0.75mm BMT, use fine thread needle point screws.
For steel ≥ 0.75mm BMT, use fine thread drill point screws.

FIGURE 21 Createx Internal Ceiling - 1 Layer
Screw Only Method

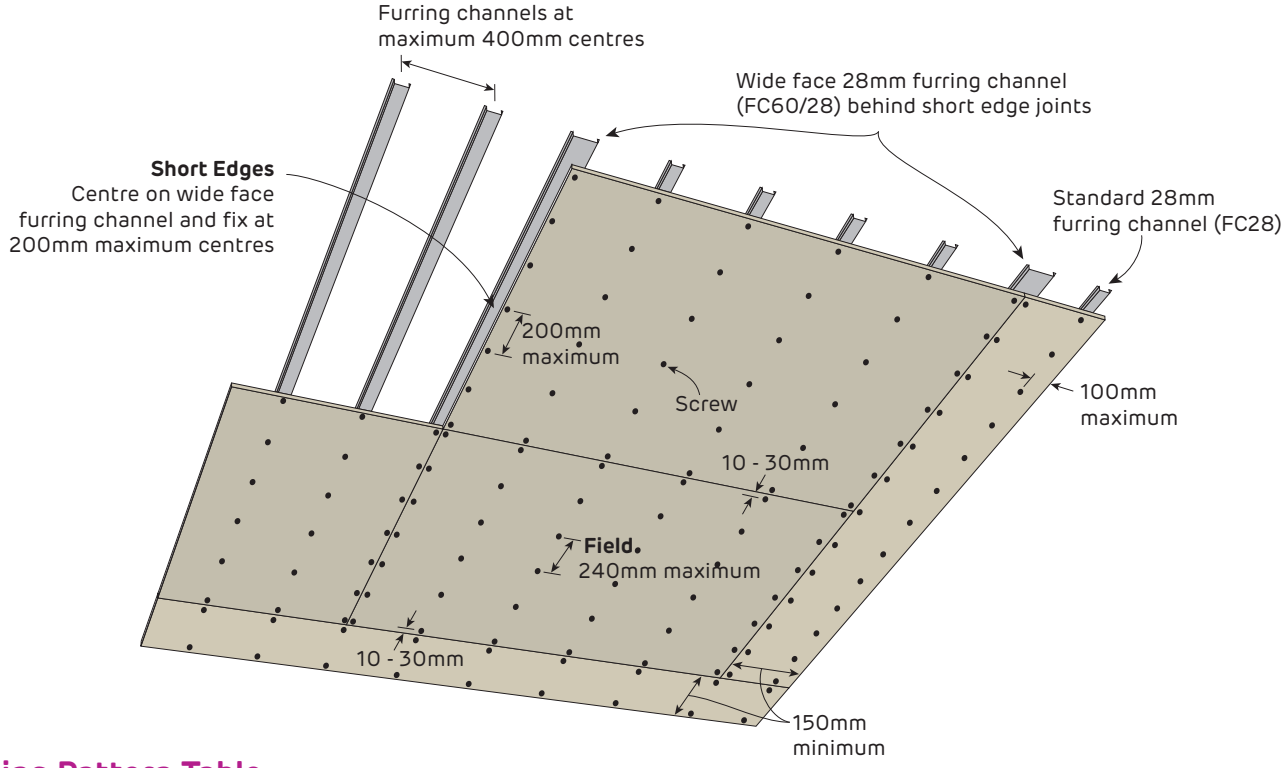

Fixing Pattern Table

Sheet Width	Location	Screw Fixing Pattern
1200mm	Field	S S S S S S (6)
	Short edges (butt joints)	S S S S S S S (7)

S = One screw

Maximum Ultimate Limit State Wind Load Table (kPa)

Plasterboard Thickness	Maximum Ceiling Frame Spacing	
	400mm	300mm
12.5mm	1.50	2.05

1. Calculations do not include the framing which must be independently designed to suit the desired load.
2. Calculations include a ceiling insulation with maximum weight of 1.05 kg/m^2 (equivalent to Pink® Partition 75mm 14kg/m^3 R1.9 Batts).
3. If higher internal wind pressures are expected, please contact Siniat for specific design.

Finishing

Jointing

Jointing must not be conducted until all ceiling services and access panels are installed in the ceiling, otherwise the excessive vibration may cause joint cracking or peaking.
Use a wet brush to clean dust from joints after fixing the boards.
Prime site cut edges with a PVA based primer (ie: one part Bondcrete to four parts water).
Slightly overfill joints with masta**tape-in** jointing compound and allow to dry. It is recommended to use a sausage caulking gun. After allowing to dry (approximately 3 to 5 hours depending on weather conditions but do not leave overnight), scrape off excess jointing compound to level the joint. Refer to Figure 22.
Use masta**lite**, masta**glide**, or masta**line** for finishing joints and screw heads. For more information refer to Section 7.3.
Do not obstruct perforations during jointing.

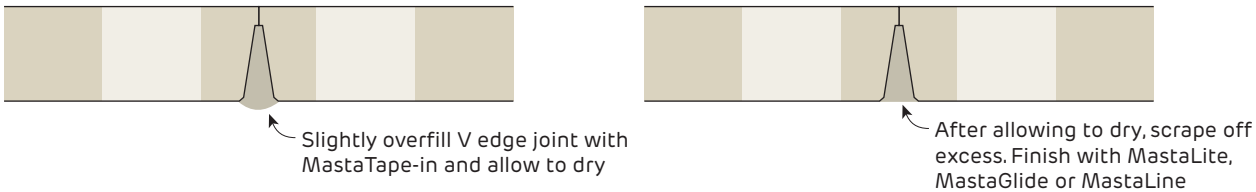

FIGURE 22 V Edge Jointing
Section

Sanding

Sanding is a critical part of achieving a high quality finish. Care should be taken when sanding joints to achieve a smooth surface.
Lightly sand to a smooth even surface using 180 to 220 grit sandpaper or sanding mesh. Care must be taken to not scuff the paper linerboard especially around perforations while sanding.

Painting

A three coat paint system must be applied in accordance with Australian Standard *AS/NZS 2311, Guide to the painting of buildings*. Both the quality of the paint and how it is applied have a large effect on the finished appearance of the crea**tex** plasterboard.
Apply the paint with a short napped roller and avoid the application of excess paint at any time.

> Only use a roller application for painting. Roller application applies a uniform texture over the entire surface and ensures the paint does not fill the perforations or contact the acoustic felt on the back of the plasterboard.

> Spray painting is not permitted.

> For more information on finishing plasterboard refer to Section 7.

Non-Fire Rated

Createx Joints

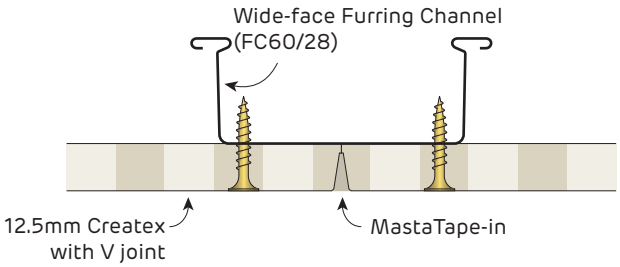

FIGURE 23 Createx with V Joint
Using Wide-face Furring Channel
Section

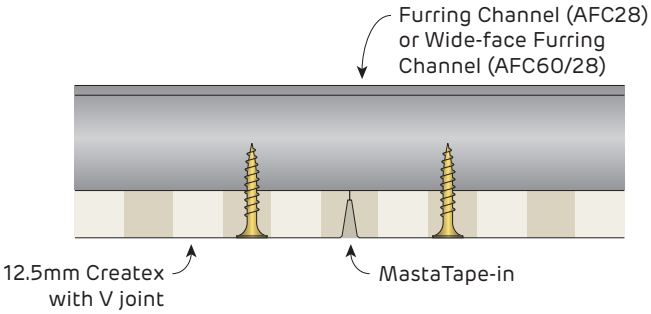

FIGURE 24 Createx with V Joint
Elevation

If necessary, use packers to ensure easy jointing of 12.5mm Createx with 13mm Mastashield

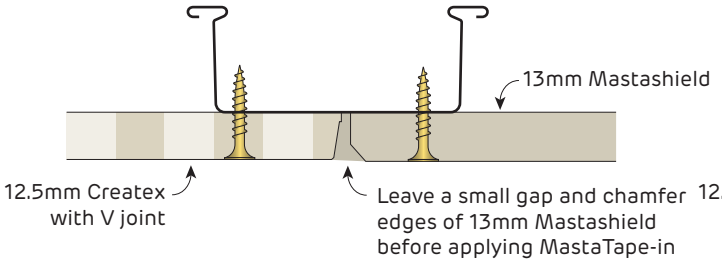

FIGURE 25 Createx to ceiling border
Using Wide-face Furring Channel
Section

Prime any cut edges of Createx and plasterboard with PVA based primer when MastaTape-in is used for jointing

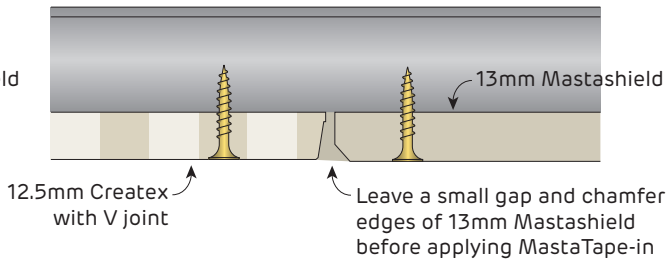

FIGURE 26 Createx to ceiling border
Elevation

Control Joints

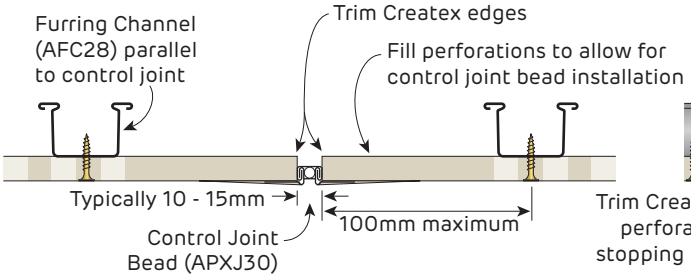

FIGURE 27 Control Joint - Control Joint Bead
Parallel to furring channel
Section

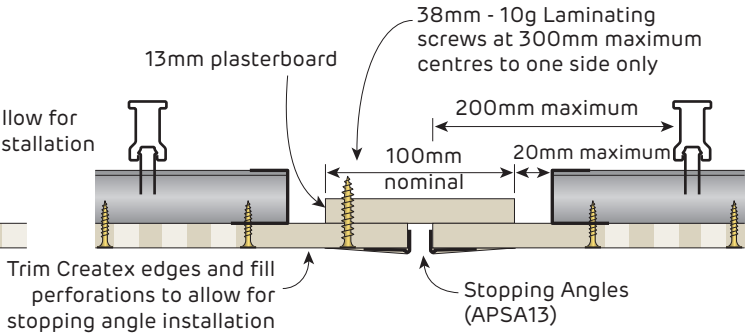

FIGURE 28 Control Joint - Stopping Angles
Perpendicular to furring channel
Section

Non-Fire Rated

Createx Perimeter Details

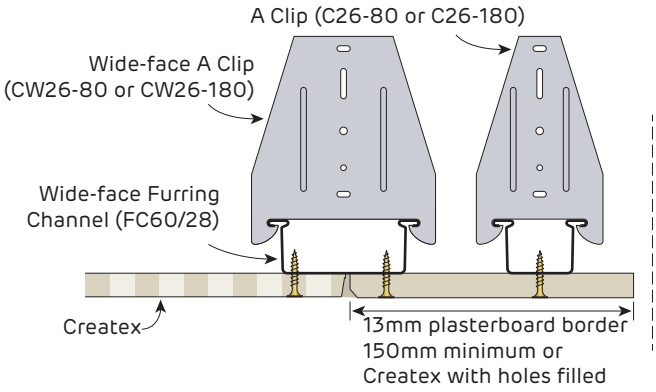

FIGURE 29 Perimeter Detail - Border
Createx Direct Fix Ceiling Frame
Section

The recommended ceiling border detail is to continue the Createx to the wall and fill holes with MastaTape-in and then MastaLite as a finishing coat

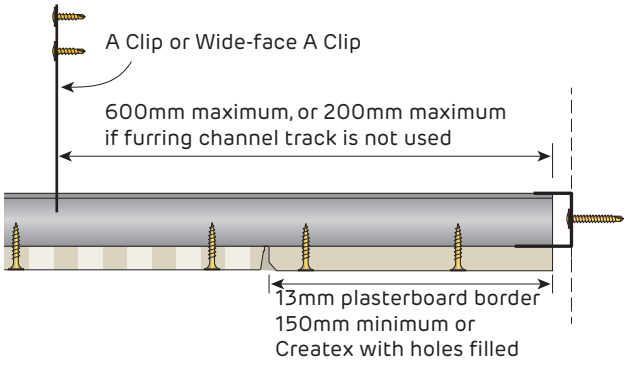

FIGURE 30 Perimeter Detail - Border
Createx Direct Fix Ceiling Frame
Section

If necessary, use packers to ensure easy jointing of 12.5mm Createx with 13mm Mastashield

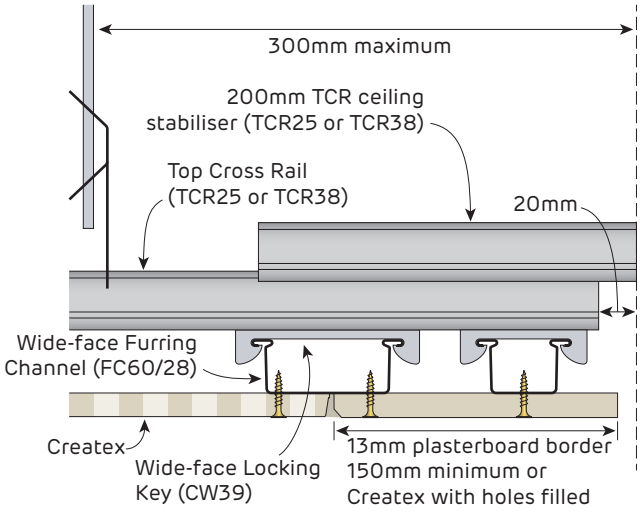

FIGURE 31 Perimeter Detail - Border
Createx Suspended Ceiling Frame
Section

Prime any cut edges of Createx and plasterboard with PVA based primer when MastaTape-in is used for jointing

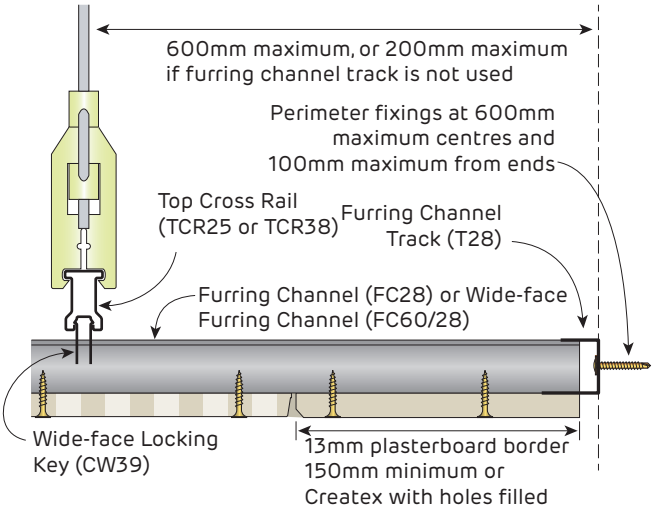

FIGURE 32 Perimeter Detail - Border
Createx Suspended Ceiling Frame
Section

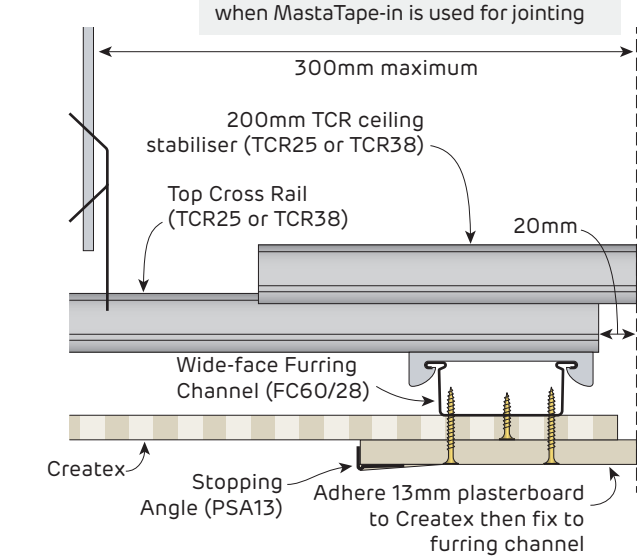

FIGURE 33 Perimeter Detail - Proud Border
Createx Suspended Ceiling Frame
Section

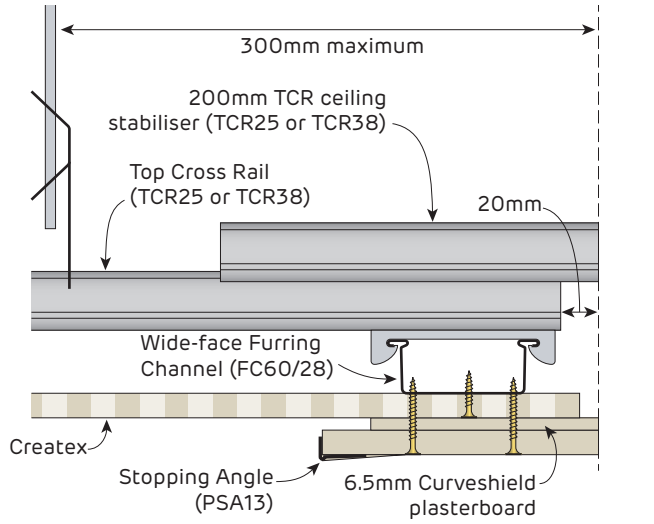

FIGURE 34 Perimeter Detail - Proud Shadow Border
Createx Suspended Ceiling Frame
Section

Non-Fire Rated

Ceiling Perimeter Finishing Details

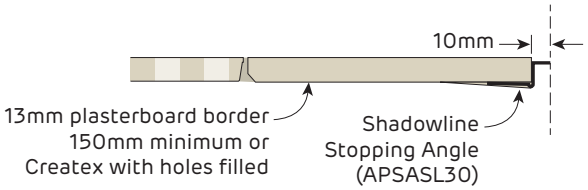

FIGURE 35 Finishing Detail - Shadowline
Section

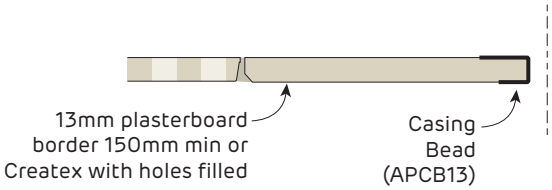

FIGURE 36 Finishing Detail - Casing Bead
Section

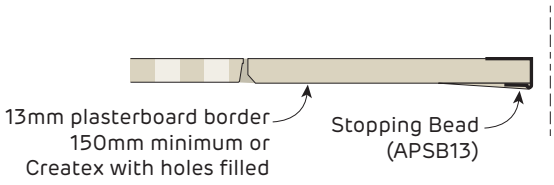

FIGURE 37 Finishing Detail - Stopping Bead
Section

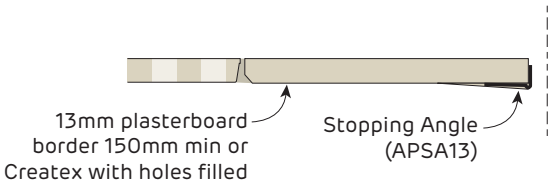

FIGURE 38 Finishing Detail - Stopping Angle
Section

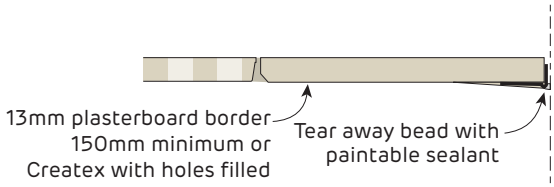

FIGURE 39 Finishing Detail - Tear Away Bead
Section

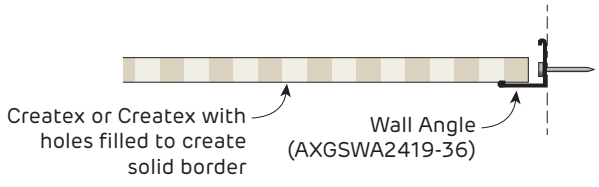

FIGURE 40 Finishing Detail - Wall Angle
Section

Ceilings using a square set finishing detail have low tolerance for building movement and are more prone to cracking and joint peaking

7 Finishing Plasterboard





7.1 LEVELS OF FINISH 708

AUSTRALIAN STANDARD REQUIREMENTS 708

LEVEL 3 FINISH 709

LEVEL 4 FINISH 709

LEVEL 5 FINISH 709

7.2 BACK-BLOCKING 710

BACK-BLOCKING CEILING RECESSED JOINTS 710

BACK-BLOCKING BUTT JOINTS 711

7.3 JOINTING PLASTERBOARD 713

COMPOUNDS 713

THREE COAT JOINTING SYSTEM 714

7.4 CORNICE INSTALLATION 717

7.5 PAINTING PLASTERBOARD 718

AUSTRALIAN STANDARD REQUIREMENTS 718

SEALER UNDERCOAT APPLICATION 718

PAINT APPLICATION 718

7.6 GLANCING LIGHT 719

MINIMISING GLANCING LIGHT 719

7.1 Levels of Finish

Plasterboard is finished using jointing compounds, which are sanded and then painted to achieve an even appearance.

No building lining system has a surface that is perfectly flat and totally free of imperfections. By paying attention to framing, plasterboard sheet orientation, paint finishes and lighting conditions, it is possible to attain the perception of flatness.

Careful workmanship is required at each stage of construction to achieve a high quality finish. If faults are not corrected at the earliest opportunity it may be impossible to disguise them afterwards. In addition, there are some key design principles that should be followed to avoid conditions known to highlight imperfections.

Australian Standard Requirements

The plasterboard installation standard *AS/NZS 2589:2017, Gypsum linings – Application and finishing*, refers to three 'Levels of Finish' (Levels 3, 4 and 5). The standard nominates Level 4 as the default finish unless otherwise specified.

Installation in accordance with Siniat instructions will achieve a Level 4 Finish.

Framing Requirements for Each Level of Finish

Australian Standard 2589 defines allowable deviations in the flatness of the framing surface to achieve the required level of finish. Framing members must have a minimum fixing face width of 32mm for screw fixing and 35mm for nail fixing. Framing should be true, plumb and level. Before installing plasterboard, the frame must be flat enough for the required level of finish. Over a 1.8m straight edge the frame must not deviate more than the values listed in Table 1.

Level 3 Finish

A Level 3 Finish is recommended where no decoration is required such as walls above ceilings and concealed storage areas. The requirements for a Level 3 Finish are:

- Framing as per the requirements in Table 1
- A bedding coat and second coat on all face layer joints and corners.

Level 4 Finish

Level 4 is the default finish and is recommended for most applications when lighting is favourable and light colour, matt or low sheen paints are used. The requirements for a Level 4 Finish are:

- Framing and back-blocking as per the requirements in Table 1
- Face layer joints finished as detailed in Section 7.3 Three Coat Jointing System
- A quality three coat paint system as detailed in Section 7.5 Painting Plasterboard.

Level 5 Finish

A Level 5 Finish is the highest level of finish defined in the Australian Standard. Installation of the frame and plasterboard, finishing with compounds and the correct application of paint all contribute to a Level 5 Finish. Even if completed correctly, a Level 5 Finish may not result in all surface deviations being concealed, only minimised.

A Level 5 Finish is recommended where gloss, semi-gloss or dark colour paints are used, or in harsh or critical lighting conditions which are referred to as glancing light.Higher standards are required for frame flatness, jointing and back-blocking. It involves coating the entire wall or ceiling to provide an even surface texture and porosity, which helps conceal joints and fixing points. The coating may be sprayed, rolled or trowelled over the surface.

The requirements for a Level 5 Finish are:

- Framing as per requirements in Table 1
- Back-blocking of all ceiling joints and wall butt joints
- Joints finished as detailed in Section 7.3 Three Coat Jointing System
- Application of an additional coating over the entire surface to provide uniform texture and porosity
- A quality three coat paint system as detailed in Section 7.5 Painting Plasterboard.

For a premium Level 4 Finish use **opal**.

Table 1 Level of Finish Requirements for Non-Fire Rated Systems

Level of Finish Requirements	Level 3	Level 4	Level 5
Back-block recessed joints on ceilings with 3 or more recessed joints	Optional	✓[1]	✓
Back-block recessed joints on ceilings with less than 3 recessed joints	Optional	Optional [1]	✓
Ceiling butt joints permitted on framing members	✓	✗[2]	✗[2]
Wall butt joints permitted on framing members	✓	✗[2]	✗[2]
Minimum number of coats for jointing	2	3	3 plus skim coat
Maximum frame deviation of 90% of area (mm) [3]	4	4	3
Maximum frame deviation of remaining area (mm) [3]	5	5	4

1. Back-blocking not required for recessed joints on suspended ceiling with no rigid connection at wall/ceiling junction.
2. Back-blocking is required on these joints. [For more information, Refer to Section 7.2]
3. Over a 1.8m straight edge the frame must not deviate by more than these values.

7.2 Back-Blocking

Back-blocking is a method for reinforcing plasterboard joints to minimise joint cracking and peaking.

Back-blocked joints use strips of plasterboard adhered to the back of the joint between the framing members. backblocking adhesive must be set before commencing jointing.

Table 2 Back Blocking Requirements

Back Blocking Requirements	
Butt joints not made on a framing member	✓
Ceiling joints in balconies and breezeways	✓
Joints using masta**line**, masta**lite** or masta**coat3** for all three coats except those made over a framing member	✓
Joints using self-adhesive fibreglass tape except those made over a framing member	✓
Joints made over a framing member	✗
Multi-layer systems	✗
Wall butt joints less than 400mm in length and more than 2 metres above the floor	✗

Back-Blocking Ceiling Recessed Joints

It is strongly recommended to back-block all ceiling recessed joints.

Method

- Ensure the back of the plasterboard is free of dust and dirt.
- Cut back-blocking strips 200mm minimum wide and long enough to fit loosely between the framing members with a gap not greater than 30mm at each end.
- Use a notched spreader to apply masta**block** to the back-blocking strips to form 6mm beads at right angles to the joint.
- Apply back-blocking strips firmly to the back of the joint.
- Where there is no access to the back of the ceiling, fix the first ceiling sheet, apply masta**block** to the back-blocking strip and place it midway on the board, then fix the next board.
- Allow masta**block** to set before commencing any jointing.

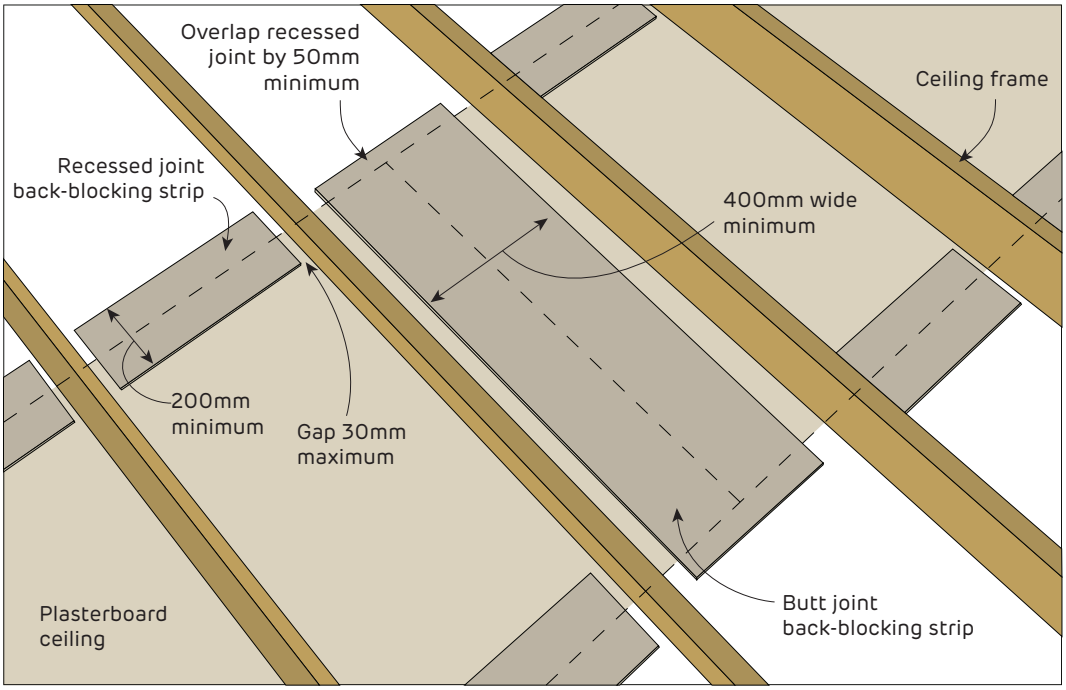

FIGURE 1 Placement of Back-Blocking Strips For Recessed and Butt Joints

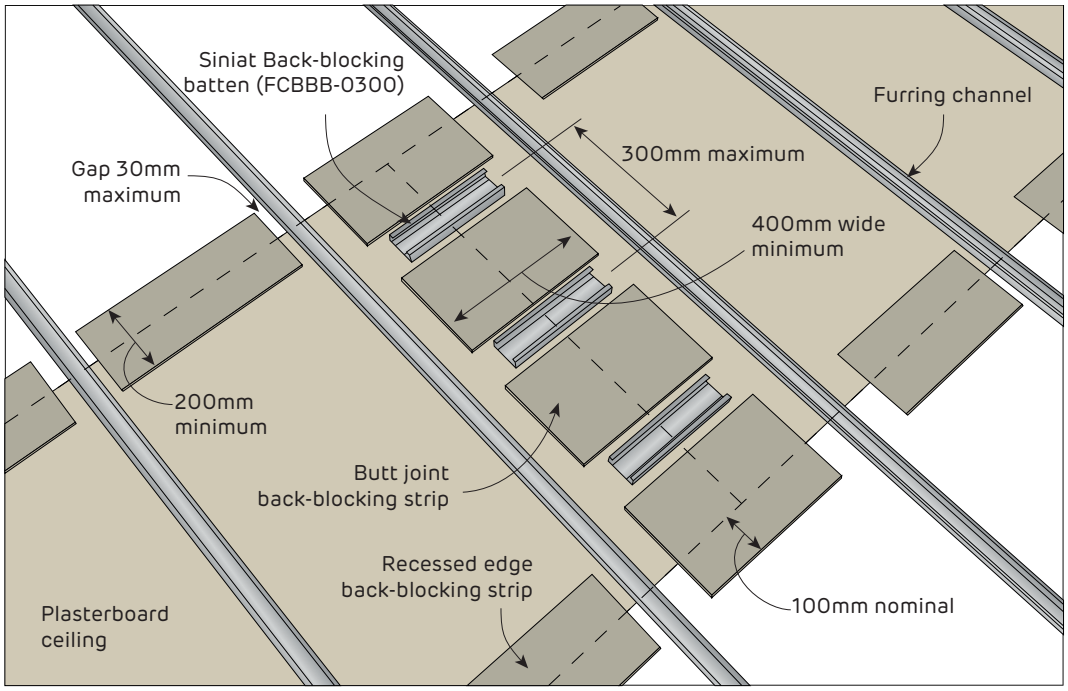

FIGURE 2 Placement of Back-Blocking Batten and Back-Blocking Strips for Recessed and Butt Joints

Back-Blocking Butt Joints

Butt joints are more difficult to conceal than recessed joints so they should be minimised. If butt joints are unavoidable, concealing them can be made easier by creating the joint mid-way between framing members, forming a recess and back-blocking.

Butt joint requirements differ for each level of finish [Refer to Table 1].

Method

- Create a recess by using either back-blocking battens as shown in Figure 3 or packers as shown in Figure 4 and 5.
- Ensure the back of the plasterboard is free of dust and dirt.
- Cut back-blocking strips 400mm minimum wide and long enough to fit loosely between the framing members. Back-blocking strips are to overlap recessed joints by 50mm minimum.
- Wall butt joints need support for the back-blocking strips as shown in Figure 5.
- Use a notched spreader to apply masta**block** to the back-blocking strips to form 6mm beads at right angles to the joint.
- Apply back-blocking strips firmly to the back of the joint.
- Where there is no access to the back of the ceiling, fix the first ceiling sheet. Apply masta**block** to the back-blocking strip and place it midway on the board, then fix the next board.
- Allow masta**block** to set before commencing any jointing.
- Where possible, avoid wall butt joints over single doors and cavity sliding doors to minimise joint cracking from vibration.

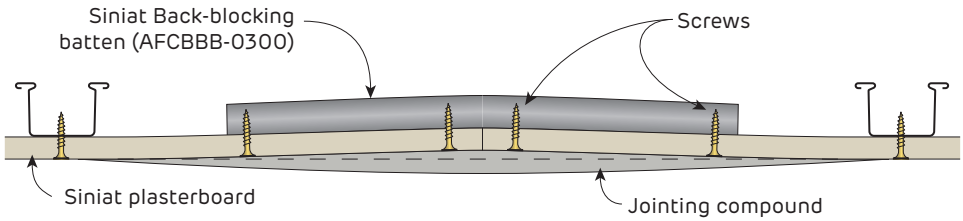

FIGURE 3 **Creating a Recess on a Ceiling Butt Joint using Back-Blocking Battens**
Section

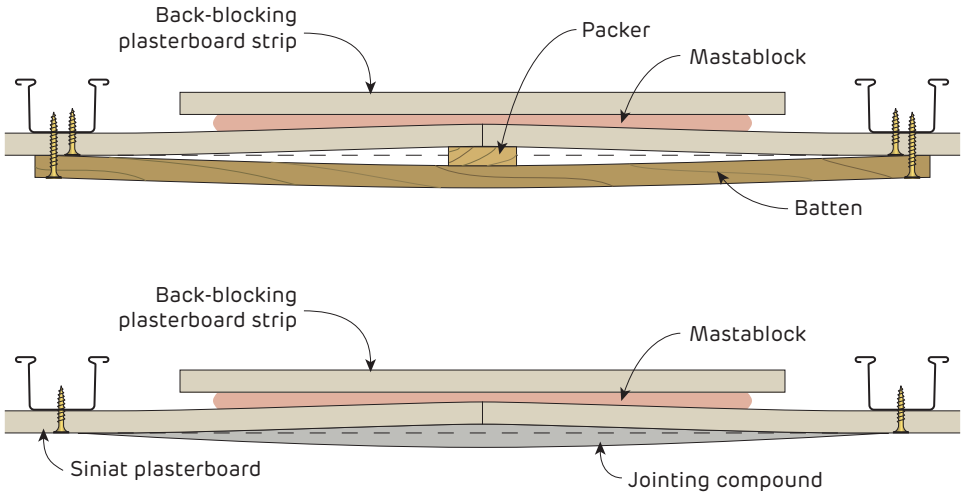

FIGURE 4 **Creating a Recess on a Ceiling Butt Joint using a Temporary Packer**
Sections

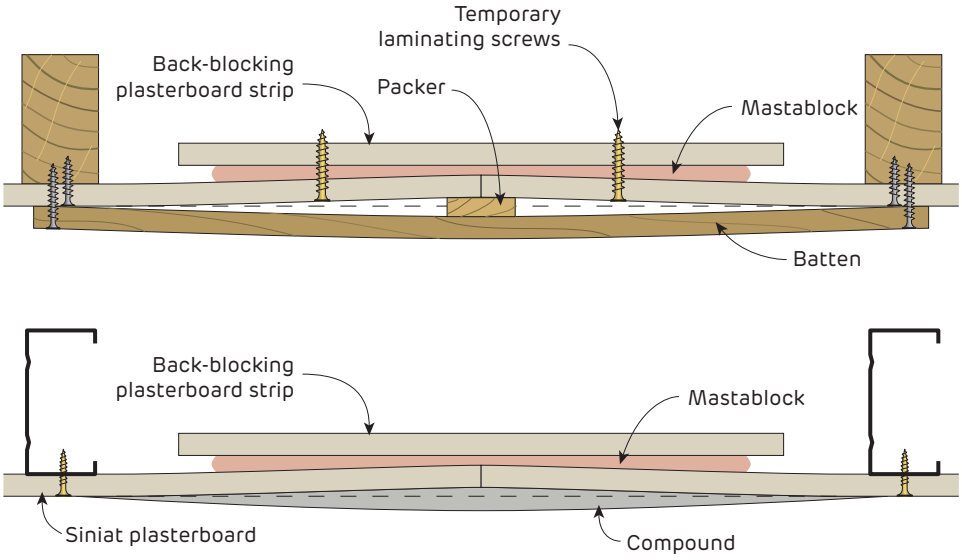

FIGURE 5 **Creating a Recess on a Wall Butt Joint using a Temporary Packer**
Section

7.3 Jointing Plasterboard

Plasterboard walls and ceilings are jointed using compounds and reinforced with paper tape or corner beads.

All joints, internal and external corners and fastener heads must be evenly finished with compounds and lightly sanded to remove tool marks and ridges prior to decoration.

Compounds

Use Siniat compounds with Siniat plasterboard systems. Performance of all systems in this guide rely on using nominated Siniat compounds. Use of non-Siniat compounds may reduce a system's fire rating, appearance or other aspects of performance.

To achieve the FRL, fire rated systems require as a minimum, paper tape and two coats of masta**base**/ masta**longset** or three coats of any Siniat all purpose air-drying compound. Alternatively use **bindex** fire and acoustic sealant as permitted and detailed in the Bindex Product Data Sheet.

Joints in wet areas must use paper tape. Areas to be tiled must only use masta**base** or masta**longset**. Multi-layer systems only require face layer joints to be set, except GIB X-Block systems where all layers must be set.

There are two types of products used for jointing plasterboard: chemical setting compounds and air-drying compounds.

Chemical Setting Compounds

Chemical setting compounds are plaster based, supplied in powder form and when combined with water harden by chemical reaction. They create the strongest joint. Chemical setting compounds can be completely set but still damp. In cold and humid conditions, additional coats of chemical setting compounds can be applied to the joints when the compound is hard but before it is completely dry.

Hot and dry conditions may dry out a setting compound before it sets resulting in reduced strength and tape adhesion issues. Accelerating and retarding additives must not be used as they can also reduce strength. Chemical setting compounds must not be applied over air-drying compounds.

Air-Drying Compounds

Air-drying compounds are premixed and harden by drying out.

Previous coats of air-drying compound or chemical setting compounds must be completely dry before applying the next coat and before sanding.

In cold and humid conditions air-drying compounds may take longer to dry. Ventilation such as open windows or an exhaust fan may be required. Air-drying compounds must not be used in temperatures lower than 10°C.

Table 3 Type and Use of Finishing Compounds

Compound	Type	Application			Wet Areas Under Tiles	Fire Rated Systems
		Bedding	Second	Finish		
Bedding Cements						
masta**base**	Chemical setting powder	✓	✓	✗	✓	✓
masta**longset**	Chemical setting powder	✓	✓	✗	✓	✓
Finishing Compounds						
masta**glide**	Air-drying premixed	✗	✗	✓	✗	✓
All Purpose Compounds						
masta**lite**	Air-drying premixed	✓	✓	✓	✗	✓
masta**line**	Air-drying premixed	✓	✓	✓	✗	✓
box ready masta**line**	Air-drying premixed	✓	✓	✓	✗	✓
masta**tape-in**	Air-drying premixed	✓	✓	✗	✗	✓
masta**coat3**	Air-drying premixed	✓	✓	✓	✗	✓

Three Coat Jointing System

The Three Coat Jointing System consists of a Bedding Coat, a Second Coat and a Finish Coat of compound. Level 4 Finish and Level 5 Finish must use the Three Coat Jointing System for all joints and external corners.

Internal corners only require a Bedding Coat and a Finish Coat.

Bedding (First) Coat

Method

- Fill any gaps more at the joint and allow compound to set or dry
- Using a broadknife, evenly fill the recess with compound [Refer to Figure 10 for minimum coat widths]
- Place tape along the joint and bed it into the compound, removing excess compound and any air bubbles from behind the tape [Refer to Figure 7]
- Apply a skim coat of compound over the tape.

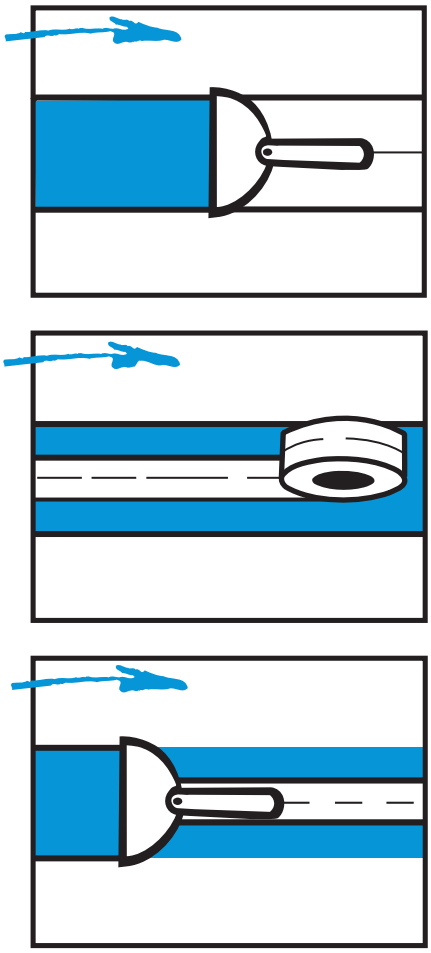

FIGURE 6 Bedding Coat

Second Coat

Method

- Allow the first coat of compound to set or dry
- Using a 200mm trowel to apply a second coat of compound [Refer to Figure 7 and to Figure 10 for minimum coat widths]
- Feather the joint edges to remove excess.

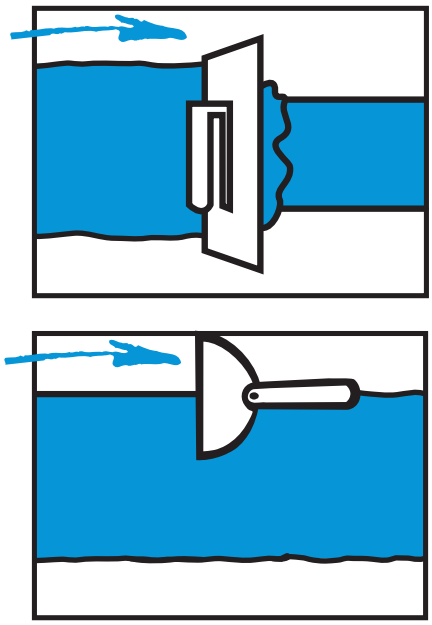

FIGURE 7 Second Coat

- Paper tape is strongly recommended for all joints.
- Joints made using paper tape are stronger and less prone to defects than those made with fibreglass tape. For the strongest joint, paper tape is recommended with two coats of masta**base**, masta**longset** or masta**tape-in** and a final coat of masta**glide**, masta**lite** or masta**line**.
- If fibreglass tape is used, all joints must be back-blocked or backed by a framing member. Fibreglass tape is not permitted for use in wet areas or fire rated systems.
- If an air-drying compound is used for 3 coats, then all joints must be back-blocked or backed by a framing member.

Finishing (Third) Coat

Method

- Allow the second coat to set and dry, then lightly scrape off any lumps and high spots of compound
- Use a 280mm trowel to apply a third coat of compound [Refer to Figure 8 and to Figure 10 for minimum coat widths]
- Feather the joint edges to a smooth even surface, removing any excess
- Allow the compound to fully dry before sanding.

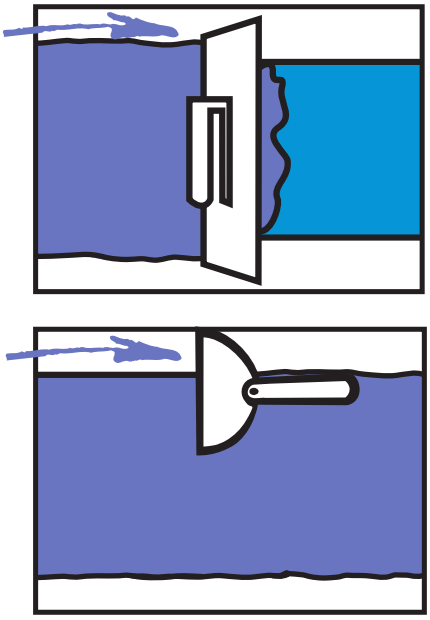

FIGURE 8 Finishing Coat

Fasteners

- For level 4 and 5 finishes, cover fastener heads with two coats of compound. Apply each coat in a different direction.
- For a level 3 finish, cover with one coat of compound.
- For fire rated systems, the setting of fasteners is not required for a level 3 finish.

Sanding

Method

- Lightly sand to a smooth even surface using 180 to 220 grit sandpaper or sanding mesh. [Figure 9]
- Do not expose or scuff the paper linerboard while sanding
- Use power sanders with care as they can easily over sand the joint
- A finished joint should have a slight crown.

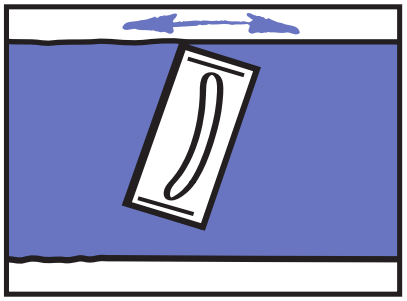

FIGURE 9 Sanding

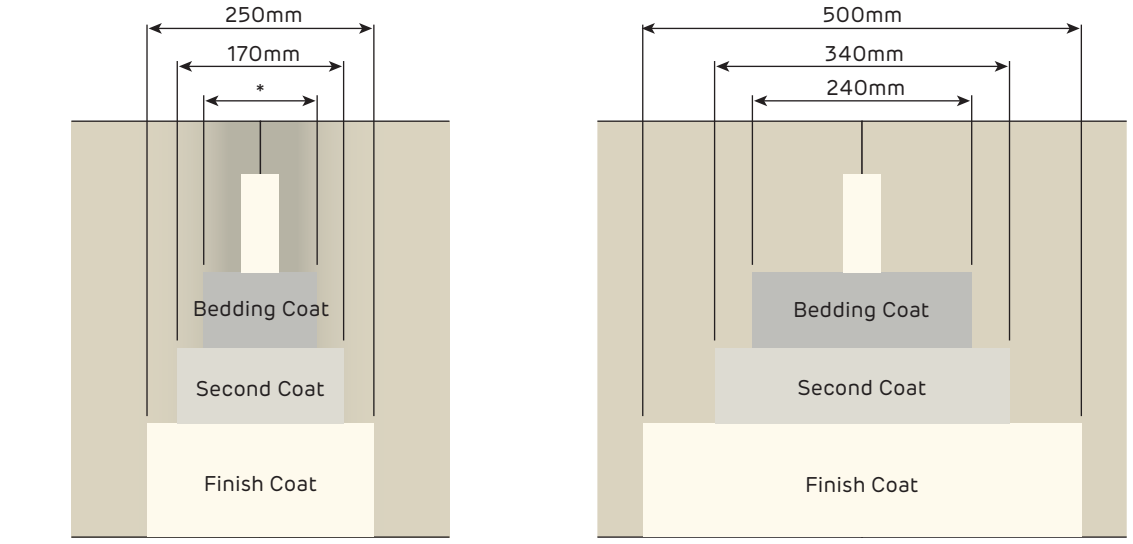

Recessed Joint and back-blocked Butt Joints
* Fill recess completely

Butt Joint made over a framing member

FIGURE 10 Minimum Coat Widths

Internal Corners

Method

- Use a 75mm broadknife to apply compound to the corner
- Fold paper tape in half and bed it into the compound using a corner taping tool
- Cover the tape with a thin coat of bedding compound and remove any excess. Allow to set or dry
- Apply a finish coat with a 100mm broadknife to both sides of the angle
- Feather the edges and finish the joint with an internal angle finishing tool. Allow to dry
- Lightly sand to a smooth finish before painting.

External Corners

Method

Position the Siniat corner bead ensuring that it is plumb and straight [Figure 11]

Fix the bead in place using fasteners or staples at 300mm centres on both sides.

For PVC corner beads, follow the manufacturer;s installation instructions.

Treat external corner beads with the three coat jointing system as described previously. The minimum width of the three coats on both sides of the external corner is:

- Bedding coat 200mm
- Second coat 230mm
- Finish coat 250mm.

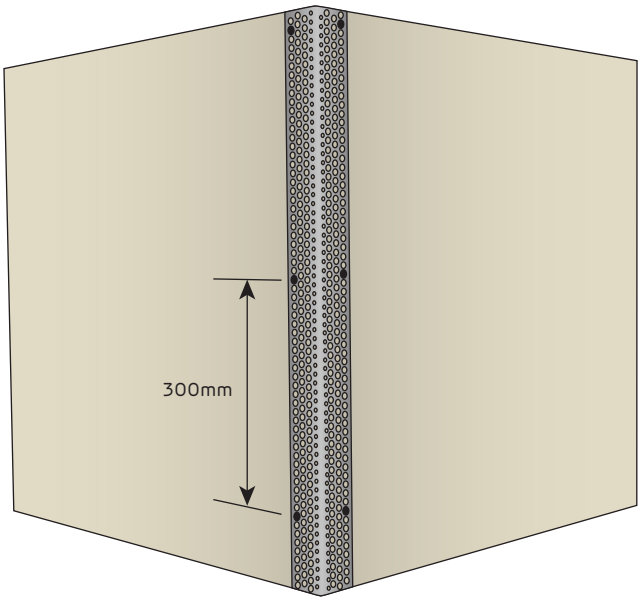

FIGURE 11 External Corner

7.4 Cornice Installation

Cornice is used to complete the decoration of the building. Cornice is fixed to walls and ceilings using cornice cements, which are chemical setting compounds available in powder form.

Cornice cements are selected depending on the length and stability of the setting time, as well as their features for practical application, such as the ability to work back the cornice cement, polish mitres and the instant grab strength.

Method

- Ensure that wall and ceiling surfaces are free of dust and dirt
- Measure and cut all cornices to the required lengths. Cut internal and external mitres using a mitre box
- Avoid joints in straight runs where possible. If necessary, mitred joints are recommended
- Measure and mark cornice projection on wall and ceiling to ensure accurate placement
- Mix only the quantity of cornice cement that can be used within the setting time
- Spread a 10mm continuous bead of cement along both back edges and the mitred end of the cornice [Figure 12]
- Press the cornice into place and if necessary hold with temporary nails in the wall and ceiling along the edges of the cornice [Figure 13]
- Clean off excess and remove nails when cement has partially set [Figure 14]
- Straight stop along cornice edge at wall and ceiling. Finish mitres using a small cornice tool [Figure 15]
- Wipe down the cornice with a wet sponge [Figure 16].

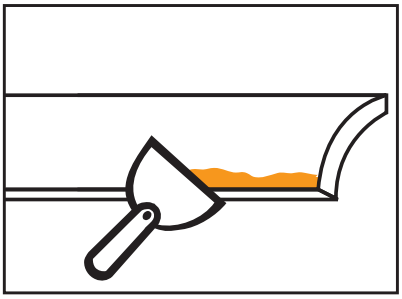

FIGURE 12 Butter Up

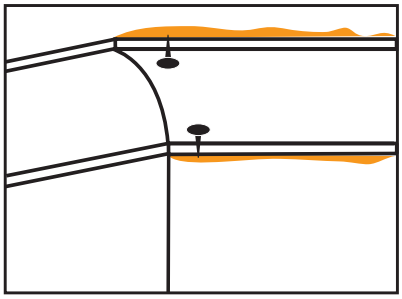

FIGURE 13 Position Cornice

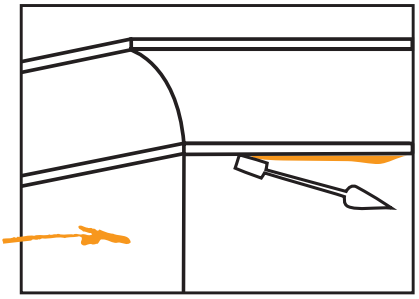

FIGURE 14 Clean Off Excess

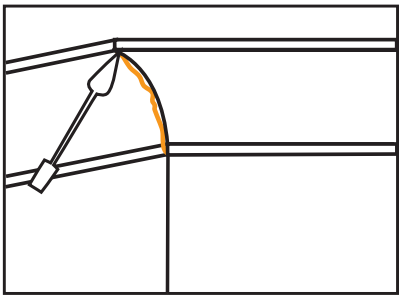

FIGURE 15 Mitres

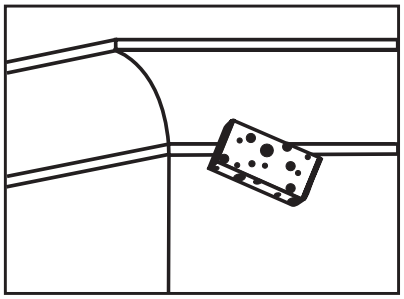

FIGURE 16 Wipe Down

Control joints in cornices shall coincide with control joints in linings

Table 4 Type and Use of Compounds - Cornice Cements

Compound	Type	Setting Time	Application		
		Minutes	Cornicing	Patching	Jointing (1st and 2nd coat)
Cornice Cements					
masta**cove45**	Chemical setting powder	45	✓	✓	
masta**cove75**	Chemical setting powder	75	✓	✓	
3-in-1 Specialty Compounds					
masta**fix20**	Chemical setting powder	20	✓	✓	✓

7.5 Painting Plasterboard

Australian Standard Requirements

Painting systems and methods are detailed in Australian Standard AS/NZS 2311, Guide to the painting of buildings.

If painting plasterboard, a **Three Coat Paint System** must be applied to achieve the best finish. This consists of a sealer undercoat followed by two top coats. Both the quality of the paint and how it is applied have a large effect on the finished appearance of the plasterboard.

Two coat paint systems are not nominated by AS/NZS 2311 as they often do not meet the customer's expectations by showing up joints through texture and sheen variations.

Sealer Undercoat Application

Recommendations

- Ensure surfaces are set and dry
- Lightly sand any minor surface defects and brush down surfaces to remove dust
- Apply a sealer undercoat suitable for plasterboard, preferably with a roller. Plasterboard that has been exposed to sunlight and/or is discoloured will require a stain sealer undercoat
- Ensure the quality sealer undercoat is rolled so all plasterboard paper fibres are flat
- Check for any unsuitable surface imperfections and repair
- Lightly sand with fine to medium grade paper before applying top coats

Paint Application

Recommendations

- Ensure surfaces are dry
- Lightly sand any minor surface defects and brush down surfaces to remove dust
- Apply paint to the broad areas with an appropriate 10-14 mm nap synthetic roller. The roller nap gives a slight texture that improves the overall evenness of finish
- Ensure each paint film is dry and manufacturer's recoat times are followed before applying the next coat.

If plasterboard is to be spray painted, the paint must not be diluted more than the manufacturer recommends. While the sealer undercoat is still wet, the surface should be back rolled to leave a 'roller finish'. This helps to equalise the surface texture between the plasterboard and the set joints. For best results also back roll 2nd and 3rd coats. Any minor paint touch-ups can then be done with a roller rather than having to re-spray.

Inspection

The final inspection of a plasterboard wall or ceiling occurs after painting. AS/NZS 2589 and AS/NZS 2311 recommend that visual inspection of finished surfaces of plasterboard be carried out in ordinary lighting, sighting from a distance of at least 1.5 metres from the surface. If differences of appearance are not clearly discernible the finish is usually considered acceptable.

To achieve a good quality painted finish, the following recommendations in addition to the three coat paint system should be followed:

- Apply paint according to the manufacturer's recommendations
- Avoid spraying or brushing which require advanced application techniques
- Choose white or light colours, flats for ceilings and matt or low sheen paints for walls
- Select a Level 5 Finish when using medium to high gloss or dark coloured paints, or in areas of glancing light in accordance with AS2589. These paints highlight any minor imperfections in the plasterboard and make the joints more visible.

For more information on glancing light, painting and other subjects affecting the appearance of plasterboard walls and ceilings, refer to:

- www.awci.org.au (Association of Wall and Ceiling Industries – Australia and New Zealand)
- www.apmf.asn.au (Australian Paint Manufacturers Association).

OnBoard - Painting Plasterboard

Read Siniat's OnBoard Technical Newsletter on Painting Plasterboard by clicking on the link or by using your phone's camera on the QR code.

7.6 Glancing Light

Glancing Light refers to natural or artificial light being cast along the face of a surface showing any minute undulation. As a result of this light being cast, a shadow is produced on the other side of the undulation. This draws attention to surface texture variations, such as plasterboard joints and patches, which under more diffused light would not be visible.

The glancing light condition can occur even when the wall or ceiling has been built according to AS/NZS 2589. Glancing light effects are directly linked to the type and placement of light sources relative to ceilings and walls.

Glancing light can highlight the following surface conditions:

- Sheet joints
- Surface irregularities
- Patches
- Variations in paint application technique.

Attention can also be drawn to minor deviations inherent in the manufacture and installation of plasterboard.

Minimising Glancing Light

Interior Design

The following are recommendations to reduce the effect of glancing light:

- Avoid full length windows in direct sunlight
- Avoid locating windows close to perpendicular wall and ceiling surfaces during design phase
- Diffuse light entering a room by using curtains, blinds or other window treatments
- Introduce curtains or blinds where windows are close to wall and ceiling surfaces
- Use low gloss, light coloured paints applied with a brush or roller.

Framing

Framing members should be straight and aligned.

Sheet Orientation

Plasterboard sheets should be fixed parallel to the light source. Also arrange the sheets to minimise the number of joints.

Lighting

Glancing light caused by artificial lighting can be addressed by changing the type and/or positioning of the light fittings. Natural lighting problems are normally caused by building geometry. An example is running windows right to the edge of the ceiling or wall line.

The following are recommendations for design of light fittings:

- Use recessed downlights and fluorescent tubes with a diffuser
- Shade batten-fixed bulbs on the ceiling and table lamps
- Avoid designs that will create glancing light conditions where possible
- Position downlights so that they do not shine down the surface of a wall.

For a premium Level 4 Finish use **opal**.

Level 5 Finish

A Level 5 Finish is the highest level of finish possible and can assist in reducing the effect of glancing light. By covering the entire surface, the skim coat of a Level 5 Finish fills any slight impressions in the surface, and removes the difference in texture and paint absorption between plasterboard and the joints. The framer, plasterer and painter all need to cooperate and contribute to providing a Level 5 Finish. Even when applied correctly, a Level 5 Finish is no guarantee that all surface deviations will be invisible, only minimised [Refer to Section 7.1 for details on Level 5 Finish].

OnBoard - Glancing Light

Read Siniat's OnBoard Technical Newsletter on Glancing Light by clicking on the link or by using your phone's camera on the QR code.



siniat

Etex Australia Pty Ltd
ABN 61 003 621 010

31 Military Road
Matraville NSW 2036

siniat.com.au

warranty

Siniat's products are guaranteed by a 10 year warranty.
For details visit siniat.com.au

customer service and technical advice

AU 1300 724 505